NOT TO BE ISSUED
OUT OF THE LIBRARY.

Digitized with financial assistance from the
Government of Maharashtra
on 18 July, 2018

BY Rao Saheb V. N. Mandlik

PART II.

# THE VYAVAHÁRA MAYÚKHA,

TRANSLATED FROM THE ORIGINAL,

WITH

REFERENCES TO THE MITÁKSHARÁ, THE VÍRAMITRODAYA, THE VYAVAHÁRA-MÁDHAVA, KAMALÁKARA, AND JÍMÚTAVÁHANA'S DÁYABHÁGA;

ALSO

# THE YÁJÑAVALKYA SMṚITI,

AN ENGLISH TRANSLATION AND NOTES.

WITH AN INTRODUCTION

ON THE SOURCES OF, AND APPENDICES CONTAINING NOTES ON VARIOUS TOPICS OF HINDU LAW.

BY

RAO SAHEB

VISHVANÁTH NÁRÁYAN MANDLIK, C.S.I., M.R.A.S.,

VICE-PRESIDENT, BOMBAY BRANCH ROYAL ASIATIC SOCIETY,
FELLOW OF THE UNIVERSITY OF BOMBAY,
PLEADER H. M. HIGH COURT, BOMBAY,
&c., &c., &c.

LIBRARY OF THE BOMBAY BRANCH OF THE ROYAL ASIATIC SOCIETY

॥ नहि सत्यात्परो धर्मः ॥

Trans.—"No *Dharma* greater than Truth."

Bombay:
PRINTED AT THE
EDUCATION SOCIETY'S PRESS, BYCULLA.

1880.

[*Copy-right and right of translation reserved.*]

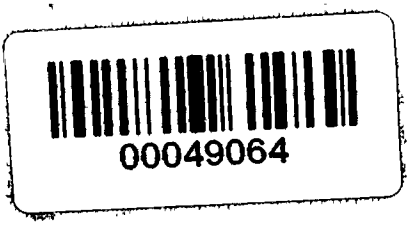
00049064

Mayukha
Yajnavalkya
49064
105.

# TABLE OF CONTENTS.


| | PAGE |
|---|---|
| INTRODUCTION ... ... ... ... ... ... ... | i—lxxxvii |
| VYAVAHÁRA MAYU'KHA ... ... ... ... ... | 1—156 |
| Salutation to Ganeśa ... ... ... ... ... ... | 1 |
| Definition of *Vyavahára* ... ... ... ... ... | 1 |
| Essentials of civil judicature ... ... ... ... ... | 2 |
| Evidence ... ... ... ... ... ... ... | 15 |
| Writings ... ... ... ... ... ... ... | 16 |
| Possession ... ... ... ... ... ... ... | 20 |
| Witnesses ... ... ... ... ... ... ... | 22 |
| Oaths ... ... ... ... ... ... ... ... | 30 |
| Determination of heritage ... ... ... ... ... | 31 |
| *Dáya* (Heritage) ... ... ... ... ... ... | 37 |
| Partition of heritage ... ... ... ... ... ... | 38 |
| Time of partition ... ... ... ... ... ... | 38 |
| Mode of partition ... ... ... ... ... ... | 40 |
| *Dattaka* (the adopted son) ... ... ... ... ... | 50 |
| Impartible property ... ... ... ... ... ... | 66 |
| Order of succession to obstructed heritage ... ... ... | 76 |
| Union after partition ... ... ... ... ... ... | 84 |
| *Stridhana* (a woman's property) ... ... ... ... | 91 |
| *Anamśas* (persons excluded from inheritance) ... ... | 99 |
| Recovery of debts (*Riṇádána*) ... ... ... ... | 102 |
| Pledges (*Ádhi*) ... ... ... ... ... ... ... | 105 |
| Sureties (*Pratibhu*) ... ... ... ... ... ... | 107 |
| Recovery of debts (*Riṇagrahaṇa*) ... ... ... ... | 109 |
| Deposits (*Nikshepa*) ... ... ... ... ... ... | 115 |
| Sale without ownership (*Asvámi-vikraya*) ... ... ... | 118 |
| Concerns among partners (*Sambhúya samutthána*)... ... | 121 |
| Resumption of gift (*Dattáprádánikam*) ... ... ... | 122 |
| Breach of a service-contract (*Abhyupetyá śuśrushá*) ... | 124 |
| Nonpayment of wages (*Vetanádanam*) ... ... ... | 127 |
| Transgression of a compact (*Samvid Vyatikrama*) ... ... | 129 |
| Rescission of purchase (*Krítánuśaya*) ... ... ... | 130 |
| Rescission of sale (*Vikriyásampradána*) ... ... ... | 131 |
| Disputes between the master and the herdsman (*Svámipála-viváda*) ... ... ... ... ... ... ... | 132 |

PAGE

Boundary disputes (*Símáviváda*) ... ... ... ... 134
Abuse (*Vákpárushyam*) ... ... ... ... ... 137
Assault (*Daṇḍaparushyam*) ... ... ... ... ... 139
Theft (*Steyam*) ... ... ... ... ... ... 141
Heinous offences (*Sáhasam*) ... ... ... ... ... 144
Adultery (*Strisangrahaṇam*) ... ... ... ... ... 149
Duties of man and wife (*Stripun dharmáh*) ... ... ... 153
Gambling and prize-fighting) *Dyúta-samáhvayam*) ... 153
Miscellaneous (*Prakírṇam*) ... ... ... ... ... 154

YÁJNAVALKYA—DHARMAŚÁSTRAM ... ... ... ...157—274

ACHÁRÁDHYÁYA (Chapter I.) ... ... ... ... ... 157
Introduction ... ... ... ... ... ... 157
*Samávartanam* ... ... ... ... ... ... 167
Marriage ... ... ... ... ... ... ... 167
Disquisition about castes. ... ... ... ... 173
Duties of a householder ... ... ... ... ... 174
Duties of a student ... ... ... ... ... 178
Things fit and unfit to be eaten... ... ... ... 183
Purification of things ... ... ... ... ... 184
Gifts ... ... ... ... ... ... ... 186
Oblations to the manes ... ... ... ... ... 187
Worship of Gaṇapati ... ... ... ... ... 193
Propitiatory rites for *Grahas* (Planets)... ... ... 195
Duties of a king ... ... ... ... ... ... 196

VYAVAHÁRÁDHYÁYA (Chapter II.) ... ... ... ... 201
Civil judicature ... ... ... ... ... ... 201
Recovery of debts ... ... ... ... ... 204
Deposit ... ... ... ... ... ... ... 207
Witnesses ... ... ... ... ... ... ... 208
Writings ... ... ... ... ... ... ... 209
Ordeals ... ... ... ... ... ... ... 210
Partition of heritage ... ... ... ... ... 212
Boundary disputes ... ... ... ... ... 225
Master and the herdsman ... ... ... ... 227
Sale without ownership ... ... ... ... ... 228
Resumption of gift ... ... ... ... ... 228
Rescission of purchase ... ... ... ... ... 229
Breach of a service-contract ... ... ... ... 229
Transgression of a compact ... ... ... ... 230
Non-payment of wages ... ... ... ... ... 231
Gambling and prize-fighting ... ... ... ... 231
Abuse ... ... ... ... ... ... ... 232

PAGE

Assault ... ... ... ... ... ... ... 233
Heinous offences ... ... ... ... ... ... 235
Concerns among partners ... ... ... ... 239
Theft ... ... ... ... ... ... ... 239
Adultery ... ... ... ... ... ... ... 241
Miscellaneous ... ... ... ... ... ... 243
PRÁYASCHITTÁDHYÁYA (Chapter III.) ... ... ... ... 245
Impurities ... ... ... ... ... ... 245
Duties under distress ... ... ... ... ... 248
Duties of a hermit ... ... ... ... ... 249
Duties of an ascetic ... ... ... ... ... 250
Penance for drinking ... ... ... ... ... 266
Theft of gold ... ... ... ... ... ... 266
Violation of the preceptor's bed ... ... ... 266
Penance for intercourse with a sinner ... ... ... 267
Secondary sins ... ... ... ... ... ... 267
Miscellaneous penances ... ... ... ... ... 270
The abandonment of the degraded ... ... ... 270
Secret expiations ... ... ... ... ... ... 271
Definitions of penances ... ... ... ... ... 272
APPENDIX I. ... ... ... ... ... ... ...275—330
Analysis of eighteen Smritis ... ... ... ... 275
Atri ... ... ... ... ... ... ... 275
Vishnu ... ... ... ... ... ... ... 278
Hárítá ... ... ... ... ... ... ... 283
Uśanas ... ... ... ... ... ... ... 289
Aṅgiras ... ... ... ... ... ... ... 292
Yama ... ... ... ... ... ... ... 295
Ápastamba ... ... ... ... ... ... 297
Samvarta ... ... ... ... ... ... ... 300
Kátyáyana ... ... ... ... ... ... ... 302
Brihaspati ... ... ... ... ... ... ... 304
Paráśara ... ... ... ... ... ... ... 306
Vyása ... ... ... ... ... ... ... 311
Saṅkha ... ... ... ... ... ... ... 314
Likhita ... ... ... ... ... ... ... 315
Daksha ... ... ... ... ... ... ... 316
Gautama ... ... ... ... ... ... ... 317
Śátátapa ... ... ... ... ... ... ... 324
Vasishṭha ... ... ... ... ... ... ... 326
APPENDIX II. ... ... ... ... ... ... ...331—345
Public charities ... ... ... ... ... ... 331

PAGE

APPENDIX III.—*Sapiṇḍa* relationship ... ... ...345—394
Section I.—Marriage... ... ... ... ... 346
Section II.—Impurity on account of birth or death 356
Section III.—Inheritance ... ... ... ... 357
APPENDIX IV.—Customary Law ... ... ... ...395—516
Section I.—Marriage ... ... ... ... ... 395
Section II.—Adoption ... ... ... ... 454
Concluding Remarks ... ... ... ... ... 516
INDEX ... ... ... ... ... ... ...517—532

# INTRODUCTION.

In presenting the following translations of the Vyavahára Mayúkha of Bhaṭṭa Nílakaṇṭha and the Smṛiti of Yájñavalkya, together with a few notes on Áryan (or Hindu) Law in the form of Appendices, I have to make a few preliminary remarks.

The Hindu Law is the law of the *Árya* community in India. As it is at present understood and administered in courts of justice, it is but a small fragment of the entire body which is properly known as the Dharmaśástra. This is now ordinarily divided into three divisions of Áchára, Vyavahára, and Práyaschitta. I say *now*, because, strictly speaking, such a distinct partition of the Dharmaśástra into several distinct departments was not quite settled till the time of the later Smṛiti-writers, and particularly Yájñavalkya, Manu, Nárada, and Gautama. Yájñavalkya, Paráśara, and other Smṛitis are divided into different Adhyáyas, and each Adhyáya has been divided into *prakaraṇas* (sections). These distinct sections have been used separately for their various purposes, and yet always with the central idea of *Dharma* being kept in view, and as parts of a whole. Vyavahára, apart from Áchára, (which latter includes Práyaschitta,) is not considered by the people in their daily concerns, and it is only during very recent years that sometimes administrators have shown a tendency to work these divisions like so many Acts of a modern and temporal legislature. The object of early Áryan writers has been more to inquire and lay down the rules for Áchára and Práyaschitta than about Vyavahára (or the Civil law). The last has always been considered a very minor matter; for, as might naturally be expected, sages who extolled the virtues of an ascetic, or a house-holding ascetic who kept food for only twelve days in his house,[1] could not be expected to provide a complicated and laborious scheme of succession. The erection of fresh hermitages was always contemplated at each marriage, and marriage itself was inculcated simply as a means to a spiritual end.[2] Again, when the life of the Árya began with the study of the Vedas, and ended with an immediate abandonment of the world and entrance into the fourth

[1] Yájñavalkya, I. 128, see Part II., p. 178; Mitákshará leaf 19, p. 2.

[2] Bhágavata Puráṇa, *Skandha* 11, *A'dhya'ya* 4, v. 11, leaf 15, p. 1.

order, whenever the student was sufficiently subdued in his passions and desires,[1] the modern views either of law or social system could not be expected to prevail. It need not surprise us accordingly if we occasionally find a want of harmony between the ideas of the nation of the present day and the Spirit of the Sacred ordinances of the Vedas and Smritis. While it would be correct to say that there is perhaps no other nation on earth which has preserved so much of its antiquity intact as the Áryans of India, it is not right to assert that they have been perfectly stationary in all respects. The simultaneous existence of perfect conservatism in regard to some institutions and a wide departure from the old grooves in others is a circumstance which is often not clearly realised by foreigners; and hence it is that some of our administrators are found either trying to restore us according to their notions to the pristine simplicity of our old institutions, or going to the other extreme and unduly giving effect to their own theories of progress by trying to adapt our old texts to the modern ideas of European civilization. Either process is in my opinion fraught with evil. Thus a Hindu or Áryan householder, directly he enters the married state, is commanded to have his own sacrificial fires.[2] He has his own sphere of duties, marked out for him up to the point of final emancipation. Even in worldly matters he is advised to live separate, to have his own daily fire-sacrifices, and to live as the head of his own family. Hindu society has more or less conformed to these principles. In provinces where the mercantile elements preponderate, and questions of the collection and distribution of wealth chiefly arise, segregation of interests is the rule and congregation the exception. This is well understood by the community; how far it is followed by our courts, our readers must inquire and judge for themselves. Again, according to the Áryan code, there is no provision of law clearer than that a Bráhmaṇa's wealth can only be inherited by Bráhmaṇas.[3] This was followed for a long time, but in the year 1860 the Hindu law was set aside, and the common law of England was declared to govern the case.

Other instances of a misapprehension, or improper application of the law, will be noticed in their places further on. These arise, as it seems

---

[1] Nirṇayasindhu, 2nd half. Pari. iii. l. 51 p. 2, l. 9:—यदहरेव विरजेत्तदहरेव प्रव्रजेत् ॥

[2] Yájñavalkya I., 102 and 103, Part II. p. 175; Mitákshará, I., leaf 16, p. 2; Mayúkha, Part II. p. 73 lines 32, 33; Manu, Bṛihaspati and Prajápati quoted by Mitra Miśra (see Vír. l. 172 p. 1).

[3] Manu ix. 189:—

अहार्यं ब्राह्मणद्रव्यं राज्ञा नित्यमिति स्थितिः । इतरेषां तु वर्णानां सर्वाभावे हरेन्नृपः ।

Translation:—"The property of a Bráhman shall never be taken *as an escheat* by the king; this is a fixed law: but the wealth of the other classes on failure of all heirs the king may take."

(8 Moore's Indian Appeals, 500.) *The Collector of Masulipatam* v. *Cavaly Venkata Narainappa.*

to me, from a very contracted view of the Áryan law. It is useful, therefore, to enquire what this law is and has been. Taking the Dharmaśástra in its proper sense, it may be laid down to be the law of the Áryas. The question naturally arises—who were the Áryas, and who their present representatives are? Some have confined the term Árya to the three twice-born classes.[1] Is it so fixed? Has it been so always?

The Vedic origin of the four classes of Áryas as detailed in the Purushasúkta[2] is well known. The occurrence of this hymn in the last or 10th *Maṇḍala* has been commented on. But the *Panchakshiti* (consisting of the four classes, together with the Nisháda) occurs in the earlier Maṇḍalas of the *Rig-veda*;[3] and although the origin of the four classes as detailed in the Purushasúkta may be open to remark, the mention of four classes even in the earlier portions of the Rig-veda, and the early part of the Taittiríya or the Black Yajur-veda,[4] proves their existence in those early times.

Again, the Áryas are known as the inhabitants of a certain tract of country named Áryávarta. But this has been of indefinite extent. Manu, as expounded by Bhṛigu, indeed lays down its limits with apparent definiteness in ch. ii. v. 22;[5] but in defining the 'sacrificial country,' or *Yájñiyadeśa* as it is called in Sanskrit in a very vague way in the next following verse,[6] it appears to me that Manu, or rather his pupil Bhṛigu, owns that in his time the Áryas had not confined themselves to what was technically called the Áryávarta as defined in the preceding verse. For by *Yájñiyadesa* he evidently means what the word Áryávarta would etymologically import;[7] because the performance of sacrifices according to Manu was a privilege of the Áryans alone. Again,

[1] Rig-veda Samhitá, X. 38, 3, where the word occurring in juxtaposition with दास (*Dása*) has been held by Sáyana to mean one of the three regenerate classes. The word occurs in several places in the Rig-veda, and whenever it occurs along with the word *Dása*, Sáyana has interpreted it as यज्ञकर्मकृत् *Yajñakarmakṛit*, or as one entitled to perform sacrifices, thus excluding the Śúdra. (See for example Rig-veda VI. 25, 2.)

[2] Rig-Samhitá x. 90, 12. The same origin is given in the Black Yajush-Samhitá *kaṇḍa* vii, *Adhyáya* i, *Anuváka* i.

[3] See the Rig-veda I. 7, 9 and I. 176, 3; VII. 75, 4; VII. 79, 1.

[4] इन्द्रं वो विश्वतस्परिहवामहे जनेभ्यः। अस्माकमस्तु केवलः तै० कृ० यजु: संहिता," का० १ प्र० ६-अ० १२, (Cal. ed.) page 982. Again, see page 1059 of the same volume "ये यज्ञाः पञ्च जनानां येषां तिस्रः परमजाः। ई०" and comments thereon.

[5] The verse runs thus:—

आसमुद्रात्तु वै पूर्वादासमुद्रात्तु पश्चिमात्। तयोरेवान्तरं गिर्योरार्यावर्तं विदुर्बुधाः॥

Translation:—"As far as the eastern, and as far as the western oceans between the two mountains just mentioned, lies the tract which the wise have named *Aryávarta*, or *inhabited by respectable men.*"

[6] For text and translation of the verse see above p. 158, ll. 8—10.

Kulúka explains its etymology as follows: आर्या अत्रावर्तन्ते पुनः पुनरुद्भवन्तीति आर्यावर्तः translation:—'Áryávarta [is so called] because Áryas are here successively born.'

the limits assigned by the Rámáyaṇa of Válmíki I. 40, 4—6 to the 'sacrificial country' are identical with those of the technical Áryávarta of Manu. The Víramitrodaya in its comments on verse 2 of Yájñavalkya chap. i., says that the country therein indicated is the whole Bhárata-varsha.[1]

The Mahábhárata Karṇaparva, Adhyáya 40, vv. 20—43 (Bombay ed. l. 74 p. 1) mentions certain districts which were inhabited by Áryas, and yet were considered as unsuited to the performance of sacrifices. On the other hand, the Vyaṅkaṭeśa Máhátmya[2] (a part of the Váráha Puráṇa) states that certain districts very near the Cape Comorin and certain other islands, were inhabited by the Áryas. All these facts confirm what there are other independent grounds for holding—namely, that the original limits for the residence of Áryas were gradually extended, so as to include the whole of Bhárata Varsha, which the references[3] in the footnote show to be identical with the Hindusthána of the present day. The following *Sútra* of Páṇini, together with the glosses

---

[1] MS. leaf 4.

[2] The verses (ch. 26, vv. 30 to 32) run thus:—

आर्यास्तु रुक्षमालाख्या गौडवङ्गाः कलिङ्गकाः ।
आन्ध्रकर्णाटदेशीयाः कौसलाद्भुतमानुषाः ॥ ३० ॥
चोलाश्चोलश्च (?) पाण्डयाश्च नानादेशसमुद्भवाः ।
द्वीपान्तरगताश्चापि व्यङ्कटेशमहोत्सवे ॥ ३१ ॥
धारयन्तो महाभक्तिमागमिष्यन्ति कोटिशः ।
सर्वे लब्ध्वा वरं चेष्टं भविष्यन्ति मुदान्विताः ॥ ३२ ॥

[3] The references are taken from the Vratakhaṇḍa of Hemádri, pp. 26 to 29:—

मार्कण्डेयपुराणे.

भगवन्कथितस्त्वेष जम्बुद्वीपः समासतः । यदेतद्भवता प्रोक्तं कर्म नान्यत्र पुण्यदम् ॥ पापदं वा महाराज वर्जयित्वा तु भारतम् । इतः स्वर्गश्च मोक्षश्च मध्यं चान्तश्च गम्यते ॥ न खल्वत्र मनुष्याणां भूमौ कर्म विधीयते । योजनानां सहस्रं वै द्वीपोयं दक्षिणोत्तरात् ॥ पूर्वे किराता यस्यान्ते पश्चिमे यवनाः स्मृताः । दक्षिणे मलयो यस्य हिमवानुत्तरे तथा ॥ तदेतद्भारतं वर्षं सर्वबीजं द्विजोत्तम । ब्रह्मत्वममरेशत्वं देवत्वमपि दुर्लभम् ॥ मृगपक्ष्यौषधिचरा योनिस्तद्वदतोऽश्नुते । स्थावराणां च सर्वेषामतो ब्रह्मन् शुभाशुभे ॥ प्रयान्ति कर्मभूर्ब्रह्मन् नान्यलोकेषु विद्यते । स्वर्गापवर्गप्राप्तिश्च पुण्यं पापं च * वै तथा ॥

* तथैव चेति क्वचित्

विष्णुपुराणे.

उत्तरं च समुद्रस्य हिमाद्रेश्चैव दक्षिणम् । वर्षं यद्भारतं नाम भारती यत्र सन्ततिः ॥

वसिष्ठः

धर्म आर्यावर्ते प्रागादर्शात् प्रत्यगालोकाचलादुदक् कुमारिकाया दक्षिणेन हिमवत उत्तरेण विन्ध्याद्रेर्ये धर्मा ये चाचारास्ते सर्वे प्रत्येतव्याः नत्वन्ये प्रतिलोमकधर्माः एनमार्यावर्तमित्याचक्षते गङ्गायमुनयोरन्तरालमप्येके यावद्वा कृष्णमृगो विचरति तावद्ब्रह्मवर्चसम् ॥

पैठीनसिः

आहिमवत आकुमार्य्याः सिन्धुवैतरणी नदी सूर्यस्योदगयनं पुनः यावद्वा कृष्णमृगो विचरति तत्र धर्मश्चतुष्पादो भवति ॥

संवर्तः

स्वभावाद्यत्र चरति कृष्णसारः सदा मृगः । धर्मदेशः स विज्ञेयो द्विजानां धर्मसाधनम् ॥

विष्णुः

चातुर्वर्ण्यव्यवस्थानं यस्मिन् देशे न विद्यते । तं म्लेच्छदेशं जानीयादार्यावर्तस्ततः परम् ॥

thereon, contains important observations on the limits of the Áryan society and its divisions, and especially in reference to the Súdras :—

शूद्राणामनिरवसितानाम् । पाणिनिः अध्यायः २ पादः ४ सूत्रम् १०.

वृत्तिः—यैर्भुक्ते पात्रे संस्कारेणापि न शुध्यति ते निरवसिताः । तद्विन्ना ये शूद्रास्तद्वाचिनां द्वन्द्व एकवत्स्यात्.

भाष्ये द्वितीयाध्यायस्य चतुर्थपादे द्वितीयम् ह्निकम्—शूद्राणामनिरवसितानाम् । अनिरवसितानामित्युच्यते । कुतोऽनिरवसितानाम् । आर्यावर्तादनिरवसितानाम् । कः पुनरार्यावर्तः । प्रागादर्शात्प्रत्यक्कालकवनाद्दक्षिणेन हिमवन्तमुत्तरेण पारियात्रम् । यद्येवं किष्किन्धगान्धिकं शाकयवनं शौर्पकौञ्चमिति न सिध्यति ॥ एवं तर्ह्यार्यनिवासादनिरवसितानाम् । कः पुनरार्यनिवासः । ग्रामो घोषो नगरं संवाहः संस्त्याया इति । एवमपि य एते महान्तः संस्त्यायास्तेष्वभ्यन्तराश्चाण्डाला मृतपाश्च वसन्ति । तत्र चाण्डालमृतपा इति न सिध्यति ॥ एवं तर्हि यज्ञात्कर्मणोऽनिरवसितानाम् । एवमपि तक्षायस्कारं रजकतन्तुवायमिति न सिध्यति ॥ एवं तर्हि पात्रादनिरवसितानाम् । यैर्भुक्ते पात्रे संस्कारेण शुध्यति ते ऽनिरवसिताः । यैर्भुक्ते पात्रे संस्कारेणापि न शुध्यति ते निरवसिता इति.

कैयटकृतभाष्यप्रदीपः—

शूद्राणाम् । निरवसिता बहिष्कृता उच्यन्ते । तत्रावधिप्रश्नः । कुत इति । प्रागादर्शादिति । आदर्शादयः पर्वतविशेषाः । दक्षिणेनेति एनबन्तः । एनप् द्वितीया । प्रागादिभ्यः प्रथमान्तेभ्यो देशवृत्तिभ्यः प्रत्ययो विहितः । एतन्मर्यादत्वचतुष्टयमध्य आर्यावर्तो देश इत्यर्थः । यद्येवमिति । एतेषामार्यावर्तावच्छेदकत्वादिति भावः । ग्राम इति । एतेष्वार्या निवसन्तीति भावः । तत्र ग्रामः प्रसिद्धः । घोषो गोमहिष्यादिनिवासः । संवाहो वणिक्प्रधानः । संस्त्याया इति निवासविशेषा इत्यर्थः । मृतपा डोम्बा इत्याहुः । यज्ञादिति । शूद्राणां पञ्चयज्ञानुष्ठाने ऽधिकारो ऽस्तीति भावः । तक्षायस्कारमिति । तक्षादीनां यज्ञेऽधिकाराभावादिति भावः । संस्कारेणेति । यः संस्कारः स्मृतिकारैर्द्रव्यशुद्धौ पण्डितस्तेनैव न तदभिकेनेत्यर्थः

नागोजीभट्टकृतभाष्यविवरणम्—

शूद्रशब्दोऽत्रसूत्रे त्रैवर्णिकेतरपर इति बोध्यम् ।

*Translation.*

Pánini Adhyáya ii., Quarter iv., Sútra x.

[In the case] of unexpelled Súdras, [the copulative compound is always of the *Samáhára* kind.]

*Vyitti.*—They are [said to be] *niravasita* [expelled] whose dish after meals is not purified even by the [prescribed] means. In the case of words importing Súdras other than these, the copulative compound is in the singular.

The Mahá Bháshya of Patañjali, Adhyáya ii., quarter iv., Áhnika ii.—[In the Sútra] 'of unexpelled Súdras,' [the word] *aniravasitánám* (of unexpelled) is used. What [is it from which] non-expulsion [is meant],' [It may be] 'not expelled from Aryávarta [the country of the Áryas].' But what is Áryávarta? [The country] to the east of Ádarśa, to the west of Kálakávana, to the south of the Himalayas, and to the north of Páriyátra. If so, [the *Samáháradvandva compounds*] *Kishkindhagandhikam* (*Kishkindha* and *gandhika*) *Sakayavanam* (*Saka* and *yavana*) and *Saurpakraunchum* (*Saurpa* and *krauncha*) cannot be explained; [because, says Kaiyata, all these are tribes of Súdras living outside the Áryávarta]. If so, then [let the meaning be] 'not expelled from the habitations of Áryas.' But what is a habitation of the Áryas? A village, a station for herdsmen, a town, a locality of traders. If so, then in the midst of large mansions, *Chándálas* and *Mritapas* [often] live and [the *itaretarayogadvandva* compound] *Chánálamritapáh* (*Chanálas* and *mritapas*) cannot be explained. *Mritapas* is explained by Kaiyata as those who are known by the name of *Dombás* in the vernaculars; and by Nágojíbhatta as those who living in the vicinity of a cemetery take the clothes, fuel, &c. on

a corpse.] If so, then [let the meaning be] 'not expelled [or debarred] from sacrificial rites.' In this way, too, [the *Samáhára dvandva* compounds] *takshâyaskâram* (a carpenter and an ironsmith), *rajakatantuvâyam* (a washerman and a weaver) cannot be explained. If so, then [let the meaning be] 'those are *anirâvasita* (not expelled) whose dish after meals is purified in the [prescribed] ways; and those are *nirâvasita* (expelled) whose dishes after meals cannot be purified even by the prescribed means.

[To avoid repetition, the passage of Kaiyata is here not translated, as its operative part is already translated in the translation of the passage from the Bhâshya.]

Nágojíbhaṭṭa's Bhâshya Vivaraṇa.—It should be understood that the word Śúdra stands in this Śutra for one not belonging to the three *varṇas* (classes).

The above shows that at the time of Patañjali, the Áryas had no confined definite spot as their peculiarly sacred place.

The test of determining the Áryas from their place of habitation being thus found unsatisfactory, the next test that occurs is to find out their classes and the determination of their limits. It is suggested that the four divisions mentioned in the Rig-veda (x. 90); the Vajasaney Samhitá of the Yajurveda (xxxi. 1—16), the Atharvaveda (xix. 6), the Bhagavadgítá (iv. 13), the Bhágavata Puráṇa (iii. 6, 30—34,) the Bṛihadáraṇyaka (i. 4,) and Manu (i. 31), are meant to be the divisions of the Áryan community; but as this is not the place to enter into a disquisition either on the 'castes' or the classes of 'Áryas,' I content myself for the present by saying that even this test is at the present time quite unsatisfactory. At the time of Manu's Code, or rather Bhṛigu's version of Manu, an attempt to exclude the S'údra from the pale of Áryanism is clearly observable (see for instance ch. x. 66, 67, and 69; and ch. ii. v. 39). But it would also appear that the process of segregation was not then so far advanced, as it is now; for in several places, the S'údra does appear to be included within the sacred line (see ch. v., v. 139 and ch. x., v. 57). There must have been some confusion of classes in the time of Manu which has further developed itself in modern times; for, according to some Puráṇic accounts, the intermediate classes of the Kshatriyas and Vaiśyas have entirely disappeared; and the first and the last classes have been split up into so many subdivisions, that it is now hard to determine whether a certain individual does or does not come within the pale of the Áryan law. The Puráṇic view may, to a certain extent, be correct as regards the Śúdras. But, as far as the history of the different provinces of India shows, both Kshatriyas and Vaiśyas do exist, although they again have sub-divided themselves, and have degenerated in their practices like the other Áryan classes.

For the benefit of the Árya community as above described, the *Śruti* or the Vedas furnished a body of law prescribing the ritual. The Veda in its threefold division of (1) Sanhitá, (2) Bráhmaṇa, and (3) the Áraṇyaka regulated the different stages of the ceremonial. But even in those early times, usage or custom seems to have supplied the basis

of the law, for, as Bhíshma observes in the Mahábhárata, usage or practice is the root of all Dharma.[1]

The words of Śankara that *áchára* is the source of authority in all matters of Dharma must be always kept in view.[2] This done, we may now examine the sources of the Vedic law as founded by the Áryas.

The whole of the Veda seems to have been one work—afterwards divided into four, Rich, Yajush, Sáman, and Atharvan.

Some writers take the number of Vedas to be three, and leave Atharvan out of account.[3] Others again place this Veda in the same category as the first three, as having been separated and arranged by Vyása.[4] That it is one of the four Vedas is undoubted,[5] and its non-inclusion in the sacrificial scheme is well accounted for by the constitution of the triplicate ceremonial so well explained by Sáyaṇa in his introduction to the Ṛig-Veda. Each of these four Vedas has many *śákhás* or branches. According to the Charaṇa-Vyúha current amongst the followers of the Ṛig-Veda in these parts, the Ṛig-Veda has five branches; the Yájush has two divisions, the black and the white; the first has eighty-six, and the second fifteen branches; the Sáman has one thousand branches; and the Atharvan has nine. Of these very few now exist. A commentary on the Charaṇavyúka gives the following account of the extent of the different *Śákhás* in different parts of India[6]:—

'तत्र प्राच्य उदीच्यां नैर्ऋत्यस्तत्र वाजसनेयानां पञ्चदश भेदा भवन्ति प्राच्य उदीच्यनैर्ऋत्यस्त्रिस्रो दिशायां (?) वाजसनेयवेदोत्पत्तिः ॥ महार्णवे ॥ पृथिव्या मध्यरेखा च नर्मदा परिकीर्तिता ॥ दक्षिणोत्तरयोर्भागे शाखाभेदश्च उच्यते ॥ १ ॥ नर्मदादक्षिणे भागे आपस्तम्बाश्वलायनौ ॥ राणायनी सिप्पला च यज्ञकन्यविभागिनः ॥२॥ माध्यन्दिनी शाङ्खायनी क्रौथुमी शौनकी तथा ॥ नर्मदोत्तरभागे च यज्ञकन्यविभागिनः ॥ ३ ॥ तुङ्गा कृष्णा तथा गोदा सह्याद्रिशिखरादधि ॥ आ भान्द्रदेशपर्यन्तं बह्वृचश्वाश्वलायनी ॥४॥ उत्तरे गुर्जरे देशे वेदे बह्वृचकीर्तिनः ॥ कौथीनकी ब्राह्मणं च शाखा शाङ्खायनी तथा ॥५॥ आन्ध्रादिद्राविणप्रायेगोदासागरकावधि ॥ यजुर्वेदस्तु तैत्तिरीयो (?) आपस्तम्बी प्रतिष्ठितः ॥ ६ ॥ अथर्वणः

[1] विष्णुसहस्रनाम— महाभारत० आनु० अ० १४९ श्लो० १३७

सर्वागमानामाचारः प्रथमं परिकल्पते ॥ आचारप्रभवो धर्मो धर्मस्य प्रभुरच्युतः ॥

Translation:—Among all the *ágamas* or Vedic precepts or principles, *áchára* or custom is reckoned the first; from *áchára* arises *Dharma*; and Achyata is the lord of Dharma.

On this Śankara observes— "सर्वागमानामाचारः प्रथमं परिकल्पते । आचारप्रभवो धर्मो धर्मस्य प्रभुरच्युत इत्यनेनैवान्तरवाक्येन सर्वधर्माणामाचारवत एवाधिकार इति दर्शयति ॥ "

[2] See Ápastamba Dharma Sútra, 2, 6, 15. 1, p. 73, vol. I., and p. 84 of vol. II.

[3] See Amara, I., 6, 3 (Bombay Ed. p. 35); Sáyaṇa's Introduction to Ṛig-Veda, vol. I., 2; Pushpadanta's Mahimna, verse 7, " त्रयी सांख्यं योगः इ० "

[4] The Bhágavata Puráṇa, I., iv., 14-24, leaf 10, p. 2, and l. 11, p. 1.

[5] Patanjali's Mahábháshya, in the Paspaśánhika, leaf 3, p. 2. See the excellent introduction of Dr. Rájendralál Mitra to the Gopatha Bráhmaṇa of the Atharva Veda (Calcutta, 1872).

[6] See note 3 p. 33. See also Satyáshádha Sútra, 1st Adhyáya, 1st Sútra :—

यज्ञं व्याख्यास्यामः स त्रिभिर्वेदैर्विधीयते ॥ ऋग्वेदेन यजुर्वेदेन सामवेदेनच ॥ तत्र ऋग्वेदेन होता करोति यजुर्वेदेनाध्वर्युः सामवेदेनोद्गाता ॥

ज्ञातृहोतॄणां सन्ति सूत्राण्यनेकशः ॥ यत्रास्ति यौनिसंबन्धे सूत्रज्ञातिकलान्वितः ॥ ७ ॥ सह्याद्रिपर्वतारभा-दिशां नैर्ऋत्यसागरान् ॥ हिरण्यकेशी शाखा च परशुरामस्य सन्निधौ ॥८॥ मयूरपर्वताच्चैव यावद्गुर्जरदे-शतः ॥ व्याप्ता वाध्वर्यदेशे तु मैत्रायणी प्रतिष्ठिता ॥ ९ ॥ अङ्गवङ्गकलिङ्गाश्च कानीनो गुर्जरस्तथा ॥ वाजसनेयशाखा च माध्यन्दिनी प्रतिष्ठिता ॥ १० ॥ ऋषिणा याज्ञवल्क्येन सर्वदेशेषु विस्तृता ॥ वाजस-नेयवेदस्य प्रथमा काण्वसंज्ञका इति ॥ ११ ॥'

Translation :—" Of the Vajasaneyins living in the east, the north, in the south-west, there are fifteen divisions. In the said three quarters the Vájasaneya Veda was originated. The Mahárṇava [states the following] : The Narmadá is declared to be the middle line (equator) of the earth. The different *śákhás* [existing] on the north and south of it will [here] be declared. In the regions south of the Narmadá, [the *Śákhás*] Ápastambí, Áśvalayaní, Ráṇáyaní, and Pippalá [exist, the followers whereof are] sharers in respect of sacrifices and marriage [*i.e.* are an exclusive community in the said respects]. In the regions north of the Narmadá, the Mádhyandiní, Śaṅkháyaní, Kauthumí, and Śaunakí are sharers in respect of sacrifices and marriages. Up to the Tungá, Krishṇá, Godá, the summit of the Sahyádri, and the Ándhra country the Áśvalayaní of the Ṛig-Veda [prevails]. In the northern Gurjar country, the Veda is declared to be the Rich, the Bráhmaṇa Kaushítakí, and the *śákhá* Śaṅkháyaní. Commencing from the Andhra country in the south-east direction, and up to the Godá and the sea, the Tattiríya Yajur-Veda, and [its] *śákhá* Ápastambí prevails. The Adhvaryus, the Udgatṛis, and the Hotṛis have several Sútras, [but] where the Sútra, caste, and the occupation is [similar], there [alone] marriage [will take place]. Commencing from the Sahyádri in the south-western direction, up to the sea, the Hiraṇyakeśí *śákhá* prevails, in the vicinity of Paraśuráma. From the Mayúra mountain up to the Gurjara country in the north-western direction, Maitráyaṇí [prevails]. [In the countries named] Aṅga, Vaṅga, Kaliṅga, Káṇina, and Gurjara, the [*śákhá*] Mádhyandiní of the Vájasaneyi [Veda, prevails]. The first *śákhá* of the Vájasaneya, named Káṇva, has been spread by sage Yájñavalkya over all countries."

Practically the following are the principal Sákhás now existing in these parts[1] :—

| | Śákhá. |
|---|---|
| Ṛig-Veda ..... | (1) Śakala. |
| | (2) Báshkala. |
| Yajur-Veda ..... | (1) (*a*) Taittiríya Proper. |
| | (*b*) Maitrayaṇi. |
| | [These are not associated with by their coreligionists.] |
| | (2) Śukla— |
| | (*a*) Kaṇva. |
| | (*b*) Mádhyandin. |
| Sáma ..... | (1) Ráṇáyaní. |
| | (2) Kauthumi. |
| Atharwan ..... | (1) Śaunaka division of the Pippaláda branch. |

[1] See Max Müller's Sanskṛit Lit., pp. 368—377. The lists there given will have to be settled. Thus Áśvaláyana *śakhá* does not now exist. The Sútra of that Rishí is used by the followers of the Śakala śákhá. The Atharva is hardly known. There is only one Bráhmaṇa family in Benares which follows it as a study, and there are a few scattered followers of this Veda in other places.

As regards the Yájusha, the following occurs in another commentary on the Charaṇa-Vyúha recently obtained from Benares:—

यथा च विष्णुपुराणे यजुर्वेदस्य विस्तारमाह । यजुर्वेदतरोः शाखाः सप्तविंशन्महामुने । वैशम्पायननामासौ व्यासशिष्यश्चकार वै । शिष्येभ्यः प्रददौ ताश्च जगृहुस्तेप्यनुक्रमात् ॥ याज्ञवल्क्यस्तु तस्यांभूद्ब्रह्मरातसुतो द्विजः । शिष्यः परमधर्मज्ञो गुरूवृत्तिरतः सदा ॥ ऋषेर्यश्च महामेरोः समाजेष्वागमिष्यति । तस्य वै सप्तरात्रं तत् ब्रह्महत्या भविष्यति ॥ पूर्वमेवं मुनिगणैः समयोयं कृतो द्विज । वैशम्पायन एकस्तु तं व्यतिक्रान्तवांस्तथा ॥ स्वस्रीयं बालकं सोथ पदगृह्यमघातयत् । शिष्यानाह च भोः शिष्या ब्रह्महत्यापरं व्रतम् ॥ चरध्वं मत्कृते सर्वे न विचार्यमिदं तथा । अथाह याज्ञवल्क्यस्तं किमेतैर्बहुभिर्द्विजैः ॥ क्रेशितैरल्पतेजोभिश्चरिष्येहमिदं व्रतम् । ततः क्रुद्धो गुरूः प्राह याज्ञवल्क्यं महामुनिम् ॥ मुच्यतां यत्त्वयाधीतं यतो विप्रावमानकः । निस्तेजसो वदस्येतान् यस्त्वं ब्राह्मणदूषकान् ॥ तेन शिष्येण नाथोस्ति ममाज्ञाभङ्गकारिणा । याज्ञवल्क्यस्ततः प्राह भक्त्यैतत्ते मयोदितम् ॥ ममाप्यलं त्वयाधीतं यन्मया तदिदं द्विज ॥ श्रीपराशर उवाच ॥ इत्युक्त्वा रुधिराक्तानि स्वपाणौ च यजूंष्यथ । छर्दयित्वा ददौ तस्मै ययौ च स्वेच्छया मुनिः ॥ यजूंष्यथ विसृष्टानि याज्ञवल्क्येन वै द्विज । जगृहुस्तित्तिरीभूत्वा तैत्तिरीयास्तु ते ततः ॥ ब्रह्महत्याव्रतं चीर्णं गुरूणा नोदितैस्तु यैः । चरकाध्वर्यवस्ते तु चरणान्मुनिसत्तम ॥ याज्ञवल्क्योपि मैत्रेय प्राणायामपरायणः । तुष्टाव प्रणतः सूर्यं यजूंष्यभिलषंस्ततः ॥ याज्ञवल्क्य उवाच ॥ नमः सवित्रे द्वाराय मुक्तिरमिततेजसे । ऋग्यजुःसामरूपाय त्रयीधामात्मने नमः ॥ इत्येवमादिभिस्तेन स्तूयमानः स वै रविः । वाजिरूपधरः प्राह ब्रियतामभिवाञ्छितम् ॥ याज्ञवल्क्यस्तदा प्राह प्रणिपत्य दिवाकरम् । यजूंषि तानि मे देहि यानि सन्ति न मे गुरौ ॥ पराशर उवाच ॥ एवमुक्तो ददौ तस्मै यजूंषि भगवान् रविः । अयातयामसञ्ज्ञानि यानि वेत्ति न तद्गुरूः ॥ यजूंषि यैरधीतानि तानि विप्रैर्द्विजोत्तम । वाजिनस्ते समाख्याताः सूर्यश्चाश्वोभवद्यतः ॥ शाखाभेदस्तु तेषां वै दशपञ्च च वाजिनाम् । काण्वाद्यास्तु महाभाग याज्ञवल्क्यप्रवर्तिताः ॥

The followers of the several branches are distinguished by the Sútras, which they respectively follow in their ritual. Thus it is laid down[1]:—

बह्वल्पं वा स्वगृह्योक्तं यस्य कर्म प्रकीर्तितम् ।
तस्य तावति शास्त्रार्थे कृते सर्वं कृतं भवेत् ॥

Translation:—Whether the ritual enjoined by the Gṛihya Sútra proper to one's self be great or small (*i.e.* complete or incomplete), when that ritual is observed, the whole is observed.

Other authorities quoted by Hemádri run in the same direction, and practice supports the same conclusion. This speaks of one class of Sútras, namely, the Gṛihya, describing the duties of a Brahmachárí and a Gṛihastha (a householder having a wife). Another class of Sútras are the Śrauta or the Vedic sacrificial Sútras. These are very important in a religious point of view; but in regard to the every-day duties of the Áryas of the present day, they are in a great measure out of date, except to a very small class of the Bráhmaṇa community.[2]

[1] See Hemádri Vratakhaṇḍa, Part I. page 33; Bhaṭṭoji Díkshita, in his comments on the Chaturvinśati Smṛitis, attributes this text to Kátyáyana.

[2] The principal Śrauta Sútras now extant are the following:—

| | *Veda to which it belongs.* | *Remarks.* |
|---|---|---|
| 1. Áśvaláyana ..... | Rich..... | Relates to the duties of a Hotṛi. |
| 2. Ápastamba ..... | Taittiríya or the Black Yajurveda ..... | A small portion of Nos. 2, 3, 4, and 10 relates to the duties of Hotṛi in the Darśapúrṇamása; while the rest is devoted to the work of the Adhvaryu. |
| 3. Baudháyana ..... | | |
| 4. Satyáshádha ..... | | |
| 5. Bharadvája ..... | | |
| 6. Vádhúla..... | | |

These Sútras, both Grihya and Śrauta, which (where they have not been superseded by the Puráṇas and usage) still command the respect of the followers of the respective *śákhás*, and are studied as one of the six *angas*[1] or complements of the Veda. The Śrauta Sútras of the Ṛich, Yájush, and Sáma Vedas are all used to supplement each other in the Śrauta sacrifices.[2]

All the ordinary ceremonies of the Áryas, so far as they are governed by the Sútras, are regulated by the Grihyas Sútras. The Vedic sacrifices alone are regulated by the Śrauta Sútras, and in this respect the Sútras of all the three Vedas (Ṛich, Yajush, and Sáman) are used together for the parts to be taken therein by the different officiators. But of the Taittiríya Sútras, some one only of the following is used by the Adhvaryu:—Ápastamba, Baudháyana, Satyáshádha, or Kátyáyana. Out of these four, Baudháyana is used most; next comes Ápastamba, and after him Kátyáyana. In the Bombay Presidency, the Grihya Sútras most followed are the Áśvaláyana, Satyáshádha, Kátyáyana,

| | *Veda to which it belongs.* | *Remarks.* |
|---|---|---|
| 7. Karmántasútra..... | Taittiríya or the Black Yajurveda ..... | These are supplements to the Sútra of Baudháyana. |
| 8. Aupamanyava ..... | | |
| 9. Śáliki ..... | | |
| 10. Mánava..... | | Belongs to some lost Śákhá, probably subordinate to Maitráyaṇí. |
| 11. Kátyáyana..... | Śukla or the White Yajurveda. | |
| 12. Látyáyana..... | Sáma ..... | Relates to the duties of the Udgátṛí. |
| 13. Kauśika ..... | Atharva. | |

The principal Grihya Sútras are as follow:—

| | *Belongs to the* |
|---|---|
| 1. Áśvaláyana ..... | Ṛig-veda. |
| 2. Śánkháyana ..... | |
| 3. Ápastamba ..... | Taittiríya or the Black Yajurveda. |
| 4. Baudháyana ..... | |
| 5. Satyáshádha..... | |
| 6. Kátyáyana..... | Śukla or the White Yajurveda. |
| 7. Gobhila..... | Sáma Veda. |

[1] शिक्षा कल्पो व्याकरणं छन्दो ज्योतिषं निरुक्तम् | Charaṇa Vyúha under the head of *Kalpa* names three kinds of Sútras, namely, (1) Śraúta, (2) Grihya, and (3) Dharma or Sámayácharika.

[2] The following text from the Ṛich Samhitá explains the position of the three Vedas in these sacrifices:—

ऋचां त्वः पोषमास्ते पुपुष्वान् गायत्रवेवो गायति शकरीषु | ब्रह्मात्वो वदति जातविद्यां यज्ञस्य मात्रां विमिमीत उत्वः || अ० ८, अ० २, व० २४, ऋ० 29, Maṇḍala x, 71, 11.

Translation:—One [of the sacrificial priests called Hotṛi] occupies himself in strengthening (*i.e.* reciting hymns from) the Rich; another [called Udgátṛi] chants the *Śakkvarî richs* from the Sáman; a third called Brahmá gives orders in every matter [connected with the sacrifice]; and a fourth [called Adhvaryu] performs the principal portion of the sacrifice [such as taking the Soma juice and the like, by means of reciting *richs* from the Yajush].

(See Introduction to Ṛig-veda Samhitá vol. I., p. 2.)

and Ápastamba. Except some among the Deśastha Bráhmaṇas along the Godávari, and a small number of Drávidas from Tinnevelly and other parts of Madras settled at and near Satara, there are no Ápastambiyas in the Bombay Presidency.

The following are the commentators on the above Sútras:—

| *Śrauta Sútra.* | *Commentaries.* |
|---|---|
| 1. Áśvaláyana ... | 1. Vṛitti by Gárgya Náráyana. |
| | 2. Bháshya by Devatráta. |
| | 3. Siddhánta Bháshya. |
| 2. Ápastamba ... | 1. Bháshya by Dhúrtasvámin. |
| | 2. Do. by Rámáṇḍára on the comments of Dhúrtásvámin. |
| | 3. Bháshya by Rudradatta. |
| | 4. Aṇḍabilá. |
| | 5. Chauṇḍapa. |
| 3. Baudháyana ... | 1. Bháshya by Keśava Svamin; 2, Śubodhiní; 3, Bháshya by Vidyáraṇya. |
| 4. Satyashádha ... | 1. Mátṛidattíya. |
| | 2. Vaijayantí by Mahádeva Bhaṭṭa, (on chaps. 1—6). |
| | 3. Jyotsná by Gopínátha Díkshita Oka (on chaps. 7 to 11). |
| | 4. Ahobala Kṛita Vyákhyá. |

[Compare M. Müller Sanskrit Lit. list at p 199.]

| | | |
|---|---|---|
| 5. Kátyáyana ... | Eighteen Comments called Bháshyas:— | |
| | 1. Sampradáya. | 9. Jayaráma. |
| | 2. Murári Miśra. | 10. Pitṛibhúti. |
| | 3. Párthasárathi Miśra. | 11. Padmanábha. |
| | | 12. Káśí. |
| | 4. Harihara Miśra. | 13. Aṇantadeva. |
| | 5. Vaidyanátha Miśra. | 14. Haláyudha. |
| | | 15. Karka. |
| | 6. Garga. | 16. Devayájñika. |
| | 7. Riṇadíkshita. | 17. Holira. |
| | 8. Gadádhara. | 18. Chhágábhaṭṭa. |
| | Six Vṛittis:— | |
| | 1. Gangádhara. | 4. Govardhana. |
| | 2. Vásudeva Díkshita. | 5. Viśvanátha-deva. |
| | 3. Devabhadra. | 6. Rámavájapeyin. |
| 6. Látyáyana ... | 1. Dhanvi-Bháshya. | 3. Agnisvámi-Kṛita Vṛitti. |
| | 2. Varada Rajíya. | |

The Srauta ceremonial, though founded on the Śrauta Sútras, is now regulated by other works called *Prayogas* laying down the modes

in which the Śrauta ceremonies are to be actually conducted. Some of these are as follows :—

On the Áśvaláyana Sútra—
Hautrádi-Mañjarí by Jagannatha.
On Baudháyana—
Prayogas by Náráyaṇa Śesha.
„ by Govinda Śesha.
„ by Ananta Deva.
„ by Rudra Deva.
„ by Navahasta.
„ by Vásudeva Díkshita.
Mahágnisarvasva by Vásudeva Díkshita.
Gopálakáriká.
On Ápastamba Sútra—
Prayoga by Anantadeva.
„ by Tryambakabhaṭṭa.
On Satyáshádha—
Prayoga by Gopínátha Díkshita.
„ by Náráyaṇabhaṭṭa Lele.
„ by Bála Śástri Ránaḍe.
Kátyáyana according to Devayájñika.

Of the Gṛihya Sútras the following commentaries are extant :—

| | *Comments by* | |
|---|---|---|
| 1. Ásvaláyana ..... | 1. Gárgyanáráyaṇa. | 3. Gaṇeśa. |
| | 2. Jayanta. | |
| 2. Ápastamba ..... | 1. Sudarśana Bháshya. | |
| 3. Baudháyana..... | 1. Keśavaśvami-Bháshya. | |
| 4. Satyáshádha..... | 1. Mátridattíya. | 2. Ahobalí. |
| 5. Kátyáyana ..... | 1. Haradatta. | |
| 6. Gobhila..... | A modern one by the editor, Chandrakánta Tarkálaṅkára in the Bibliothica Indica. | |

The following are the Prayoga works founded on the Gṛihya Sútras, according to which the *Grihya* ceremonials are conducted :—

On the Áśvalayana Sútra—
By Ananta Deva—*i.e.* Samskára, Áchára, Púrta and other Kaustúbhas.
„ Náráyaṇabhaṭṭa.
„ Anantabhaṭṭa.
On the Sátyáshádha Sútra—
Maheśabhaṭṭí.
Mahádevabhaṭṭí.
Śaṅkarabhaṭṭí.
Gopináthbhaṭṭí.
On the Ápastamba Sútra—
Chandra Chúḍí.
Torokṛita,
Viśvaprakáśiká.
On the Kátyáyana Sútra—
Kuśakaṇḍiká.

I have given only a few to show the class of works now in use. Many other works are also consulted ; and more are being composed from time to time.

The next class of Sútras is that called the *Dharma* or Sámayácháriká. The principal are :—

| | *Comments by* |
|---|---|
| Ápastamba. | Ujjvalá by Haradatta. |
| Satyáshádha. | This is nearly the same as Ápastamba's. |
| Baudháyana. | |

In the Smṛiti Ratnákara, the following eighteen Sútras are given, and are classed as *Púrva* (prior) Sútras, and *Apara* (after) Sútras thus[1] :—

आग्निवेश्यसूत्रे ॥ अथातः सूत्रगणनां व्याख्यास्यामो बौधायनमापस्तम्बं सत्याषाढं द्राह्यायणमागस्त्यं शाकल्यमाश्वलायनं शाङ्खायनीयं कात्यायनमिति नवानि पूर्वसूत्राणि ॥ वैखानसं शौनकीयं भारद्वाजमाग्निवेश्यं जैमिनीयं वाधूलं माध्यन्दिनं कौण्डिन्यं कौषीतकमिति नवान्यपरसूत्राणि ॥

Translation :—'In the Agniveśya Sutrá' I now enumerate the *sútras* : Baudháyana, Ápastamba, Satyáshádha, Dráhyáyaṇa, Agastya, Sákalya, Śvaláyana, Śavaníya, and Kátyáyana—these nine are the *púrva* Sútras. Vaikhanasa Saunakíya, Bháradvája, Agniveśya, Jaiminíya, Vádhula, Mádhyandina, Kaundinya, and Kaushitaká, these are *apara* Sútras.

It will be observed that while this list contains some new Sútras not before mentioned, it omits several well known now in actual use.[2]

Having cursorily given the number of Sútra works and their commentators, I now pass on to the Smṛitis. There are no guides to the Smṛitis like the *Anukramaṇikas* nor *Sarvánukramas* of the Ṛig-Veda. And as far as the commentators go, Mádhava alone appears to furnish a concise resumé of each chapter of one Smṛiti, namely, the Laghu Paráśara Smṛiti. In regard to other works, I have yet found no guides to show their extent or antiquity—either positive or relative.

Some writers would derive their authority from the Śruti or the Vedas now lost.[3] This view is supported by the very term *Smṛiti*—things remembered, which would include tradition. The Taittiríya Áraṇyaka[4] gives four kinds of proofs :—" स्मृतिः प्रत्यक्षमैतिह्यं अनुमानचतुष्टयं ॥"

Translation :—" (1) *Smṛiti*, (2) *Pratyaksha* (what is perceived by the senses), (3) *Aitihya* (received from tradition), and (4) *anumána* (inference) : these four are *pramáṇa* (evidence)." Sáyaṇa in commenting upon this observes : " अनुमेयं श्रुतिमूलं मन्वादिशास्त्रं." Translation :—'Manaváḍi Sástra derives its origin from assumed Śruti.' Sáyaṇa therefore would derive Manu and the rest from the Śruti or the Vedas. Some Smṛitis can thus be traced to the Vedas as now existing; but others have in the words of the Prayoga Párijáta to be traced only to some lost branches of the four Vedas.[5]

The number of Smṛitis is very great. Unfortunately many have been lost. Some exist as fragments; others are only known from quotations in other Smṛitis or digests of more modern writers.

---

[1] Elphinstone College MS., l. 6 p. 1.

[2] Compare the list at page 199 of Prof. M. Müller's History of Ancient Sanskṛita Lit., 2nd Ed.

[3] Prayoga Párijáta Sámskára Káṇḍa उत्सन्नशाखा याः काश्चित् तासां वेदान्तराणि च । अन्तर्धानं गतानीह स्मृत्वा ताः स्मृतयः कृताः ॥

Rámáśramí on Amarakośa (I. vi. 6) ( स्मृतिस्तु धर्मसंहिता) observes l. 45 p. 1 :—" वेदार्थस्मरणपूर्वकत्वात् स्मृतिः । स्मृतिर्धर्मशास्त्रस्मरणयोः स्त्रियां । धर्मबोधार्थं रचिता संहिता " and gives the example of Manu.

[4] See Calcutta Edition p. 9.

[5] Prof. Max Müller's Ancient Sanskṛit Lit. 2nd Ed. page 87.

The compilation of an Index to the Pratikas in Yájñavalkya, and an examination and comparison thereof with the works of the Bhattas, Hemádri, and others, has convinced me that it would be a work of great research to reconstruct Smṛitis from digests. But until such a work is systematically carried out, or more complete MSS. of Smṛitis are discovered, our speculations must at least to a great extent be conjectural. As regards numbers alone, the table at the end shows what materials have been available at different times to some modern investigators. Their number is differently noticed by different ancient writers. Yájñavalkya (I., 4, 5) names the following twenty as the introducers of Dharmaśástra :—

Manu; Atri; Vishṇu; Hárita; Yájñavalkya; Uśanas; Angiras; Yama; Ápastamba; Samvarta; Kátyáyana; Bṛihaspati; Paráśara; Vyása; Śankha; Likhitá; Daksha; Gautama; Śátátapa; Vasishṭa.

The Víramitrodaya in the Achárádhyáya enumerates eighteen Smṛitikárs (or makers of Smṛitis), eighteen Upa-Smṛitikárs (or makers of secondary Smṛitis), and twenty-one other Smṛiti-makers, making altogether fifty-seven, thus—

Eighteen principal Smṛiti-makers:—

Manu; Bṛihaspati; Daksha; Gautama; Yama; Angiras; Yogíśvara; Prachetas; Śátátapa; Paráśara; Samvarta: Uśanas; Śankha; Likhita; Atri; Vishṇu; Ápastamba; Haríta.

Eighteen secondary Smṛiti-makers:—

Jábáli; Náchikéta; Skanda, Laugákshi; Káśyapa; Vyása; Sanatkumára; Sumantu; Pitámaha; Vyághra; Kárshṇájini; Játúkarṇya; Kapiñjala; Baudháyana; Káṇáda; Viśvámitra; Paiṭhínase; Gobhila.

Twenty-one other Smṛiti-makers:—

Vaśishṭa; Nárada; Sumantu; Pitámaha; Vasu; Kṛishṇájini; Śatyavrata; Gárgya; Dévala; Jamadagni; Bharadvája; Pulastya; Kratu; Pulaha; Átréya; Chhágaleya; Maríchi; Vatsa; Páraskara; Ṛishyaśringa; Baijavápa.

For the above Mitra Miśra quotes the authority of Śankha and Likhita, but the verses do not occur in any of the copies of those works noticed in Appendix I.[1] Hemádri[2] notices the same number; but quotes the prose work of Śankha, Likhita and the Smṛiti of Angiras as his authority. The Bhavishya Puráṇa[3] gives thirty-six Smṛitis, and so does the Paiṭhínasí Smṛiti. A digest of the thirty-six is now cited as the Shaṭtrinśanmata (the opinion of thirty-six).

Agnipuráṇa[4] enumerates twenty thus :—

---

[1] My copy of the Achárádhyáya of the Víramitrodaya is complete in MS. and generally quite correct.

[2] Dánakhaṇḍa, Calcutta Edition, 1873, pp. 527—29.

[3] MSS. and see likewise Hemádri. Dánakhaṇḍa, p. 528, (Cal. Ed. 1873). See likewise Vratakhaṇḍa, vol. I., pp. 18, 19.

[4] Vol. II. p. 148, Calcutta Edition, 1876.

(1) Manu, (2) Vishnu, (3) Yájñavalkya, (4) Hárita, (5) Atri, (6) Yama, (7) Angiras, (8) Vasishṭha, (9) Daksha, (10) Samvarta, (11) Śátátapa, (12) Paráśara, (13) Ápastamba, (14) Uśanas, (15) Vyása, (16) Kátyáyana, (17) Vṛihaspati, (18) Gautama, (19) Śankha, and 20 Likhita.

Of these Dr. Rájendrálál Mitra observes:—"It is impossible now to determine whether this list was made to show that these were the only authorities known at the time of the Puráṇa, or that they were the most important or leading lawgivers. In either case their pre-eminence is manifest. This is also evident from the fact of their having been named in Yájñavalkya's code of laws."[1]

Paithínasi enumerates as follows:—

Manu, Angiras, Vyása, Gautama, Likhita, Yama, Vasishṭha, Daksha, Samvarta, Śátátapa, Paráśara, Vishṇu, Ápastamba, Hárita, Sankha, Kátyáyana, Bṛihaspati (under the name of Guru Prachetas), Nárada Yogin, Baudháyana, Pitámaha, Sumantu, Káśyapa, Babhru, Paithinas, Vyághra, Satyavṛata, Bharadvája, Gárgya, Kárshnájini, Jábáli, Jamadagni, Laugákshi. Adding Paithinasi, the number comes up to 36. See Hemádri's Dánakhanḍa, pp. 527, 528.

In the Gáruḍa Mahá Puráṇa[2] the following eighteen are enumerated:

Manu, Vishṇu, Yama, Angiras, Vasishṭha, Daksha, Samvarta, Śátátapa, Paráśara, Ápastamba, Uśanyas, Vyása, Kátyáyana, Bṛihaspati, Gautama, Śankha, Likhita, Hárita, Atri, and myself (Yájñavalkya).

It will be observed that Yájñavalkya's name occurs at the end. He was the speaker, and as will be seen from the manuscript the first and third chapters of the Smṛiti of Yájñavalkya itself are largely quoted from; and this I have made use of elsewhere.[3]

In the Mahábhárata the following law-givers are named[4]:—

The Dharmas laid down by Umámaheśvara, Nandi, Bráhmana, Kumára, Sumantu, Jaimini, Śákala, Pulastya, Pulaha, Pávaka, Agastya, Sudhanya, Sándila, Saulabhanjana, Vála khilyas, Saptarshis (the seven sages), Vyághra, Vyása, Vitaṇḍaka, Vidura, Śriṅga, Angiras, Vaiśampáyana, &c.

---

[1] Preface to Agni-Puráṇa p. xx. Cal. ed., 1878.

[2] Garuḍa Mahá Puráṇa:—

"वक्तारो धर्मशास्त्राणां मनुर्विष्णुर्यमोङ्गिराः। वसिष्ठदक्षसंवर्तशातातपपराशराः॥ आपस्तम्बोशनोव्यासाः कात्यायनबृहस्पती॥ गौतमः शङ्खलिखितौ हारीतोचिरहं तथा॥ एते विष्णुं समाराध्य जाता धर्म्मोपदेशकाः॥"

[3] To make the point quite clear I obtained another old MS. of the Garuḍa Mahá Puráṇa, and had it closely compared with my own—also a very old one—MS.

[4] Mahábhárata, Áśvamedhika Parva:—

उमामहेश्वराश्चैव नन्दिधर्माश्च पावनाः। ब्रह्मणा कथिताश्चैव कौमाराश्च श्रुता मया॥ सुमन्तुजैमिनिकृताः शाकलीयास्तथैव च। पुलस्त्यपुलहोद्गीताः पावकीयास्तथैव च॥ अगस्त्यगीताः सौधन्याः शाण्डिल्याः शैलभञ्जनाः। वालखिल्यकृता ये च ये च सप्तर्षिभिः कृताः॥ वैयाघ्रा व्यासगीताश्च वितण्डककृताश्च ये। तथा विष्णोश्च वाक्यानि भृगोरङ्गिरसस्तथा॥ वैशम्पायनगीताश्च ये चान्ये एवमादय इति

If we come to modern writers, the texts of the following Rishis are quoted by Hemádri in two of his works :—

| Names. | Dána Khanda. | Vrata Khanda. | Names. | Dána Khanda. | Vrata Khanda. |
|---|---|---|---|---|---|
| Agastya | 1 | ... | Mándavya | 1 | ... |
| Agasti | 1 | 1 | Yama | 1 | 1 |
| Angiras | 1 | ... | Yamaśátátapau | 1 | ... |
| Atri | 1 | ... | Yájñavalkya | 1 | ... |
| Ápastamba | 1 | 1 | Yogi-Yájñavalkya | 1 | ... |
| Átreya | 1 | ... | Lanna | ... | 1 |
| Uśanas | 1 | ... | Laghu Hárita | 1 | 1 |
| Rishyaśringa | 1 | 1 | Vasishtha | 1 | 1 |
| Aupakáyana | 1 | ... | Viśvámitra | 1 | 1 |
| Kaśyapa | 1 | ... | Vishnu | 1 | 1 |
| Káśyapa | 1 | ... | Vriddha-Gautama | 1 | ... |
| Kátyáyana | 1 | 1 | Vriddha-Garga | ... | 1 |
| Gálava | 1 | ... | Vriddha-Bodháyana | 1 | ... |
| Gobhila | 1 | ... | Vriddha-Vasishtha | 1 | 1 |
| Gautama | 1 | 1 | Vriddha Śátátapa | 1 | ... |
| Chyavana | 1 | ... | Brihaspati | 1 | 1 |
| Chhágaleya | 1 | 1 | Veda-Vyása | 1 | 1 |
| Játúkarnya | 1 | ... | Vyása | 1 | 1 |
| Jábáli | 1 | 1 | Śankha | 1 | ... |
| Daksha | 1 | ... | Śankhalikhitau | 1 | 1 |
| Devala | 1 | 1 | Śátátapa | 1 | 1 |
| Dhaumya | 1 | ... | Śátyáyana | 1 | ... |
| Nárada | 1 | ... | Śaunaka | ... | 1 |
| Paráśara | 1 | ... | Śloka-Gautama | 1 | ... |
| Pulastya | ... | 1 | Shattrinśanmatam | 1 | 1 |
| Paithinasi | 1 | 1 | Samvarta | 1 | ... |
| Prachetas | 1 | ... | Sumantu | 1 | ... |
| Baudháyana | 1 | ... | Satyavrata | ... | 1 |
| Maríchi | 1 | 1 | Háríta | 1 | ... |
| Manu | ... | 1 | | | |
| | | | | 55 | 28 |

Thus while 55 Rishis are cited in the Dána Khanda, 28 are cited in the Vrata Khanda ; but of these, the works of a large number are not yet available in a separate form.

Mádhava[1] in his commentary on Paráśara, after alluding to Manu,

[1] The passage runs thus —

तत्र पैठीनसिः ॥ तेषां मन्वङ्गिरोव्यासगौतमाव्युशनोयमाः । वसिष्ठदक्षसंवर्तशातातपपराशराः । विष्णापस्तम्बहारीताः शङ्खः कात्यायनो भृगुः । प्रचेता नारदो योगी बौधायनपितामहौ ॥ सुमन्तुः कश्यपो बभ्रुः पैठीनो व्यास एव च । सत्यव्रतो भरद्वाजो गार्ग्यः कार्ष्णाजिनिस्तथा ॥ जाबालिर्जमदग्निश्च लौगाक्षिर्ब्रह्मसम्भवः । इति धर्मप्रणेतारः षट्त्रिंशदृषयस्तथा ॥ ननु किमियं परिसङ्ख्या मैवं तथा सति वत्समरीचिदेवलपारास्करपुलस्त्यपुलहकतुऋष्यशृङ्गलिखितछागलेयात्रेयादीनां धर्मशास्त्रप्रणेतृत्वं न स्यात् ॥ आश्वमेधिके पर्वण्यपि तत्तन्मुनिप्रोक्तधर्मानुक्रमणाद्धर्मशास्त्रकर्तारोवगम्यन्ते ॥ श्रुता मे मानवा धर्मा इत्युपक्रम्यैवं पठ्यते ॥ भूम्नायवकृता धर्माः कार्यविज्ञानरा अपि । भार्गवा याज्ञवल्क्याश्च मार्कण्डेयाश्च कौशिकाः ॥ भरद्वाजकृता ये च बृहस्पतिकृताश्च ये । कणेश्च कणिनाहेश्च विश्वामित्रकृताश्च ये ।

cites the passage from Paithínasi quoted above, giving names of 36 Smṛitis. He then asks—'Is this an exhaustive enumeration? No, [says he], for [if it were], the authority of Vatsa, Maríchi, Devala, Páraskara, Pulastya, Pulaha, Kratu, Ṛishya Śringa, Likhita, Chhágaleya, Átreya, &c., as expounders of the Dharmaśástra would not be [acknowledged].' He then gives from the Mahábhárata a list of lawgivers which I have given at page xv.

The 12 Mayúkhas which have been carefully examined contain extracts from 97 different Smṛitis, which I have thrown into the form of a table.

| | Smṛitis quoted by Nílakaṇṭha. | Samskára. | Áchára. | Samaya. | Śráddha. | Níti. | Vyavahára. | Dána. | Utsarga. | Pratishṭhá. | Práyáschitta. | Śuddhi. | Śánti. |
|---|---|---|---|---|---|---|---|---|---|---|---|---|---|
| | | 1 | 2 | 3 | 4 | 5 | 6 | 7 | 8 | 9 | 10 | 11 | 12 |
| 1 | Angiras ... ... | 1 | 1 | ... | 1 | ... | ... | 1 | ... | ... | 1 | 1 | ... |
| 2 | Atri ... ... ... | 1 | 1 | ... | 1 | ... | ... | ... | ... | ... | 1 | 1 | ... |
| 3 | Áchárya ... ... | ... | 1 | ... | ... | ... | ... | ... | ... | ... | ... | ... | ... |
| 4 | Átreya ... ... | ... | ... | ... | ... | ... | ... | 1 | ... | ... | ... | ... | ... |
| 5 | Apastamba ... ... | 1 | 1 | 1 | 1 | ... | 1 | ... | ... | ... | 1 | 1 | ... |
| 6 | Áśvaláyana ... ... | 1 | 1 | ... | 1 | ... | 1 | 1 | ... | ... | 1 | 1 | 1 |
| 7 | Uśanas ... ... | ... | 1 | ... | 1 | ... | 1 | ... | ... | ... | 1 | ... | ... |
| 8 | Ṛishyaśṛinga ... | ... | 1 | 1 | ... | ... | ... | ... | ... | ... | 1 | ... | ... |
| 9 | Kaṇva ... ... | ... | 1 | ... | 1 | ... | ... | ... | ... | ... | ... | ... | ... |
| 10 | Kaśyapa ... ... | 1 | ... | ... | ... | ... | ... | ... | ... | ... | 1 | 1 | ... |
| 11 | Kátyáyana ... ... | 1 | 1 | 1 | 1 | ... | 1 | 1 | ... | ... | 1 | ... | ... |
| 12 | Káśyapa ... ... | ... | ... | ... | 1 | ... | ... | ... | ... | ... | ... | ... | ... |
| 13 | Kárshṇájini... ... | ... | 1 | 1 | 1 | ... | ... | ... | ... | ... | 1 | ... | ... |
| 14 | Krishṇájina,... ... | ... | ... | ... | ... | ... | 1 | ... | ... | ... | ... | ... | ... |
| 15 | Kauṇḍinya ... ... | ... | ... | ... | 1 | ... | ... | ... | ... | ... | ... | ... | ... |
| 16 | Garga ... ... | 1 | 1 | ... | 1 | ... | ... | ... | ... | ... | ... | ... | 1 |
| 17 | Gárgya ... ... | ... | 1 | 1 | 1 | ... | ... | ... | ... | ... | 1 | ... | 1 |
| 18 | Gálava ... ... | ... | ... | ... | 1 | ... | ... | ... | ... | ... | 1 | ... | ... |
| 19 | Gobhila ... ... | 1 | 1 | 1 | 1 | ... | ... | ... | ... | ... | ... | ... | 1 |
| 20 | Gautama ... ... | 1 | 1 | 1 | 1 | ... | 1 | 1 | ... | ... | 1 | 1 | ... |
| 21 | Chyavana ... ... | ... | ... | ... | ... | ... | ... | 1 | ... | ... | 1 | ... | ... |
| 22 | Chhágaleya... ... | ... | ... | 1 | ... | ... | ... | ... | ... | ... | 1 | ... | ... |
| 23 | Jamadagni ... ... | 1 | ... | ... | 1 | ... | ... | ... | ... | ... | 1 | ... | ... |
| 24 | Játúkarṇya ... ... | 1 | 1 | ... | 1 | ... | ... | 1 | ... | ... | 1 | 1 | ... |
| 25 | Jábála ... ... | ... | ... | ... | ... | ... | ... | ... | ... | ... | 1 | ... | ... |
| 26 | Jábáli ... ... | 1 | ... | 1 | ... | ... | ... | ... | ... | ... | ... | ... | ... |
| 27 | Jyotishparáśara ... | ... | ... | ... | 1 | ... | ... | ... | ... | ... | ... | ... | ... |
| 28 | Daksha ... ... | 1 | 1 | ... | ... | ... | ... | 1 | ... | ... | 1 | 1 | ... |
| 29 | Devala ... ... | 1 | 1 | 1 | 1 | ... | 1 | 1 | ... | ... | 1 | 1 | 1 |
| 30 | Nárada ... ... | 1 | 1 | 1 | 1 | 1 | 1 | ... | ... | ... | 1 | ... | 1 |
| 31 | Paráśara ... ... | 1 | 1 | ... | ... | 1 | ... | ... | ... | ... | 1 | 1 | 1 |
| 32 | Páraskara ... ... | ... | ... | ... | 1 | ... | ... | ... | ... | ... | 1 | ... | ... |

| | Smritis quoted by Nílakaṇṭha. | Samskára. | Áchára. | Samaya. | Śrádddha. | Níti. | Vyavahára. | Dána. | Utsarga. | Pratishṭhá. | Práyáschitta. | Śuddhi. | Śánti. |
|---|---|---|---|---|---|---|---|---|---|---|---|---|---|
| | | 1 | 2 | 3 | 4 | 5 | 6 | 7 | 8 | 9 | 10 | 11 | 12 |
| 33 | Pitámaha ... ... | ... | 1 | 1 | ... | ... | 1 | ... | ... | ... | ... | ... | ... |
| 34 | Pulastya ... ... | ... | 1 | ... | ... | ... | ... | ... | ... | ... | 1 | ... | ... |
| 35 | Paiṭhínasi ... ... | 1 | 1 | 1 | 1 | ... | ... | ... | ... | ... | 1 | 1 | ... |
| 36 | Prachetas ... ... | ... | 1 | ... | 1 | 1 | ... | ... | ... | ... | ... | ... | ... |
| 37 | Prajápati ... ... | 1 | 1 | 1 | ... | ... | 1 | ... | ... | ... | 1 | ... | ... |
| 38 | Budha ... ... | ... | 1 | ... | ... | ... | ... | ... | ... | ... | ... | ... | ... |
| 39 | Bṛihaspati ... ... | 1 | 1 | 1 | 1 | ... | 1 | 1 | ... | ... | 1 | 1 | ... |
| 40 | Bṛihan-Manu ... ... | ... | ... | ... | 1 | ... | ... | ... | ... | ... | 1 | ... | 1 |
| 41 | Bṛihad-Yama ... ... | ... | ... | 1 | ... | ... | ... | ... | ... | ... | 1 | ... | ... |
| 42 | Baijavápa ... ... | ... | ... | ... | 1 | ... | ... | ... | ... | ... | ... | ... | ... |
| 43 | Baudháyana ... | 1 | 1 | 1 | 1 | ... | 1 | 1 | ... | ... | 1 | 1 | 1 |
| 44 | Brahmagarbha ... | ... | ... | ... | ... | ... | ... | ... | ... | ... | 1 | ... | ... |
| 45 | Brahman ... ... | ... | 1 | ... | ... | ... | ... | ... | ... | ... | ... | ... | ... |
| 46 | Bhagawat ... ... | ... | 1 | ... | ... | ... | ... | ... | ... | ... | ... | ... | ... |
| 47 | Bharadvája ... ... | 1 | 1 | ... | 1 | ... | ... | ... | ... | ... | ... | ... | ... |
| 48 | Bhárgava ... ... | ... | ... | ... | 1 | ... | ... | ... | ... | ... | ... | ... | ... |
| 49 | Bhṛigu ... ... | ... | 1 | 1 | 1 | ... | ... | ... | ... | ... | ... | 1 | 1 |
| 50 | Matsya ... ... | ... | ... | 1 | ... | ... | ... | ... | ... | ... | ... | ... | ... |
| 51 | Manu ... ... | 1 | 1 | 1 | 1 | 1 | 1 | 1 | ... | ... | 1 | 1 | ... |
| 52 | Madhyamáṅgiras ... | ... | ... | ... | ... | ... | ... | ... | ... | ... | 1 | ... | ... |
| 53 | Maríchi ... ... | ... | 1 | ... | 1 | ... | 1 | 1 | ... | ... | ... | 1 | ... |
| 54 | Máthula ... ... | ... | 1 | ... | ... | ... | ... | ... | ... | ... | ... | ... | ... |
| 55 | Márkaṇḍeya ... | ... | 1 | 1 | 1 | ... | ... | ... | ... | ... | 1 | ... | 1 |
| 56 | Medhátithi ... ... | 1 | 1 | ... | ... | ... | ... | ... | ... | ... | 1 | ... | 1 |
| 57 | Yama ... ... | ... | 1 | 1 | 1 | ... | 1 | 1 | 1 | ... | 1 | ... | ... |
| 58 | Yájñavalkya ... | 1 | 1 | 1 | 1 | 1 | 1 | 1 | ... | ... | 1 | 1 | 1 |
| 59 | Yogiyájñavalkya ... | ... | 1 | ... | 1 | ... | ... | ... | ... | ... | 1 | ... | ... |
| 60 | Yogin ... ... | ... | 1 | ... | ... | ... | ... | ... | ... | ... | 1 | ... | ... |
| 61 | Yogíśvara ... ... | ... | ... | ... | ... | ... | ... | ... | ... | ... | 1 | ... | ... |
| 62 | Laghu-Háríta ... | ... | ... | ... | 1 | ... | ... | ... | ... | ... | ... | ... | ... |
| 63 | Laugáksha ... ... | ... | ... | ... | ... | ... | ... | ... | ... | ... | ... | ... | ... |
| 64 | Laugákshi ... ... | 1 | ... | 1 | 1 | ... | 1 | ... | ... | ... | 1 | ... | ... |
| 65 | Vasishṭha ... ... | 1 | 1 | 1 | 1 | ... | 1 | 1 | ... | ... | ... | ... | ... |
| 66 | Vámana ... ... | ... | ... | ... | ... | ... | ... | ... | ... | ... | 1 | ... | 1 |
| 67 | Vivasvat ... ... | ... | 1 | ... | ... | ... | ... | ... | ... | ... | ... | ... | 1 |
| 68 | Viśvámitra ... ... | ... | 1 | ... | ... | ... | ... | ... | ... | ... | ... | ... | ... |
| 69 | Vishṇu ... ... | 1 | 1 | 1 | 1 | ... | 1 | 1 | 1 | ... | 1 | ... | ... |
| 70 | Vṛiddha-Gárgya ... | ... | ... | 1 | ... | ... | ... | ... | ... | ... | ... | 1 | ... |
| 71 | Vṛiddha-Gautama ... | ... | ... | 1 | ... | ... | 1 | ... | ... | ... | ... | ... | 1 |
| 72 | Vṛiddha-Garga ... | ... | ... | ... | 1 | ... | ... | ... | ... | ... | ... | ... | ... |
| 73 | Vṛiddha-Bṛihaspati.. | ... | ... | ... | 1 | ... | ... | ... | ... | ... | ... | ... | ... |
| 74 | Vṛiddha-Parásara ... | ... | 1 | ... | ... | ... | ... | 1 | ... | ... | ... | ... | ... |
| 75 | Vṛiddha-Manu ... | ... | 1 | 1 | ... | ... | 1 | ... | ... | ... | 1 | ... | ... |
| 76 | Vṛiddha-Vasishṭha... | ... | ... | 1 | 1 | ... | ... | ... | ... | ... | ... | ... | ... |
| | | | | | | | | | | | .. | 1 | 1 |

| | Smritis quoted by Nílakaṇṭha. | Saṃskára. | Áchára. | Samaya. | Śráddha. | Níti. | Vyavahára. | Dána. | Útsarga. | Pratishṭhá. | Práyáschitta. | Śuddhi. | Śánti. |
|---|---|---|---|---|---|---|---|---|---|---|---|---|---|
| | | 1 | 2 | 3 | 4 | 5 | 6 | 7 | 8 | 9 | 10 | 11 | 12 |
| 77 | Vriddha-Vishṇu ... | ... | ... | ... | ... | ... | ... | ... | ... | ... | 1 | ... | ... |
| 78 | Vriddha-Śátátapa ... | ... | ... | ... | 1 | 1 | ... | ... | ... | ... | 1 | ... | ... |
| 79 | Vyághra ... ... | ... | ... | ... | ... | 1 | ... | ... | ... | ... | 1 | ... | ... |
| 80 | Vyághrapáda ... | ... | ... | ... | 1 | ... | ... | ... | ... | ... | ... | 1 | ... |
| 81 | Vyásapáda ... ... | 1 | 1 | 1 | 1 | ... | 1 | 1 | ... | ... | 1 | 1 | 1 |
| 82 | Śaṅkha ... ... | 1 | 1 | ... | 1 | ... | ... | ... | ... | ... | 1 | 1 | ... |
| 83 | Śankhalikhitau ... | 1 | ... | ... | 1 | ... | 1 | ... | ... | ... | 1 | ... | ... |
| 84 | Śambhu ... ... | ... | ... | ... | 1 | ... | ... | ... | ... | ... | ... | ... | ... |
| 85 | Śákala ... ... | ... | ... | ... | ... | ... | 1 | ... | ... | ... | ... | ... | ... |
| 86 | Śáṭhyáyani ... ... | ... | 1 | ... | 1 | ... | ... | ... | ... | ... | ... | ... | ... |
| 87 | Śátátapa ... ... | ... | 1 | 1 | 1 | ... | ... | ... | ... | ... | 1 | ... | ... |
| 88 | Śálaṅkáyana ... | ... | ... | ... | 1 | ... | ... | ... | ... | ... | ... | ... | ... |
| 89 | Śaunaka ... ... | ... | 1 | ... | 1 | ... | 1 | ... | ... | ... | ... | ... | 1 |
| 90 | Śloka-Gautama ... | ... | ... | 1 | 1 | ... | ... | ... | ... | ... | ... | ... | ... |
| 91 | Śloka-Ápastamba ... | ... | 1 | ... | ... | ... | ... | ... | ... | ... | ... | ... | ... |
| 92 | Satyavrata ... ... | ... | ... | 1 | ... | ... | ... | ... | ... | ... | ... | ... | ... |
| 93 | Sanatkumára ... | ... | ... | 1 | ... | ... | ... | ... | ... | ... | ... | ... | ... |
| 94 | Samvarta ... ... | 1 | 1 | ... | ... | ... | ... | 1 | ... | ... | 1 | 1 | ... |
| 95 | Sáṅkhyáyana ... | ... | 1 | ... | ... | ... | ... | ... | ... | ... | ... | ... | ... |
| 96 | Sumantu ... ... | ... | 1 | ... | 1 | ... | ... | 1 | ... | ... | 1 | ... | ... |
| 97 | Háríta ... ... | 1 | 1 | ... | 1 | ... | 1 | 1 | ... | ... | 1 | 1 | ... |
| | Total ... | 32 | 56 | 37 | 56 | 5 | 26 | 23 | 2 | ... | 54 | 24 | 19 |

In the Nirṇayasindhu alone, Kamalákara refers to 131 Smṛitis, and Anantadeva in the Sanskárakaustubha quotes 104. Besides these, other Smṛiti passages are given, but their authors are not named.

A comparison of the table referred to at page xiv, with the lists given above from various sources, and an examination of the passages quoted, will confirm what has become abundantly manifest in the course of this enquiry, that many Smṛitis have not yet been found, and that those that have been found and some that have been published are in an imperfect state. It is thus almost impossible to do much at present to settle their chronological order either absolutely or relatively. A large number have, however, been studied with the view of finding out their sequence by internal evidence. From an examination of several Smṛitis,

the annexed comparative statement has been drawn, showing which Smṛitis quote which other Smṛitis.

Table showing the names of certain Smṛitis referred to in other Smṛitis.[1]

| The Name of the Smṛiti. | Laghu Atri. | Vṛiddha Atri. | Vṛiddha Hárita. | Uśanas. | Vṛiddha Gautama. | Kátyáyana. | Laghu Vyása. | Saṅkha. | Bṛihat Paráśara. | Vasishṭha. | Paráśara. | Bṛihaspati. | Apastamba. | Aṅgiras. | Yama. |
|---|---|---|---|---|---|---|---|---|---|---|---|---|---|---|---|
| No. | 1 | 2 | 3 | 4 | 5 | 6 | 7 | 8 | 9 | 10 | 11 | 12 | 13 | 14 | 15 |
| Manu | 1 | 1 | 1 | ... | 1 | ... | 1 | ... | ... | 1 | 1 | ... | ... | ... | ... |
| Bṛihaspati | 1 | ... | ... | ... | ... | ... | ... | ... | ... | ... | ... | ... | ... | ... | 1 |
| Śaṅkha | ... | 1 | ... | ... | 1 | ... | ... | ... | ... | ... | 1 | ... | ... | ... | ... |
| Kátyáyana | ... | ... | 1 | ... | ... | ... | ... | ... | ... | ... | 1 | ... | ... | ... | ... |
| Yájñavalkya | ... | ... | 1 | ... | 1 | ... | ... | ... | ... | ... | 1 | ... | ... | ... | ... |
| Nárada | ... | ... | 1 | ... | 1 | 1 | ... | ... | ... | ... | ... | ... | ... | ... | ... |
| Bhṛigu | ... | ... | 1 | 1 | 1 | ... | ... | ... | ... | ... | ... | ... | ... | ... | ... |
| Vasishṭha | ... | ... | 1 | 1 | 1 | 1 | ... | ... | 1 | ... | 1 | ... | ... | ... | ... |
| Maríchi | ... | ... | 1 | ... | ... | ... | ... | ... | ... | ... | ... | ... | ... | ... | ... |
| Daksha | ... | ... | 1 | ... | ... | ... | ... | ... | ... | ... | 1 | ... | ... | ... | ... |
| Aṅgiras | ... | ... | 1 | ... | 1 | ... | ... | ... | ... | ... | 1 | ... | 1 | ... | ... |
| Pulaha | ... | ... | 1 | ... | 1 | ... | ... | ... | ... | ... | ... | ... | ... | ... | ... |
| Pulastya | ... | ... | 1 | ... | 1 | ... | ... | ... | ... | ... | ... | ... | ... | ... | ... |
| Atri | ... | ... | 1 | ... | 1 | ... | ... | ... | ... | ... | 1 | ... | ... | ... | ... |
| Śátátapa | ... | ... | 1 | ... | ... | ... | ... | ... | ... | ... | 1 | ... | ... | ... | ... |
| Vaikhánasa | ... | ... | ... | 1 | ... | ... | ... | ... | ... | ... | ... | ... | ... | ... | ... |
| Śaunaka | ... | ... | ... | 1 | ... | ... | ... | ... | ... | ... | .. | ... | ... | ... | ... |
| Kaśyapa | ... | ... | ... | ... | 1 | ... | ... | ... | ... | ... | 1 | ... | ... | .. | ... |
| Gárgya | ... | ... | ... | ... | 1 | ... | ... | ... | ... | ... | ... | ... | ... | ... | ... |
| Gautama | ... | ... | ... | ... | 1 | 1 | ... | ... | ... | 1 | 1 | ... | ... | ... | ... |
| Gopálita | ... | ... | ... | ... | 1 | ... | ... | ... | ... | ... | ... | ... | ... | ... | ... |
| Paráśara | ... | ... | ... | ... | 1 | ... | ... | ... | ... | ... | ... | ... | ... | ... | ... |
| Sumantu | ... | ... | ... | ... | 1 | ... | ... | ... | ... | ... | ... | ... | ... | ... | ... |
| Viśvámitra | ... | ... | ... | ... | 1 | ... | ... | ... | ... | ... | ... | ... | ... | ... | ... |
| Jaimini | ... | ... | ... | ... | 1 | ... | ... | ... | ... | ... | ... | ... | ... | ... | ... |
| Agastya | ... | ... | ... | ... | 1 | ... | ... | ... | ... | ... | ... | ... | ... | ... | ... |
| Mudgala | ... | ... | ... | ... | 1 | ... | ... | ... | ... | ... | ... | ... | ... | ... | ... |
| Sándilya | ... | ... | ... | ... | 1 | ... | ... | ... | ... | ... | ... | ... | ... | ... | ... |
| Válakhilya | ... | ... | ... | ... | 1 | ... | ... | ... | ... | ... | ... | ... | ... | ... | ... |
| Apastamba | ... | ... | ... | ... | 1 | ... | ... | ... | ... | ... | 1 | ... | ... | 1 | ... |
| Likhita | ... | ... | ... | ... | 1 | ... | ... | ... | ... | ... | 1 | ... | ... | ... | ... |
| Prajápati | ... | ... | ... | ... | 1 | ... | 1 | ... | ... | 1 | 1 | ... | ... | ... | ... |
| Yama | ... | ... | ... | ... | 1 | ... | ... | 1 | ... | ... | ... | ... | ... | ... | ... |
| Vibhándaka | ... | ... | ... | ... | 1 | ... | ... | ... | ... | ... | ... | ... | ... | ... | ... |
| Uddálaka | ... | ... | ... | ... | 1 | ... | ... | ... | ... | ... | ... | ... | ... | ... | ... |
| Uśanas | ... | ... | ... | ... | 1 | ... | ... | ... | ... | ... | 1 | ... | 1 | ... | ... |
| Gobhila | ... | ... | ... | ... | ... | 1 | ... | ... | ... | ... | ... | ... | ... | ... | ... |
| Śakti | ... | ... | ... | ... | ... | ... | ... | ... | 1 | ... | ... | ... | ... | ... | ... |
| Garga | ... | ... | ... | ... | ... | ... | ... | ... | ... | ... | 1 | ... | ... | ... | ... |
| Vishnu | ... | ... | ... | ... | ... | ... | ... | ... | ... | ... | 1 | ... | ... | ... | ... |
| Samvarta | ... | ... | ... | ... | ... | ... | ... | ... | ... | ... | 1 | ... | ... | ... | ... |
| Hárita | ... | ... | ... | ... | ... | ... | ... | ... | ... | 1 | 1 | ... | ... | ... | ... |
| Prachetas | ... | ... | ... | ... | ... | ... | ... | ... | ... | ... | 1 | ... | ... | ... | ... |
| Vyása | ... | ... | ... | ... | ... | ... | ... | ... | ... | ... | ... | 1 | ... | ... | ... |
| Kapila | ... | ... | ... | ... | ... | ... | 1 | ... | ... | ... | ... | ... | ... | ... | ... |

The names of the authors that are referred to therein.

[1] The following are some of the extracts from the different Smṛitis contained in the

Based upon the above comparative statement, I subjoin a statement which will show which Smriti-writers preceded which :—

Manu precedes Laghu Atri, Vriddha Atri, Vriddha Hárita, Vriddha Gautama, Laghu Vyása, Vasishtha, Laghu Paráśara.

---

Calcutta compilation of Mr. Jibánand Vidyáságara upon which the above statement is based :—

LAGHU ATRI.

मृतसूतकपुष्टाङ्गो द्विजः शूद्रान्नभोजनः । अहमेव न जानामि कां कां योनिं गमिष्यति ॥
श्वानस्तु सप्त जन्मानि नव जन्मानि शूकरः । गृध्रो द्वादश जन्मानि इत्येवं मनुरब्रवीत् ॥ (p. 8)
एवं पृष्टः स इन्द्रेण देवदेवपुरोहितः । वाचस्पतिर्महातेजा बृहस्पतिरुवाचह ॥ (p. 12)

VRIDDHA ATRI.

श्वानस्तु सप्त जन्मानि नव जन्मानि शूकरः । गृध्रोऽष्टादशजन्मानि इत्येवं मनुरब्रवीत् ॥ (p 54)

VRIDDHA HÁRÍTA.

यदुक्तं मनुना धर्मं व्यवहारपदं प्रति । विलोक्य तंच विद्वद्भिर्वीतरागैर्विमत्सरैः ॥ विमृश्य धर्मविद्भिश्च विमलैः पापभीरुभिः । धर्मेणैव सदा राजा शासयेत्पृथिवीं स्वकाम् ॥ विपरीतां दण्डयेद्वै यावद्दोषनाशनम् । अस्यामपि च दण्ड्या वै शास्त्रमार्गविरोधिनः ॥ राजधर्मोऽयमित्येवं प्रसङ्गात् कथितो मया । कात्यायनेन मुनिना याज्ञवल्क्येन धीमता ॥ नारदेन च सम्प्रोक्तं विस्तरादिदमेव हि ॥ (p. 265)

सर्गादौ लोककर्तासौ भगवान् पद्मसम्भवः । मन्वादिप्रमुखान् विप्रान् ससृजे धर्मगुप्तये ॥ मनुर्भृगुर्वसिष्ठश्च मरीचिर्दक्ष एवच । अङ्गिराः पुलहश्चैव पुलस्त्यो ऽत्रिर्महातपाः ॥ (p. 266)

सनन्दनश्च सनकः सनत्कुमारः सनातनः । औडुश्च सोमकपिलः पञ्चमो नारदस्तथा ॥ भृगुर्विधनसोऽत्रिश्च मरीचिः काश्यपोऽङ्गिराः । पुलहः स्वायम्भुवो दाल्भ्यो वसिष्ठाद्यास्ततः क्रमात् ॥ वसिष्ठो वामदेवश्च हारीतश्च पराशरः । व्यासः शुकश्च प्रह्लादः शौनको जनकस्तथा ॥ मार्कण्डेयो ध्रुवश्चैव पुण्डरीकश्च मारुतः । रुक्माङ्गदः शिवो ब्रह्मा पूजनीया यथाक्रमम् ॥ तथा लोकेश्वराः पूज्याः शङ्खचक्रादिहेतयः । वेदाश्च साङ्गाः स्मृतयः पुराणं धर्मसंहिताः ॥ (p. 358)

विष्वक्सेनाय धात्रे च सम्प्रोक्तं परमात्मना । विष्वक्सेनेन सम्प्रोक्तमेतद्विधनसे पुरा ॥ (p. 408)

UŚANAS.

वसिष्ठशापात्त्रेतायां केचित्पारशवास्तथा । वैखानसेन केचित्तु केचिद्भागवतेन च ॥ (p. 500)
शौनकाद्याश्च मुनय औशनं भार्गवं मुनिम् । नत्वा पप्रच्छुरखिलं धर्मशास्त्रविनिर्णयम् ॥ (p. 501)
ये नरा भर्तृपिण्डार्थं स्वान् प्राणान् संत्यजन्ति हि । तेषामेव परान् लोकानुवाच भगवान् भृगुः ॥ (p. 504)

ÁPASTAMBA

गोमूत्रेण तु संमिश्रं यावकं भक्षयेत् द्विजः । एतन्मिश्रितं चैवमुक्तं चौशनसा स्वयम् ॥ (p. 569)

KÁTYÁYANA.

अथातो गोभिलोक्तानामन्येषां चैव कर्मणाम् । अस्पष्टानां विधिं सम्यक् दर्शयिष्ये प्रदीपवत् ॥ (p. 603)
तत्रापि मातरः पूर्वं पूजनीयाः प्रयत्नतः । वसिष्ठोक्तो विधिः कृत्स्नो द्रष्टव्योत्र निरामिषः ॥ (p. 605)
नारदाद्युक्तवार्क्षं यदष्टाङ्गुलमपाटितम् । सत्वचं दन्तकाष्ठं स्यात्तदग्रेण प्रधावयेत् (p. 615)
इदं शास्त्रं च गुह्यं च परिसंख्यानमेव च । वसिष्ठोक्तंच यो वेद स श्राद्धं वेद नेतरः ॥ (p. 618)
स्वधाकारेण निनयेत्पित्र्यं बलिमतः सदा । तदध्येके नमस्कारं कुर्वते नेति गौतमः ॥ (p. 619)
आन्वष्टक्यं मध्यमायामिति गोभिलगौतमौ । (p. 626)

PARÁŚARA.

धर्मं कथय मे तात अनुग्राह्यो ह्यहं तव । श्रुता मे मानवा धर्माः वासिष्ठाः काश्यपास्तथा ॥ १२
गार्गीया गौतमीयाश्च तथा चौशनसाः स्मृताः । अत्रेर्विष्णोश्च संवर्तादक्षादङ्गिरसस्तथा ॥ १३ ॥ शाता-

Atri precedes Vṛiddha Háríta, Laghu Paráśara.
Gautama do. Vṛiddha Gautama, Kátyáyana, Vasishṭha, Laghu-Paráśara
Vyása do. Bṛihaspati.

---

तपाच्च हारीताद्याज्ञवल्क्यात्तथैव च ॥ आपस्तम्बकृता धर्माः शङ्खस्य लिखितस्य च ॥ १४ ॥ कात्यायनकृताश्चैव तथा प्राचेतसान्मुनेः ॥ श्रुता ह्येते भवत्प्रोक्ताः श्रौतार्था मे न विस्मृताः ॥ १५ ॥
(p. 2 part II.)

BṚIHAT PARAŚARA.

वसिष्ठः प्रोक्तवान् सम्यक् दशरथस्य पृच्छतः । तस्माद्यः श्रुतवान् शक्तिसूनवेऽतः पराशरः ॥
(p. 265 part II.)

LAGHU VYASA.

उपवासेन तत्तुल्यं मनुराह प्रजापतिः (p. 318 part II.)

ŚANKHA.

कालशाकं महाशल्कं मांसं वा शकुनस्य च । खड्गमांसं तथानन्त्यः यमः प्रोवाच धर्मवित् ॥
(p. 362 part II.)

समानं खल्वशौचं तु प्रथमे तु समापयेत् । असमानं द्वितीयेन धर्मराजवचो यथा ॥
(p. 364 part II.)

सतो हि जीवतो जीवं सर्वपापमपोहति । व्रतैः कृच्छ्रैस्तथा दानैरित्याह भगवान् यमः ॥
(p. 372 part II.)

VASISHṬHA.

बालैरनुपविद्धान्तः स्त्रीभिराचरितं च यत् । परिसंख्याय तान्सर्वाञ्छुचीनाह प्रजापतिः ॥
(p. 463 part II.)

मधुपर्के च यज्ञे च पितृदैवतकर्मणि । तत्रैव च पशुं हिंस्यान्नान्यथेत्यब्रवीन्मनुः (p. 464 part II.)

भागधेयं मनुः प्राह उच्छिष्टोच्छेषणे उभे ॥ (p. 475 part II.)

आहिताग्निश्चेत्प्रवसन्म्रियते पुनः संस्कारं कृत्वा शववच्छौचमिति गौतमः (p. 465 part II.)

तस्मादुदकपाणिभ्यां परिमृड्यात्कमण्डलुम् । पर्यग्निकरणं ह्येतन्मनुराह प्रजापतिः (p. 478 part II.)

मानवं चात्र श्लोकमुदाहरन्ति ॥ वपनं मेखला दण्डो भैक्ष्यचर्या व्रतानि च । निवर्तन्ते द्विजातीनां पुनः संस्कारकर्मणीति (p. 494 part II.)

VṚIDDHA GAUTAMA.

अश्वमेधे पुरा वृत्ते केशवं केशिसूदनम् ॥ धर्मसंशयकं दृश्य किमपृच्छत गौतमः ॥ (p. 497 part II.)

श्रुता मे मानवा धर्मा वासिष्ठाः काश्यपास्तथा । गार्गेया गौतमीयाश्च तथा गौपालितस्य च ॥ पराशरकृताः पूर्वमात्रेयस्य च धर्मतः । उमामहेश्वराश्चैव नन्दिधर्माश्च पावनाः ॥ ब्रह्मणा कथिता ये च कौमाराश्च श्रुता मया । धूम्रवर्णाः कृता धर्माः क्रौञ्चवैश्वानरा अपि ॥ भार्गव्या याज्ञवल्क्याश्च माण्डव्याः कौशिकास्तथा । भारद्वाजकृता येच ब्रह्मस्वकु(?)कृताश्च ये ॥ ये । सुमन्तुजैमिनिकृताः शाकलेयास्तथैव च ॥ पुलस्त्यपुलहोद्गीताः पाराशर्यास्तथैव च । अगस्त्यगीता मौद्गल्याः शाण्डिल्यास्तुलहायनाः ॥ वालखिल्यकृता ये च सप्तर्षिरचिताश्च ये । आपस्तम्बकृता धर्माः शङ्खस्य लिखितस्य च ॥ प्राजापत्यास्तथा याम्या माहेन्द्राश्च श्रुता मया । वैश्वानराख्या गीताश्च विभाण्डककृताश्च ये ॥ नारदीयकृता धर्माः कापोताश्च श्रुता मया । तथा विष्णोश्च वाक्यानि भृगोरङ्गिरसस्तथा ॥ क्रौञ्चमातङ्गगीताश्च सौधहारीतकास्तथा ॥ पिङ्गवर्मकृताः कान्ता ये च वा वसुपालिताः ॥ उद्दालककृता धर्मा औशनसास्तथैवहि । वैयाघ्रपादगीताश्च ये चान्येप्येवमादयः ॥ एतेभ्यः सर्वधर्मेभ्यो देवत्वाद्याश्च निश्चिताः । पावनत्वात्पवित्रत्वाद्विशिष्टा इति मे मतिः ॥ तस्माच्छ्रुत्वा प्रपन्नस्य त्वद्भिन्नस्य च माधव । युष्मदीयान् परान् धर्मान् पुण्यान् कथय मे ऽच्युत ॥ (p. 498 part II.)

| | | |
|---|---|---|
| Vasishṭha | precedes | Vṛiddha Háríta, Uśanas, Kátyáyana, Bṛihat-Paráśara, Laghu-Paráśara. |
| Kátyáyana | do. | Vṛiddha-Háríta, Laghu-Paráśara. |
| Paráśara | do. | Vṛiddha Gautama. |
| Bṛihaspati | do. | Laghu Atri, Kátyáyana. |
| Uśanas | do. | Ápastamba, Laghu-Paráśara, Vṛiddha-Gautama. |
| Ápastamba | do. | Vṛiddha-Gautama, Laghu-Paráśara. |
| Prajápati | do. | Vṛiddha-Gautama, Laghu-Vyása, Vasishṭha. |
| Hárita | do. | Laghu-Paráśara. |
| Yájñavalkya | do. | Vṛiddha-Gautama, Laghu-Paráśara. |
| Yama | do. | Śáṅkha, Vṛiddha-Gautama |
| Śáṅkha | do. | Vṛiddha-Gautama, Laghu-Paráśara. |
| Bhṛigu | do. | Vṛiddha-Háríta, Vṛiddha-Gautama, Kátyáyana. |
| Nárada | do. | Vṛiddha-Háríta, Vṛiddha-Gautama, Kátyáyana. |

The following remarks have suggested themselves in the course of preparing the above statements :—

There are several works under the name of the same reputed author, with titles but slightly changed, *e. g.* (1) Manu, Vṛiddha-Manu and Bṛihan-Manu; (2) Yájñavalkya, Vṛiddha-Yájñavalkya, Bṛihad-Yájñavalkya, and Yogi-Yájñavalkya; (3) Aṅgiras, Madhyama-Aṅgiras, and Laghu-Aṅgiras; (4) Gautama, Śloka-Gautama, and Vṛiddha-Gautama; (5) Paráśara or Laghu-Paráśara, and Bṛihat-Paráśara; (6) Hárita, Laghu-Hárita and Vriddha-Hárita; (7) Śátátapa and Vṛiddha-Śátátapa; (8) Kátyáyana and Vriddha-Kátyáyana; (9) Garga, and Vṛiddha-Garga; (10) Yama and Vṛiddhá-Yama; (11) Vishṇu, Laghu-Vishṇu, and Bṛihad-Vishṇu; (12) Saṅkha, Laghu-Śaṅkha, and Śaṅkha Likhita; (13) Vasishṭha, Vṛiddha-Vasishṭha and Śloka-Vasishṭha; and (14) Bṛihaspati and Vṛiddha-Bṛihaspati.

Two questions naturally arise from the above—viz., whether the name of an author when preceded by *Bṛihat* on the one hand and by *Vṛiddha* on the other signifies two different individuals; and secondly, whether works appearing under one name with *Vṛiddha* or *Bṛihat* sometimes prefixed to it are works of different authors, or have any common basis.

The first question admits of an easy solution; because the use of *Bṛihat* by some treatise-writers and of *Vṛiddha* by others in citing one and the same text is proof that they were used synonymously. Thus at page 82 ll. 10—13 and note 1, a verse is quoted by Kamalákara in his Viváda Táṇḍava as one from Vṛiddha-Manu, while the Vyavahára-mádhava attributes the same to Bṛihat-Manu. Again, the texts at p. 128 l. 28 and p. 129 l. 2 are quoted from Vṛiddha-Manu by Nílakaṇṭha, but they are attributed to Bṛihat-Manu by the Víramitrodaya (l. 129 p. 1 and l. 129 p. 2 respectively). This view is strengthened by one and

the same work being styled Bṛihat and Vṛiddha in two different places. Thus the Bṛihat-Paráśara in the Calcutta compilation of Smṛitis is called Vṛiddha-Paráśara in the University Collection.

There is a diversity of opinion on the second question. Śúlapáṇi while commenting on Yájñavalkya, I. vv. 4, 5, says:—"वृद्धशातातपलघुहारीतादीनामवस्थाभेदेनोक्त एवान्तर्भावः"

Translation:—[Names like] Vṛiddha Śátátapa and Laghu Hárita [signifying the same author] at different periods of life are included [in the given list],

The Víramitrodaya concurring with Śulapáṇi on this point observes:—

"वृद्धमनुवृद्धवसिष्ठवृद्धशातातपलघुहारीतयोगियाज्ञवल्क्यादयस्त्ववस्थाभेदेन सविशेषेण सञ्ज्ञाव्यपदेशभाजो मन्वादय एवेति न पृथगुक्ताः"

Translation:—"Vṛiddha Manu, Vṛiddha Vasishṭha, Vriddha Śátátapa, Laghu Hárita, Yogi Yájñavalkya and the like, being the same Manu, and the rest who got special names indicative of the different periods of life, have not been separately mentioned [in the list]."

This theory, plausible as it does look, does not commend itself to my judgment—I., because it leaves out of account the names which have Bṛihat prefixed to them; II., because it is inconsistent with the special mention of Vṛidda Śátátapa in the opening verse of the Smṛiti found under that name in the University Collection, and of Vṛiddha Gárgya in the Mahábhárata Anuśásanika Parvan (l. 165 p. 1 *line* 15), where the whole name appears clearly as the designation of one individual; III., the indiscriminate use of *Bṛihat* for *Vṛiddha* would be unaccountable if Vṛiddha is interpreted as signifying 'old,' as Messrs. West and Bühler have done (see their Introduction p. 16 note *a* to the Hindu Law, second edition). For these reasons I am inclined to hold that such works are productions of different individuals, and that their being named after the same author is due to the one being an expansion or an epitome of the other. I am confirmed in this opinion by a likelihood of the terms *Bṛihat* and *Vṛiddha* being epithets more of the works than of the authors, just as a similar prefix *śloka* (metrical) in words like śloka-Gautama and śloka-Vasishṭha undoubtedly is.

There are no data for deciding whether the epitomes or the larger works are of a later date as compared with each other; but I may state that the larger works appear in several instances to be the subsequent productions; because except on such a supposition it is hard to explain how Gautama could be referred to in Vṛiddha-Gautama (see the Calcutta Smṛitis Part II. p. 498), and how Vasishṭha could precede and be referred to in Vṛiddha-Gautama, when Gautama precedes and is mentioned in Vasishṭha (see above p. xxii).

As regards the composition of the Smṛitis, Appendix I. will give some of my views. Nothing can be yet definitively pronounced. As I said before, some take Smṛitis as Śrutis preserved by tradition. Others

consider them as supplements to Sútras. Others again hold them to be dissertations or compilations of approved usages and customs promulgated at different times by or under the sanction of eminent sages or their followers. Some are evidently sectarian works. Some are compilations from other writers; while others, as they now stand, are confined to particular subjects or branches of particular subjects.

I have in my above remarks placed the Smritis after the Sútras, 1st, because the Sútras are, as a class, older than Smritis; and 2ndly, because the latter have been expressly included in the Vedángas, while the former are not. It seems, however, that where the same authors have composed both Sútras and Smritis, there are grounds for holding that both works were done by the same agency. Thus Áśvaláyana in his Smriti in the verses given below states that he composed the Smriti which bears his name, after composing his own *Śráuta* and *Gṛihya* Sútras on the same subject:—

हिमवन्तं समाश्रित्य पुराणं परमेश्वरम् । तोषयित्वा सुतपसा शास्त्रमेतद्धि लब्धवान् ॥ उत्पत्तिं च निरोधं च भूतानामागतिं गतिम् । वेद विद्यामविद्यां च प्रसादाच्छूलपाणिनः ॥ अनागतमतीतं च वर्तमानं जगत्सु यत् । तपसा विदितं विप्रा मया तावत्क्षणादिव ॥ श्रौतस्य कर्मणः सिद्ध्यै श्रौतसूत्रं मया कृतम् । तदेतन्मृदु गम्भीरं गभीरार्थं शिवप्रदम् ॥ सुदुर्ज्ञेयं च विदुषां मनसां प्रीतिवर्धनम् । श्रौतस्यैव च यद्भाष्यं मयैव हि कृतं द्विजाः ॥ गृह्यभाष्यं करिष्यन्ति द्विजा इति न मे कृतम् । यथा वैते करिष्यन्तीत्येकाग्रमनसा स्थितः ॥ अचिन्तयदिदं सर्वं सर्वतो दिव्यचक्षुषा । दृष्ट्वा करिष्यमाणानां भाष्याणां चाग्रथातथम् ॥ विदित्सुभिस्तु विप्रेन्द्रैरद्राक्षं वितथा क्वचिन् । कारिष्यमाणमालोच्य तैर्यद्वितथमात्मनः ॥ तद्भाष्यादिषु गृह्यस्य निमृजन्निदमुक्तवान् । मदीयस्य तु गृह्यस्य भाष्यकृद्वृत्तिकृच्च यः ॥ निघण्टुकारिकाकृद्यश्चिते च चतुरो द्विजाः । विद्वांसोपि महात्मानो विप्राः शास्त्रस्य चक्षुषः ॥ सम्यक् ममेह जानन्तो विमृशन्तश्चिकीर्षितम् । इति ज्ञात्वा कृतमिदं शास्त्रं प्रागेव मे शुभम् ॥ गोपनीयमिदं शास्त्रमित्युक्तं शम्भुना पुरा । तस्मान्मया न केषांचिदितः पूर्वं प्रकाशितम् ॥ कृत्वा पुनश्चाप्रकाश्यं तपश्चातिष्ठवानहम् । तपसोन्ते पुनः प्राह भगवान्मां महेश्वरः ॥ सुप्रसन्नं सुगम्भीरं सुश्लक्ष्णं वाक्यमादरात् । तन्मुखान्निसृतं शास्त्रं वेदसारमिदं शुभम् ॥ तावत्ते गोपनीयं स्यात्संशयघ्नं मयाज्ञया । सर्वेषामपि वाक्यानां संशयच्छेदनं भवेत् ॥ एतेन मम शास्त्रेण कलौ मूढात्मनां नृणाम् । एतच्छास्त्रस्य विप्रेषु वैदिकेष्वतिसाधुषु ॥ मद्भक्तेषु विशेषेण सदाचारपरेषुच । अवैदिकेष्वशान्तेषु प्रद्विषत्सु द्विजातिषु ॥ नैव स्थास्यति विप्रेन्द्र शास्त्रमेतदनुत्तमम् । इति पूर्वमनुज्ञाप्य मामीशः परमेश्वरः ॥ तस्मादन्तर्दधे देशात्तस्मै चाकरवं नमः । तस्माददृष्टमृषिभिरितः प्राक् कैश्चिदुत्तमम् ॥ शास्त्रमेतदिदानीं तु मया वः संप्रकाशितम् । एतच्छास्त्रमदृष्ट्वा तु कृत्वा भाष्यादिकान् द्विजाः ॥ अन्यशास्त्रं समालोच्य मृतास्ते त्रिदिवं गताः । वैपरीत्यात्कृतं तैर्यदकृतं च यथा कृतम् ॥ भाष्यादिषु पुरा दृष्ट्वा मत्कृतं तदिहोच्यते । तैर्यथावत्कृतं तेषु शास्त्रेस्मिन्न मयोदितम् ॥ पुनरुक्तं क्वचित् किंचित्स्वीकार्यार्थमिहोदितम् । अनुग्रहाय मन्दानां क्वचित्किंचिन्मयोदितम् । शास्त्रेस्मिन्नोदितं यत्तन्निबोधध्वं यथायथमिति ॥

In regard to Kátyáyana Sútra and Smriti, the same inference is deducible from a comparison of parallel passages on various identical subjects.

In some cases, however, it appears that the composition of the Smriti has preceded that of the Sútras. Thus the Víramitrodaya in its comments

on v. 3 of the Áchárádhyáya of Yájñavalkya says :—गृह्याणि स्मृतिरूपाण्येव. Translation :—The *Grihyas* are of the same nature as Smritis.

Similarly, Devala cited in Kokila's work (which though ordinarily known as Kokilasmriti, appears from its mode of citation and many other similar indications to be a treatise by a later writer) says :—

मन्वादयः प्रणेतारो धर्मशास्त्रस्य कीर्तिताः॥ तत्प्रयुक्तप्रयुक्तारो गृह्यकाराः स्वमन्वतः ॥

Translation :—Manu and the like are known as the authors of *dharmaśástra*; [while] the authors of *Grihyas* lay down the ritual proper to the precepts inculcated by Smritis, each according to his Veda.

Again, it is to be observed that the word Smriti itself is very indefinite in its signification, and has been so used by eminent writers. The Bhagavadgíta, which is undoubtedly older than Páṇini and other Sútra writers, has been treated throughout as a Smriti by Śankaráchárya,[1] who quotes its authority along with that of the Upanishads and other portions of the Vedas. Nor is this practice confined to writers of a particular period. The Samskára Mayúkha includes the *Ayurveda* (medical science) amongst Smritis.[2] Bhaṭṭa Yájñeśvara quotes in his Áryavidyá Sudhákara, a verse from the Vishṇu Sahasranáman in the Mahábhárata as a Smriti.[3] These are not solitary instances. The Puráṇas are daily cited to the people for the same purpose.

The origin of Smritis is thus lost in antiquity. The Rishis are their reputed authors or rememberers, and as such they are often styled as the introducers of Dharmaśástra. The Vedas themselves contemplate a division of Rishis into ancient and modern.[4] The mention of ancient *ṛishis* or sages in the Rigveda[5] as *pathikṛitah* (indicators of the right path) would be an argument in favour of the antiquity of Smritis; because no works on *dharmaśástra* are ascribed to *ṛishis*, except the Sútras and the Smritis.

In all these investigations, one thing must, however, be borne in mind, namely, that these works are explanatory of *dharma* as received by tradition; and where the tradition has been lost or has become

[1] Bráhma Sútra, vol. I., Cal. Ed. pp. 77 [l. 12], 87 [l. 11], 92 [l. 5], 112 [lines 10—13], 113 [ll. 4—6], and so on to the end of vol. II. The same is the case with more recent authors even on Vedic ceremonials. Thus Rámádára in his comment on the Dhúrtasvámí Bháshya on the Ápastamba Śrauta Sútra (विज्ञानं मन्त्रलिङ्गेन ।) quotes Bhagavadgita iv., 24, ix., 23—27, &c. as Smriti. [MS.]

[2] एवमायुर्वेदादीनामपि स्मृतित्वं । MS.

[3] Bombay A. C. 1868, page 250 :—नमोस्त्वनन्ताय सहस्रमूर्तये इत्यादिस्मृतेश्च ॥

[4] Rigveda Samhitá, I. 1, 2 "अग्निः पूर्वेभिर्ऋषिभिरीड्योनूतनैरुत । सदेवाँ एहवक्षति ॥ २ ॥" Prof. M. Müller's Ed. vol I. p. 48.

[5] See Rigveda X. 14, 15; यमाय मधुमत्तमं राज्ञे हव्यं जुहोतन । इदं नम ऋषिभ्यः पूर्वजेभ्यः पूर्वेभ्यः पथिकृद्भ्यः The words पूर्वेभ्यः पथिकृद्भ्यः are explained by Sáyaṇa to mean पूर्वेभाविभ्यः शोभनमार्गकारिभ्यः (to early dictators of good path).

obsolete, the Smṛiti becomes useless. It is said that Smṛiti comes after Śruti, and in a conflict between them the latter prevails. But this is not always so.[1]

Smṛitis are often figurative.[2] History is often brought in to explain them.[3] They are often called in to explain one another as will be seen from Appendix I. That certain Smṛitis should refer to certain Śákhás would appear natural in the case of those which are written by these Śákhás. But according to Kamalákara[4] it would appear that each Smṛiti refers to a separate Śákhá. For when writing on Śráddha, (a ceremony common to all Áryans to whatever Śákhá they may belong,) he says that the giving of *Arghya* is to be done according to the Śákhá, and he quotes Áśvaláyana, Játúkarṇya, Baijavápa, Vishṇu, and Manu from the Smṛiti writers, and Hemádri, Mádhava, Harihara, the Gṛihya Sútras of Baijavápa and the Bráhma Puráṇa, to fortify himself in regard to the practice on the subject.

Certain Smṛitis would appear to be written in certain countries; and others in other countries. I conclude this from their describing one and the same measure in different quantities. Thus *Gacharman* is a land measure; and Bṛihaspati, Vasishṭha, Prajápati cited in Mátsya Puráṇa,

---

[1] See, for example, Mádhava's Statement in his comment on ch. iii. of Parásara, that a *samánodaka*, bearing a corpse to the burning ground, has to undergo an impurity of ten days on the strength of a text of Devala, which runs thus :— यः समानोदकमेतं वहेद्वाथ दहेत वा । तस्याशौचं दशाहं तु अन्येषां च त्र्यहं विदुः ॥

The same precept is repeated in the Nirṇayasindhu *parichchheda* iii. chapter on impurities l. 10 p. 1, and in the Dharmasindhu *parichchheda* iii. 2nd half l. 44 p. l. But this is nowhere observed at present. Any bearer of a Hindu corpse has to observe a fast until the rise of the stars in the evening, but even this is getting obsolete in large cities; while in the case of the *Samánodakas*, they have to observe no additional impurity on account of the bearing of the corpse, and observe mourning only for three days, if they learn of the death within ten days. The *sagotra sapiṇḍas* alone observe impurity for ten days under similar circumstances. It is clear therefore that custom has so far abrogated the above Smṛiti law.

(2.) The following observations of Lakshmaṇabhaṭṭa, junior brother of Kamalákara, in his work named Achárasára in regard to discordant injunctions of Smṛitis on the same subject are useful. He says:—केचित्तु तुल्यार्थत्वेपि मनुविपरीता स्मृतिः सा न प्रशस्यते इति बृद्धबृहस्पतिस्मृतेरन्यस्मृतीनां प्रामाण्यं न तु विकल्प इत्याहुस्तत्र प्रत्यक्षश्रुतिविरोधेपि स्मृतीनामप्रामाण्यं नास्तीत्युक्तमाचार्यैर्विरोधाधिकरणे किंत्वनवुष्ठानलक्षणं तत् । स्मृतिविरोधे त्वप्रामाण्यं दूरापास्तम् । (MS.)

The substance of this passage is that a Smṛiti is not unauthentic merely because it contradicts a passage of the Veda. It is unauthentic merely so far as it is not followed : much more will the same remark apply if one Smṛiti contradicts another Smṛiti.

[2] For example—see Manu ch. vii. vv. 105, 106, 110, 112, 121, 134.

[3] See Manu ch. vii. vv. 40 to 42; ch. ix. vv. 23, 24, 44, 66, 128 and ch. x., vv. 105 to 108.

[4] See Nirṇayasindhu [3rd *Parichchheda*, Śráddha Prakaraṇa] l. 31, p. 2.
अत्रावाहनमासमाप्त्यूर्वं वाऽर्घ्यपूरणोत्तरं वाग्नौकरणोत्तरं वेति स्मृतिषु पक्षा उक्ताः ।
एषां शाखाभेदेन व्यवस्था । द्वितीयपक्ष एव बहुसंमतः ।

Vṛiddha Vasishṭha give different quantities for the same measure.[1] One might account for the difference by supposing these works to be written at different times in the same country; but the other is the more probable inference; for the different *Gotras* represented by the different Ṛishis above named have evidently been originally inhabitants of different places.[2]

It is said that where there is a conflict between the Śruti and the Smṛiti, the former is to be obeyed. But this is not always so in practice. In like manner, in a conflict between the Smṛitis and the Puráṇas it is said that the latter should give way.[3] This was the theory, but in practice, as we shall see further on, the Smṛitis have hardly much scope left. The present *Áchára* (practice) is more influenced by the Puráṇas than by the Smṛitis. Kamalákara in the Nirṇayasindhu and in the *Dána* Kamalákara, Púrta Kamalákara and Śúdra Kamalákara introduces a large Puráṇik element; and the first three also draw considerably on astrological and astronomical authorities. The same is done by Nilakaṇṭha in his 12 Mayúkhas. Even older writers like Hemádri do the same. I shall therefore make a few observations on the Puráṇa portion of the Dharmaśástra literature. Puráṇas are of two classes—the *mukhya* or the great, and the *upa* or secondary. As regards numbers, all the authorities agree in fixing the number of both at *eighteen*.[4] Their extent and the time of composition are however uncertain.

[1] See Hemádri's Vratakhaṇḍa, vol. I. pp. *52*, *53*.

[2] See Samskárakaustubha, leaf 7, p. 2 and l. 8, p. 1, where the planets to whom certain Gotras are assigned are invoked as inhabitants of different countries :—

| *Name of the Planet.* | *His Gotra.* | *His place of Residence.* |
|---|---|---|
| *Súrya* (Sun) ..... | Káśyapa ..... | Kalinga. |
| *Soma* (Moon) ..... | Átreya..... | The banks of the Yamuná river. |
| *Mangala* (Mars)..... | Bháradvája ..... | Avantí (Ujjayiní). |
| *Budha* (Mercury) ..... | Átreya..... | Magadha (Behar). |
| *Guru* (Jupiter) ..... | Angiras ..... | Sindhu (Sind ?). |
| *Śukra* (Venus) ..... | Bhárgava..... | Bhoja Kaṭa. |
| *Śani* (Saturn) ..... | Káśyapa ..... | Saurásḥṭra (Kattywar). |
| *Ráhu* (The ascending node) ..... | Paiṭhinasí ..... | Ráthinápur. |
| *Ketu* (The descending node)..... | Jaiminí ..... | Antarvedi. |

[3] प्रयोगपारिजातसंस्कारकाण्डे लौगाक्षिः श्रुतिस्मृतिविरोधे तु श्रुतिरेव गरीयसी । "संग्रहे ॥ श्रुतिस्मृतिपुराणेषु विरुद्धेषु परस्परम् ॥ पूर्वं पूर्वं बलीयः स्यादिति न्यायविदो विदुः ॥ हिं० ध० ६

[4] Bhágavata Puráṇa, xii. 13, 4—8 :—[5] ब्राह्मं दशसहस्राणि पाद्मं पञ्चोनषष्टि च । श्रीवैष्णवं त्रयोविंशचतुर्विंशतिशैवकम् ॥ ४ ॥ दशाष्टौ श्रीभागवतं नारदं पञ्चविंशतिः । मार्कण्डेयं नव वाह्नं तु दशपञ्चचतुःशतम् ॥ ५ ॥ चतुर्दश भविष्यं स्यात्तथा पञ्चशतानि च । दशाष्टौ ब्रह्मवैवर्तं लिङ्गमेकादशैव तु ॥ ६ ॥ चतुर्विंशतिवाराहमेकाशीतिसहस्रकम् । स्कान्दं शतं तथा चैकं वामनं दश कीर्तितं ॥ ७ ॥ कौर्मं सप्तदशाख्यातं मात्स्यं तत्तु चतुर्दश ॥ एकोनविंशत्सौपर्णं ब्रह्माण्डं द्वादशैव तु ॥ ८ ॥"

Káśikhaṇḍa, Adhyáya I, Commentary, quoting from Váraha gives the following number :— ब्राह्मं पाद्मं वैष्णवं च शैवं भागवतं तथा । तथान्यन्नारदीयं च मार्कण्डेयं च सप्तमम् ॥ १ ॥ आग्नेयमष्टमं प्रोक्तं भविष्यन्नवमं तथा । दशमं ब्रह्मवैवर्तं लिङ्गमेकादशं तथा ॥ २ ॥ वाराहं द्वादशं प्रोक्तं स्कान्दं चात्र त्रयोदशम् । चतुर्दशं वामनं च कौर्मं पञ्चदशं तथा ॥ ३ ॥ मात्स्यं च गारुडं चैव ब्रह्माण्डमष्टादशं तथा ॥" Hemádri's Dána Khaṇḍa, pp. *53*, *54* gives the above and other Puráṇas according to other authorities.

The extent of the chief Puráṇás will appear from the following table:—

| | According to the Bhágavata Puráṇa. | According to the Mátsya Puráṇa. |
|---|---|---|
| Bráhma | 10,000 | 10,000 |
| Pádma | 55,000 | 55,000 |
| Vishṇu | 23,000 | 23,000 |
| Śiva | 24,000 | [1] |
| Bhágavata | 18,000 | 18,000 |
| Nárada | 25,000 | 25,000 |
| Márkaṇḍeya | 9,000 | 9,000 |
| Agni | 15,400 | 16,000 |
| Bhavishya | 14,500 | 14,500 |
| Brahmavaivarta | 18,000 | 18,000 |
| Linga | 11,000 | 11,000 |
| Váráha | 24,000 | 24,000 |
| Skánda | 81,100 | 81,100 |
| Vámana | 10,000 | 10,000 |
| Kaurma | 17,000 | 17,000 |
| Mátsya | 14,000 | 14,000 |
| Sauparṇa (Gáruḍa) | 19,000 | 19,000 |
| Brahmáṇḍa | 12,000 | 12,200 |
| Total Verses | 4,00,000 | 376,800 |

The number of Upa-Puráṇas, also fixed by ordinary writers at 18, is, like that of the Upa-Smṛitis, practically indefinite. The principal eighteen Upa-Puráṇas are the following:—1, Sanatkumára; 2, Nárasimha; 3, Bṛihannáradíya; 4, Śivarahasya; 5, Durvásas; 6, Kápila; 7, Vámana (there is one principal Puráṇa thus named); 8, Bhárgava; 9, Váruṇa; 10, Káliká; 11, Sámba; 12, Nandí; 13, Saura; 14, Parásara; 15, Vásishṭha; 16, Devi-Bhágavata; 17, Gaṇeśa; 18, Hamsa. [See Bhágavata with *Chúrnika* commentary xii. 13, 8 (comments), leaf 27 p. 1.]

There are other Puráṇas[2] besides:—1, Mudgala; 2, Reṇuká; 3, Vishṇudharmottara; 4, Sívadharmottara; 5, Kumára; 6, Váyu; 7, Ambiká; 8, Maríchi; 9, Aušanasa; 10, Máheśvara; 11, Laghunárada; 12, Pásúpata; 13, Bhavishya. Many of these are not now available. A good portion of these works has been probably lost; but a considerable quantity can yet be recovered. At all events more of the Puráṇas are

[1] The Matsya puts Váyu instead of Síva; but the number of verses is the same, namely, 24,000.

[2] See Gaṇesa Puráṇa, MS.

now available than the Smṛitis; and they are now followed to a greater extent by the people generally than either the Śrutis or the Smṛitis.

The Mahábhárata is considered superior to all, next only to the Vedas. Most of the Smṛitis appear to have largely drawn upon it. Although, it is now said that the Śmṛitis are older, they do not appear to be quite so according to the authorities.

The Puráṇas are distinctly alluded to in the Vedas.[1] Their recitation is ordered to be observed as part of the daily ritual.[2] From the order in which they are directed to be recited, they appear to rank after histories like the Mahábhárata, and before the Kalpa Sútras. A universal practice of an order thus distinctly laid down is so far decisive of their precedence over the Kalpa Sútras themselves; much more so must it be over the Dharma Sútras, as well as over the Smṛitis. A complete and critical edition of the Puráṇas may enable us better to discuss their comparative antiquity both in reference to Smṛitis and in reference to each other, and this would be also necessary to a proper understanding of the present state of the Dharmaśástra. Because current popular usages and most of the popular ceremonies, to the discussion and investigation of which the Dharmaśástra is largely devoted, derive their origin from the Puráṇas. The different modes of popular worship are traceable to the same source.

To arrive at a complete understanding of the Dharmaśástra, an examination of the current popular ceremonies is necessary. With that view, I shall divide them under the following heads, under which they are generally treated by the *Prayoga* writers:—

| | |
|---|---|
| I. Samskáras. | IV. Dána. |
| II. Sántis. | V. Śráddhas. |
| III. Vratas. | VI. Práyaschittas. |

*Division I.*—Samskáras.

The original number prescribed for the Bráhmaṇas and other twice-born classes is forty-eight.[3]

---

[1] Taittiríya Bráhmaṇa káṇḍa III. Prapathaka XII. Anuváka VIII. Daśaka II. इतिहासपुराणं च | Sáyaṇa's *Bhúshya* on this line runs thus, see p. 854:—इतिहास: भारतादि: पुराणं ब्राह्मादि. Taittiírya Áraṇyaka, see pp. 235—237.

[2] Áśvaláyana Gṛihya Sútra, pp. 160 Taittiríya Áraṇyaka p. 236.

[3] See the Samskara-ratna Málá of Gopínáth Díkshita. They are as follows:—

1. Garbhádhánam.
2. Pumsavanam.
3. Símantonnayanam.
4. Játakarman.
5. Námakaraṇa.
6. Annaprášána.
7. Chaulam.
8. Upanayanam.
9 to 12. Veda-vratáni.
13. Snánam (Samávartanam).
14. Sahadharmacháriṇísamyogah (Viváhah).
15 to 19. Panchamaháyajñáh.
20. Ashṭakáh.
21. Párvaṇah (Sthálípákáh).
22. Śráddham (Darśá).
23. Śrávaṇí [Śravṇaákarma].
24. Agraháyaṇi [Pratyavarohaṇam].

Angiras reduces the above number to 25. Thus :—

1—3. As in the above list.
4. Vishṇubali.[1]
5—6. Nos. 4 and 5 of the first list.
7. Nishkramaṇa[1]
8—16. Nos. 6 to 14 respectively of the first list.
17. Agrayaṇa.
18. No. 20 of the first list.
19—20. Nos. 23, 24, do.
21. No. 26 do.
22. No. 21 do.
23. Utsaragah.[1]
24. Upâkarman.[1]
25. Nos. 15 to 19 do.

All the rest are left out.

These changes are based on the authority given below.[2]

Out of these *Jâtakarman* and *Nâmakaraṇa* are performed in many cases. So is *Annaprâśana*. All the rest in the case of males are performed by giving some pecuniary penance at the time of the *Upanayana* ceremony. In the case of females, these ceremonies are generally not performed. But in their stead, women are invited on certain occasions, especially on the fifth, sixth and twelfth days after birth, and at various times during pregnancy without any warranty either from the Sûtras or Smritis; and at these times the deities that are worshipped are either derived from the Purâṇas or Tantras, or from local legends; and more often from family tradition. Gaṇeśa, Śakti under various forms, Skanda and other *gaṇas* are worshipped at these times. These have no place in the *Smṛiti* literature, and rest on tradition and usage. The *Upanayana* is the great Vedic ceremony of the twice-born classes. This according to

25. Chaitri [Sulagavah].
26. Aśvayuji [Aśvayujiskarma].
27. Agnyádhéyam.
28. Agnihotram.
29. Darśapúrṇamásam.
30. Châturmásyáni.
31. Agrayaṇéshṭi.
32. Nirúdhapaśubándhah.
33. Sautrâṇi (Haviryajña).
34. Agnishṭomah.
35. Atyagnishṭomah.
36. Ukthyah.
37. Shodashi.
38. Vâjapeyah.
39. Atirâtrah.
40. Aptoryámah.
41. Payá.
42. Sarvabhútéshukshántih.
43. Anasúyá.
44. Sancham.
45. Anáyasah.
46. Mángalyam.
47. Akárpaṇyam.
48. Aspriha.

[1] New Samskâras added.

[2] Angiras :—गर्भाधानं पुंसवनं सीमन्तो बलिरेव च । बलिर्विष्णुबलिः । जातकृत्यं नामकर्म निष्क्रमोऽन्नाशनं तथा । चौलकर्मोपनयनं तद्व्रतानां चतुष्टयम् ॥ स्नानोद्वाहौ चाग्न्याधेयमष्टकाश्च यथायथम् । श्रावण्यामाश्वयुज्यां च मार्गशीर्ष्यां च पार्वणम् ॥ उत्सर्गश्चाप्युपाकर्म महायज्ञाश्च नित्यकाः । संस्कारा नियता एते ब्राह्मणस्य विशेषतः ॥ पञ्चविंशतिसंस्कारैः संस्कृता ये द्विजातयः । ते पवित्राश्च योग्याः स्युः श्राद्धादिषु सुयन्त्रिता इति ॥

Manu ch. ii. v. 140[1] was performed by the preceptor. According to Yájñavalkya ch. i. v. 15 it is still the preceptor who has to perform the ceremony. After the *upanayana* and up to marriage, the student is ordered to reside with his preceptor and study the Vedas. But all this part of the ceremonial has been changed. The father now performs what can hardly be called an *upanayana*, but may fitly be described as the thread ceremony as it is now known; and all this has been brought about by custom, which is being changed from time to time, and has changed the whole course of the life of the twice-born classes in India. A few students do still study the Vedas, but not as in the times of old; and the *upanáyana* ceremony, properly so called, ends within a few days, and is an occasion of family rejoicing, and not of study and meditation, as it is intended to be.

The next ceremony is marriage, and here too custom has made great havoc on the Smriti law. A mere semblance of the ceremonial is kept up among the higher classes. Amongst the lower ones, the ceremony consists in giving and receiving feasts, and one or more processions according to the means of the parties. All the Grihya ceremonies have been based on the institution of marriage; but the rules have been broken to such an extent, that instead of the sacrificial fire lighted at the celebration of marriage being carried along with the married pair to their future home, and religiously kept up till the husband and the wife's bodies are sacrificed therein on the funeral pile, it is now considered positively inauspicious to carry such a fire at the head of the procession, as it ought to be, and in the majority of instances, after the marriage is over, it is never lighted at all. And when the married people die, a certain nominal penance in money is performed at the burning ground for the extinction of such a fire.

The above completes the list of Samskára ceremonies. As for the fourteen sacrificial *samsthás*, they are, as a rule, not performed by one out of a thousand individuals; and even their names are hardly known except to a select few. Some of the chief *prayoga* works, according to which the *Samskáras* are performed, have been mentioned before. There are besides numerous works styled *Paddhatis* and *Kalpas*, both ancient and modern, on this part of the Dharmaśástra.

## *Division II.*—Śántis.

The next head of ceremonies are the *Śántis*, or propitiatory ceremonies against evil. So far as Yájñavalkya is concerned, we have only two in the whole of the first chapter, viz., Vináyaka Śánti (vv. 270 to 293),

[1] उपनीय तु यः शिष्यं वेदमध्यापयेद्द्विजः । सकल्पं सरहस्यं च तमाचार्यं प्रचक्षते ॥ Translation:—That *dvijá* (twice-born) who having carried the student [to himself] teaches [him] the Veda along with the *Kalpa* [Sútra] and the secret [science of the Upanishadas] is called an Áchárya.

and Graha Śánti (vv. 294 to 307). As regards the first, it has almost gone out of use, and as regards the second, the ceremonial now adopted is conducted in the manner laid down in the Śaunaka *káriká*, and is essentially different from what Yájñavalkya contemplated it. The Śánti division of ceremonial has been growing every day, and if Manu came to life, he would probably be astonished both at the number and character of the *Śántis* or propitiatory ceremonies now actually observed. The accidental blowing out and fall of a lamp, the fall of a lizard, the occurrence of a frightful dream, the entrance of a crow into a house, &c. &c., are all subjects of a *Śánti* ceremony.

Looking at several works now current on the subject, the following results appear:—

Out of 57 *Śántis* described in the Śánti-Mayúkha, two appear to derive some foundation from the Sútras, one from the Aitareya Bráhmaṇa, one (which has already been mentioned as having nearly gone out of use) from Yájñavalkya, and all the rest are based either on Puráṇas and astrological works, or other similar authorities of a very late origin. 31 out of the above are on account of inauspicious views of the planets, the 27 lunar mansion stars, the days of the week, and certain conjunctions of the sun and the moon.

The Śántisára of Dinakarabhaṭṭa, son of Rámakṛishṇa, and grandson of Náráyaṇabhaṭṭa of Benares, when analyzed, gives the following result:—

| | | |
|---|---|---|
| Śántis | (propitiatory ceremonies) founded on the Aitareya Bráhmaṇa of the Ṛig-veda | 1 |
| Do. | on the Baudháyana and Áśvaláyana Sútras | 3 |
| Do. | on the Puráṇas | 10 |
| Do. | on Astrological Samhitas and modern astrological and other treatises | 51 |
| Do. | on Tantras | 1 |
| | | 66 |

Although the sources are different, the matter is nearly the same, namely, bad omens chiefly connected with astrology. A very modern work like Adbhuta-sára supplies four, and a treatise on horses furnishes materials for one.

### *Division III.*—Vratas.

Going now to the third section of ceremonies, viz., Vratas, we find the same neglect of the Smṛitis and Śrutis, and a more extensive adoption of the Puráṇic authorities.

The Vratárka of Śankarabhaṭṭa, son of the Nilakaṇṭhabhaṭṭa of Benares (which is now followed almost throughout India), gives the

following Vratas, together with the sources to which they owe their origin :—

| *No.* | *Sources.* | |
|---|---|---|
| 1 | Vámana Puráṇa. | |
| 3 | Bráhma ,, | |
| 2 | Áditya ,, | |
| 1 | Pádma ,, | |
| 1 | Varáha ,, | |
| 5 | Vishṇu-dharmottara Puráṇa. | |
| 24 | Bhavishya ,, | |
| 3 | Śiva ,, | |
| 12 | Skánda ,, | |
| 1 | Matsya ,, | |
| 4 | Bráhma ..... | Puráṇas as cited by Hemádri, and apparently not accessible to the author in original. |
| 2 | Nárada ..... | |
| 1 | Varáha ..... | |
| 1 | Káli ..... | |
| 1 | Nṛisimha ..... | |
| 17 | Bhavishya ..... | |
| 2 | Deví ..... | |
| 18 | Skánda ..... | |
| 2 | Saura ..... | Puráṇas quoted from Madanaratna. |
| 1 | Skanda ..... | |
| 1 | Áditya ..... | |
| 1 | Vishṇu-Dharma ..... | |
| 1 | Madanaratna | |
| 1 | ,, and Hemádri, | |
| 1 | Bhavishya Puráṇa quoted in Skanda. | |
| 1 | Vishṇu-rahasya. | |
| 1 | ,, quoted from Hemádri. | |
| 1 | Śivarahasya. | |
| 1 | Rudra-yámala and Linga Puráṇa. | |
| 1 | Vishṇu Yámala. | |
| 1 | Dvádaśí-vrata well known in the Gurjara country. | |
| 113 | | |

The above may be thus summarized :—

| | |
|---|---|
| Vratas founded on Puráṇas..... | 110 |
| Do. on Tantras ..... | 2 |
| Do. on mere popular usage ..... | 1 |
| | 113 |

Another current work on Vratas[1] is the Vratakaumudí by Śaṅkara, son of Ballála Bhaṭṭa Ghâre. It contains 128 Vratas : all but three being founded on the Puráṇas.

[1] The following is a table showing the number of Vratas and the sources whence they originated :—

| *No.* | *Sources.* | |
|---|---|---|
| 48 | Bhavishya Puráṇa. | |
| 27 | Skánda ,, | |
| 3 | Áditya ,, | |
| 9 | Pádma ,, | |
| 2 | Varáha ,, | |
| 1 | Bráhma ,, | |
| 8 | Vishṇu Dharmottara Puráṇa. | |
| 1 | Káli ,, | |
| 1 | Śiva-Dharmottara ,, | |
| 1 | Náradíya ,, | |
| 2 | Brahmánda ,, | |
| 1 | Bṛihannáradíya ,, | |
| 1 | Váyu Puráṇa. | |
| 2 | Agni ,, | |
| 4 | Bhavishya and Skánda Puráṇa. | |
| 8 | Bhavishya } Quoted from Hemádri. | |
| 2 | Skánda } | |
| 1 | Saura-dharma. | |
| 1 | Vishṇu-Rahasya. | |
| 2 | Śiva-Rahasya. | |
| 1 | Vishṇu-Yamala. | |
| 1 | Śaunakíya. | |
| 1 | Hemádri. | |

The Vratarája, which is the leading work on Vratás on this side of India, has altogether 205 Vratas. They are all based on the Puránas, and may be classified as below :—

| No. of | Their Sources. |
|---|---|
| 44 | Skánda Puráṇa. |
| 61 | Bhavishya. |
| 2 | Saura. |
| 1 | Wámana. |
| 3 | Nárada. |
| 2 | Ganeśa. |
| 10 | Bráhma. |
| 1 | Vishṇu-Dharmottara. |
| 3 | Deví. |
| 1 | Harivaṁśa. |
| 5 | Áditya. |
| 4 | Varáha. |
| 1 | Kúrma. |
| 7 | Brahmhavaivarta. |
| 2 | Pádma. |
| 2 | Váyu. |
| 1 | Vishṇu. |
| 3 | Bhavishyottara. |
| 1 | Skánda and Bhavishya. |

| No. of | Their Sources. | |
|---|---|---|
| 1 | Śiva Puráṇa ..... | Citing Achára (usage). |
| 2 | Skánda Puráṇa..... | |
| 19 | Bhavishya ..... | |
| 1 | Káliká ..... | Taken from Hemádri. |
| 3 | Matsya and Pádma. | |
| 1 | Vishṇudharma ..... | |
| 1 | Vishṇurahasya ..... | |
| 1 | Aditya Puráṇa ..... | |
| 2 | Skánda Puráṇa ..... | |
| 1 | Vishṇudharma (cited by Mádhava and Ratnákara). | |
| 1 | Vishṇurahasya. | |
| 2 | Śivarahasya. | |
| 1 | Agastya Saṁhitá. | |
| 8 | Sanat-Kumára Saṁhitá. | |
| 6 | Hemádri. | |
| 1 | Mahábhárata. | |
| 205 | | |

## *Division IV.*—Dána.

I now come to the ceremonies consisting of *Dána* (gift). In the present age, Dána has an importance of a peculiar character. Bṛihaspati, Śatapatha, Bráhmaṇa, Kúrma-Puráṇa, Agni-Puráṇa and the Mahábhárata are cited by Hemádri in support of making *Dána* (gifts)[1] :—

---

[1] Hemádri Dána-Khaṇḍa, Calcutta edition, p. 6.

Śatapatha Bráhmaṇa :—

तदेतत्त्रयं शिक्षेत दमं दानं दयामिति । दानेन भोगी भवति मेधावी वृद्धसेवया । अहिंसया च दीर्घायुरिति प्राहुर्मनीषिणः ॥ यतीनां परमो धर्मस्त्वनाहारो वनौकसाम् । दानमेव गृहस्थानां शूद्रा ब्रह्मचारिणाम् ॥ पापकर्मसमायुक्तं पतन्तं नरके नरम् । वायते दानमेकं तु पारभूते द्विजे कृतम् ॥ तथा । न्यायेनार्जनमर्थानां वर्धनं चाभिरक्षणम् । सत्पात्रप्रतिपत्तिश्च सर्वशास्त्रेषु पठ्यते ॥

Bṛihaspati :—

तथा धर्मः कृतयुगे ज्ञानं त्रेतायुगे स्मृतम् । द्वापरे चाध्वराः प्रोक्ताः कलौ दानं दया दमः ॥ (p. 6.)

Kúrma Puráṇa :— दानधर्मात्परो धर्मो भूतानां नेह विद्यते । तस्माद्विप्राय दातव्यं श्रोत्रियाय द्विजातिभिः ॥ द्विजातिभिरित्युपलक्षणं दानस्य सर्वसाधारणत्वात् ॥ नहि दानात्परतरमन्यदस्तीति मे मतिः । धनधान्यवतः किंचिदहार्यं राजतस्करैः । (p. 6.)

Mahábhárata :—

आयासशतलब्धस्य प्राणेभ्योपि गरीयसः । गतिरेकैव वित्तस्य दानमन्या विपत्तयः ॥ ब्राह्मणायाग्निरूपाय यो दद्यादर्थमर्थिने । निदधाति निधिश्रेष्ठं पारलौकिकमात्मनः ॥ (p. 6.)

Vahnipuráṇa :—

तपःसु चैव तीर्थेषु व्रतेषु नियमेषु च । सम्यक्चीर्णेषु विप्रर्षे पश्चाद्दानं समाचरेत् ॥ यस्य वित्तं न दानाय नोपभोगाय देहिनः । नापि कीर्त्यै न धर्माय तस्य वित्तं निरर्थकम् ॥ तस्माद्वित्तं समासाद्य दैवाद्वा पौरुषादथ । दद्यात्सम्यक् द्विजातिभ्यः कीर्तनानि च कारयेत् ॥ (p. 6.)

On pages 7 to 12 of the same volume, Hemádri cites passages from Vyása, Manu, Vishṇudharma, Yájñavalkya, Devala, Agastya, Śátátapa, and Yama, and also from the Mátsya, Markándeya, Brahma, Skanda Puráṇas, and other texts from the authorities above quoted.

*Dána* (gift) has been mentioned as meritorious even in the Vedic works (see Taittiríya Áraṇyaka, *Prapáṭhaka* X), the last but one Anuváka pp. 887, 888, Cal.; Chhandogya Upanishad[1] and Śatapatha Bráhmaṇa; and also in the Smṛitis.[2] Manu, Paráśara[3] and Brihaspati among the Smṛiti-writers speak of it as particularly efficacious in the present age. But it remained for the Puráṇas to invest it with its present supreme importance in supersession of bodily penance. Kamalákara in his Dána Kamalákara, and Nílakaṇṭha in his Dána Mayúkha while trying to support *Dána* by Vedic citations, give the details of the various *dána* ceremonials as derived from the Puráṇas alone. The Dána-chandriká of Divákarabhaṭṭa is the work most consulted in this part of the country, though the authority of Nílakaṇṭha, Kamalákara and Hemádri is not disregarded. That work too is mainly based on Puráṇas.

### *Division V.*—Śráddhas.

The fifth section of ceremonial observances are the *Śráddhas*. These are divided into two classes—I., *Párvaṇa*, and II., *Ekoddishṭa*.

The first are performed on certain stated occasions, and the number of such Śráddhas is 96.[4]

The practice of performing Śráddhas appears to derive its authority from the Vedas (see Taittiríya Áraṇyaka Prapáṭhaka II. Anuváka X. p. 238, Calcutta edition; Ṛigveda Maṇḍala X. Súkta 15). Whatever is offered in honor of the *pitris* (manes) is considered a *Śráddha* offering provided it is done with *Śráddha* (faith). On this, some of the Śutras have built up portions of the present ceremonial, and the Puráṇas, as the few verses at foot will indicate,[5] have still more enhanced its importance.

[1] The passage runs thus :—दानेन सर्वान्कामानाप्नोति Translation :—By *dána* all objects are attained.

[2] See Manu ch. iv. vv. 227 to 248 ; Yájñavalkya ch. i. vv. 198 to 216, and others in the note at page 120.

[3] See Paráśara Samhita ch. i. v. 23. तपः परं कृतयुगे त्रेतायां ज्ञानमुच्यते । द्वापरे यज्ञमित्याहुर्दानमेकं कलौ युगे ॥

This is quoted by Yájñeśvarabhaṭṭa in his Arya Vidya Sudhákara from Manu (ch. v. 86) see p. 248.

[4] See Nirnayasindhu parichchheda ii. l. 2 p. 2 line 5 ; the Samskáramálá of Gopínáthabhaṭṭa, II. chapter Śráddha Prakaraṇa (MS.); Dharmasindhu parichchheda ii. l. 2 p. 2 l. 5; the Hemádri's Chaturvarga Chintamaṇi, Śráddha Khánḍa MS.

[5] Śráddha Hemádri :—

आह सुमन्तुः ॥ श्राद्धात्परतरं नान्यत् श्रेयस्करमुदाहृतम् । तस्मात्सर्वप्रयत्नेन श्राद्धं कुर्याद्विचक्षणः ॥ ब्रह्मपुराणे ॥ तस्माच्छ्राद्धं नरो भक्त्या शाकैरपि यथाविधि । कुर्वीत श्रद्धया तस्य कुले कश्चिन्न सीदति ॥ नागरखण्डे ॥ लोकान्तरेषु ते तोयं लभन्ते नात्रमेव च । दत्तं न वंशजैर्येषां ते व्यर्था यान्ति दारुणाम् ॥ क्षुत्पिपासासमुद्भूतांस्तस्मात्संतर्पयेत्पितॄन् ॥ कूर्मपुराणे ॥ यो येन विधिना श्राद्धं कुर्याद्वै शान्तमानसः । व्यपेतकल्मषो नित्यं याति नावर्तते पुनः ॥ ब्रह्मपुराणे ॥ एवं सम्यक् गृहस्थेन देवताः पितरस्तथा । संपूज्य हव्यकव्याभ्यामन्नेनातिथिबान्धवान् ॥ विष्णुपुराणे ॥ ब्रह्मेन्द्ररुद्रनासत्यसूर्याग्निवसुमारुतान् । विश्वान् देवान् पितृगणान् वयांसि महितान्पशून् ॥ सरीसृपान् पितृगणान् यच्चान्यद्भूतसंज्ञितम् । श्राद्धं श्रद्धान्वितः कुर्वन्प्रीणयत्यखिलं जगत् ॥ (MS.)

The verses which are invariably now recited at each Śráddha, whether monthly, annual or special, are from the Harivamśa,[1] and no *Śráddha* is considered complete without them. Paṇḍit Táránátha Tarka-Váchaspati of Calcutta has collected in his Gayá-Śráddha Paddhati (Calcutta, 1872) a good deal of the procedure usually observed at that shrine. But, it may be observed, that the ceremonial which evidently began in Vedic times is now overfull of Puráṇic passages which are considered necessary for its performance.

Besides the above *Śráddhas*, there are other *Śráddhas* performed on special occasions, such as Vratas, Śántis, marriages, and all other auspicious occasions. These are known as *Nándí Śráddhas*, for which there seems to be no place in the ancient ceremonials, but they are evidently a modern institution for the propitiation of the manes. These are performed not only by persons who have lost their parents, but by all who have to perform certain auspicious ceremonies, and have lost some one of the three elders, viz., the father, mother, and the mother's father. All the above are *Párvaṇa Śráddhas*.

The second kind of Śráddha is Ekoddishṭa, so called because it is performed for the propitiation of the manes of one person instead of three. All the *Śráddhas* up to the twelfth day after death are *Ekoddishṭa*, and after the *sapiṇḍana* is performed on the twelfth day there are some Śráddhas which are *Ekoddishṭa*, and others which are not so. The principal *Śráddhas* of this class are 25 in number.

The Śráddhas that have been ordained to be performed at all the *Tirthas* (or sacred places), whenever they happen to be visited, are mixed and belong to both kinds.[2]

The order in which persons are authorized to perform Śráddhas in honor of the deceased is given in the Nirṇayaśindhu *parichchheda iii.* Śráddha Prakaraṇa, l. 5, pp. 1 and 2, from which a few important extracts are given below :—

चन्द्रिकायां सुमन्तुः ॥ मातुः पितुः प्रकुर्वीत संस्थितस्यौरसः सुतः । पैतृमेधिकसंस्कारं मन्त्रपूर्वकमाहृतः ॥ तत्रैव हेमाद्रौ शङ्खः । पितुः पुत्रेण कर्तव्या पिण्डदानोदकक्रिया । पुत्राभावे तु पत्नी स्यात्तदभावे तु सोदरः ॥ स्मृतिसंग्रहे ॥ पुत्रः पौत्रश्च तत्पुत्रः पुत्रिकापुत्र एव च । पत्नी भ्राता च तज्जश्च पिता माता स्नुषा तथा ॥ भगिनी भागिनेयश्च सपिण्डः सोदकस्तथा । असन्निधाने पूर्वेषामुत्तरे पिण्डदाः स्मृताः ॥ विष्णुपुराणे ॥ पुत्रः पौत्रो वा भ्राता वा भ्रातृसन्ततिः ॥ सपिण्डसन्ततेर्वापि क्रियार्हो नृप जायते ॥ तेषामभावे सर्वेषां समानोदकसंततिः । मातृपक्षसपिण्डेन संबन्धो यो जलेन वा ॥ कुलद्वयेपि चोच्छिन्ने स्त्रीभिः कार्या क्रिया नृप । तत्संघातगतैर्वापि तद्विकथात्कारयेन्नृप इति ॥

[1] The verses run as follows :—

सप्त व्याधा दशार्णेषु मृगाः कालञ्जरे गिरौ । चक्रवाकाः शरद्वीपे हंसाः सरसि मानसे ॥ १ ॥
तेपि जाताः कुरुक्षेत्रे ब्राह्मणा वेदपारगाः । प्रस्थिता दीर्घमध्वानं यूयं किमवसीदथ ॥ २ ॥

Harivamśa : leaf 28, p. 2.

These verses only allude to the story of the seven *Vyádha* (hunters), which is narrated before in chapters xxi. to xxiv. at full length.

[2] See Nirṇyasindhu parichchheda iii. Śráddha Prakaraṇa, l. 2 p. 1.

In the above remarks, the number of the Śráddhas that ought to be performed, and the authorities on which they are based, have been given. Those who examine the daily life of the Hindus will find that, except the anniversary Śráddha, the annual *Mahálaya* Śráddha performed in the dark half of the lunar month of Bhádrapada and the three Śráddhas performed at Prayága (Allahabad), Benares and Gayá, by those who perform the great threefold pilgrimage, all the other Śráddhas are gradually getting out of use. Even the Nándi Śráddhas, which are performed on auspicious occasions, have been very much abbreviated, and are now reduced to ten mere pecuniary donations, two of which have been lately added in honor of certain deities by local usage. I must here take occasion to correct a wrong notion which has lately been adopted by some authorities that a pilgrimage to Benares is an unnecessary expenditure according to Hindu law. Looking to the cases that are now available on this subject, it appears to me that there are no authorities cited therein which any educated Hindu, versed in the subject, would hold to be worth considering. A visit to Benares by itself is an essential duty of every orthodox Hindu.[1]

A person who is unable to perform *Śráddha* in the ordinary mode, may adopt one of the following alternatives. Thus, he may perform one of the following :—

(1.) A representation of *Kuśa* grass may be taken instead of a Bráhmaṇa;

(2.) A *Homa* (sacrifice) may be made in the name of the *Pitris*;

(3.) *Piṇḍa* of cooked food only may be offered;

(4.) *Áma-Śráddha* may be performed by gift of uncooked food;

(5.) *Hiraṇya-Śráddha* may be performed by a small money present;

(6.) *Piṇḍa* of wild roots, &c. may be offered;

(7.) The whole *Sankalpa* (determination) may be made and the *Prayoga* (ceremonial) recited;

(8.) *Tarpaṇa* (offerings of water) may be made with *Tila* and *Kusa* grass;

(9.) Grass may be given to cows;

(10.) A small quantity of grass may be burnt, and a small quantity of *Tila* with a small sum of money may be given ;[2]

---

[1] Matsya Puraṇa, vol. II. pp. 616—672; Agni Puráṇa, vol. I. pp. 373, 377—384; Madana Párijáta, Tírtha-pratyámnáya Prakaraṇam, see chiefly leaves 257 and 258 (MS.); also Kási Khaṇḍa (MS.); also Tristhalí Setu of Náráyaṇabhaṭṭa, (MS.) and other works.

[2] On this subject, see Nirṇayasindhu, Śráddha Parichchheda, leaf 47, p. 2; Dharmasindhu, 3rd Parichchheda, 2nd half, l. 30; see also Śráddha Mayúkha MS.; all these derive their authority from the Śráddha Hemádri, which exhausts all the authorities on the subject (see MS.)

(11.) In the absence of the above means he should repair to an unfrequented spot in a forest, raise his arms, and cry to the manes, saying—"I have neither money, nor wealth, nor anything fit for a *Śráddha*. I am submissive to my *Pitris*. May the *Pitris* (manes of ancestors) be satisfied with my faith. I have raised these hands in the road of the winds."

*Division VI.*—PRÁYASCHITTAS.

As regards the Práyaschittas I would observe that most of the penances as they obtain at the present day have no place in the ancient authorities. The earliest Vedic penances appear to be recitations of Vedic mantras, sacrifices to the sacred fires, and certain *japa* (silent repeating of prayers).[1]

It is on the principle of these penances that the sacrifice performed before the admission of a twice-born into the order of *samnyásins* is based; and the *mantras* repeated on this occasion are drawn from the Taittiríya Áraṇyaka (p. 872 Calcutta edition). This idea seems to have been departed from in the Smṛiti period, and all manner of penances have been laid down by Manu or rather Manu as now received. Coming to the times of Yájñavalkya, the penances as laid down by him may be thus summarized :—

I. Sacrificial offerings—
   (*a*) The Aśvamedha sacrifice, III, 244.
   (*b*) The Vaiśvánarí Ishṭi, III, 250.
II. Recitation of the Veda thrice over, III, 249.
III. Corporal.
   (*a*) Emaciation—
      (1) Feeding on a limited quantity of alms for twelve years, III, 243.
      (2) Feeding on oilcake or bits of grain at night during three years, III, 254.
      (3) Prájápatya Kṛichchhra, III, 260.
      (4) Chándráyaṇa, III, 260.
      (5) Paráka, III, 265.
      (6) Kṛichchhra, Atikṛichchhra, III, 264.
      (7) Pádika Kṛichchhra, III, 270.

[1] (*a*) See the *parišishṭa* to the *Pavamána mantras* of the Ṛig-veda ending with *Maṇḍala IX*, *súkta* 67. It ought to appear at the top of p. 167 of vol. V. of Prof. Max Müller's edition, but that work does not give the *parišishṭas* which are received and recited as part of the Ṛig-veda by every student of that Veda.

(*b*) Áitareya Bráhmaṇa, Pañchiká VII. Adhyáya II. See Dr. Haug's translation of the same, vol. II. pp. 443 to 460.

(*c*) Áśvaláyana Gṛihya Sútra pp. 173 to 178, Calcutta edition.

(*d*) Ápastamba Kalpasútra of the Black Yajurveda, ch. ix.

(*e*) Taittíríya Áraṇyaka, p. 867, Cal. ed.

(8) Krichchhrátikrichchhra, III, 293.

(*b*) Annihilation—

(1) Death by mutilation, III, 233.

(2) Death on a battle-field, III, 248.

(3) Death by drinking hot liquids, III, 253.

IV. Protection at one's risk—

(*a*) Of a Bráhmaṇa, III, 244.

(*b*) Of twelve cows, III, 244.

V. Gifts—

(*a*) Of a cow, eleven cows and a bull, III, 263, 264.

(*b*) Of wealth (III, 250) and of one's weight in gold, III, 258.

A glance at the above list will suffice to show that all of them have been superseded by custom. Moreover, if one looks to the offences described by Yájñavalkya and other Smṛitis, and some of which were once considered so impure as to degrade their authors to the servile class, he will see a vast change in practice. Thus, what was once held to be a cause of degradation is often now performed as a matter of course. Thus the selling of milk and *ghee*, whey and curds, is distinctly one of the noted degrading causes,[1] and yet hundreds of shops throughout the city of Bombay itself are now owned exclusively by Bráhmaṇas, who are still full members of the brotherhood. Indeed it has become a sort of special calling for the poorer Bráhmaṇa class, and people will rather resort to the shop of a Bráhmaṇa milkseller than to one of another class, if the former be available. I regret to add that in some places, even in the Mofussil, contracts for selling spirits have been entered into by Bráhmaṇas, and I have known of instances of such persons sitting in shops to keep accounts; whilst their Śúdra servants were vending the *firewater*. Surely according to Hindu notions, one can conceive nothing more degrading than such an occupation. But such is the force of tyrant custom, that these people have remained members of their community; and with the advance of the railways and the spread of Western civilization among the higher classes, I can hardly conceive the limits to which this practice is likely to be carried on. A cursory perusal of the third chapter of Yájñavalkya will convince the reader who has the slightest knowledge of Hindu society as it exists, that Yájñavalkya's penances are now merely nominal caricatures of an ideal society which probably had no existence at any period beyond the mind of the writer of that digest; but which is certainly entirely inapplicable to the Áryan society as it exists at the present day. The sale of salt is now carried on by the highest class of *Bráhmaṇas*, whereas according to Yájñavalkya

[1] Yájñavalkya, ch. iii v. 40, see Part II. p. 248.

and other Smṛitis, such a vendor ought to lose his caste and be turned out of the community (Yáj. chap. iii, 40).

Even courts of law have had to divide the profits of such immoral trades conducted by Bráhmaṇas. The earliest instance I can lay my hands on is the case of *Jye Narain Mookerjee* v. *Bul Ram Rai*.[1] The Judges before deciding it put the following question to the *Paṇḍits* :— "If two Bráhmins engage in a partnership in trading in wine, is this species of trade correct or not according to the *Shasters* current in Bengal and Hindustan? And if it be improper, can one partner sue the other for a share of the profits?" The Paṇḍits gave the following answer: "According to the *Shasters*, it is not proper for Bráhmins to trade in wine. If, however, two Bráhmins have acquired wealth by matters prohibited by the *Shaster*, the share of each in the said wealth is equal." A decree was accordingly passed by the court ordering the sharing of gains made by trafficking, which had been prohibited by the Vedas, Smṛitis, and Puráṇas.

Almost all, if not all, the above offences are now expiated by giving *Dána*. On this point, Parásara's views are most prevalent. That sage, as we know, was one of the last *rishis* or seers amongst a long line of Hindu law-givers; and looking to the present aspect of affairs, one is almost inclined to take his exposition of the law as prophetic. For expiation of almost all offences is, according to him, confined to the different kinds of *dána* (gift) not only to Bráhmaṇas, but even to cows.

Two more sources of the written Dharmaśástra have still to be mentioned, as they largely affect the present *áchára* (practice) of the people. The first of these are the Tantras. Smṛitis themselves are sometimes called Tantras.[2] The Tantras as they are denominated by modern writers, are a distinct class of ancient works, which play a very important part in the popular worship and ceremonial of the Áryans. Into their antiquity and history I do not now propose to enter. Their authority is recognised by the people, and some of them have been already noted in the previous portions of this Introduction. Kamalákara tries to make out that the Tantras are only to be recognised so far as they are not opposed; but he does not say to what. And he is obliged to incorporate them into his digest because they are observed by the people.[3] The number of Tantras is very great. Mr. Colebrooke enumerates[4] only twenty-six. Many of these are not very widely known. Many are devoted to the worship of Devi; but there are also

[1] Calcutta S. D. Rep., IV, 84.

[2] See Bṛihaspati cited by the Víramitrodaya, l. 195, p. 2 line 4; Vṛiddha-Śátátápa's first verse runs thus: बृद्धशातातपप्रोक्तं स्मृतितंत्रं विनिश्चितं ॥ संक्षेपेण प्रवक्ष्यामि यावदर्थोपलब्धये ॥

[3] Nirṇayasindhu, Parichchheda 2nd, leaf 38, p. 1, lines 5—7.

[4] Life and Essays of H. T. Colebrooke, vol. III. p. 165.

*tantras* devoted to the worship of Śiva, Vishṇu, and other deities. The different Yámalas, the Damara, Meru, and Śaradá Tilaka are largely used. The *Tantra Sára* of Maha-Mahopádhyáya Krishṇánanda Vágiśabhaṭṭáchárya gives a list of 67.[1] The Agni Puráṇa treats of the Tantra worship in its various aspects.[2] The old catalogue of the Bengal Asiatic Society published in 1838 gives a list of 114 Tantra works, and Dr. Rájendrálál Mitra's valuable volumes supply a larger number. The people consider this department of literature as peculiarly sacred, and in the case of some private collections, lists of Tantras are not supplied to strangers. This is however a large and yet comparatively unexplored field, which must be further looked into.

Another source of the Dharmaśástra are the Pancharátras, which the Víramitrodaya in the Áchárádhyáya mentions as equal to the Smritis.[3] The ceremonial of the Pancharátras is largely followed by the people, particularly by the Vishṇava communities in various parts of India.

[1] Tantras named in Tantrasára:—

1. Sárasangrahah.
2. Yoginítantram.
3. Gaṇeshavimarśiní.
4. Siddhayámalam.
5. Matsya Súktam.
6. Tárávilásah.
7. Váráhítantram.
8. Rámárchana Chándriká.
9. Pingalátantram.
10. Viśva-Sárah.
11. Muṇḍamálátantram.
12. Rudrayámalam.
13. Gautamíyam.
14. Bṛihatgautamíyen.
15. Tantrarájah.
16. Yoginíhṛidayam.
17. Agastisanhitá.
18. Kulárṇavah.
19. Viśuddheśvartantram.
20. Náráyankalpah.
21. Śáradátílakah.
22. Kulávalí.
23. Yámalah.
24. Díkshánibandhah.
25. Bhávapradípah.
26. Kálachúḍámaṇih.
27. Nandikeśvarasanhitá.
28. Jñánárṇavah.
29. Tripurá sára-Samuchchayah.
30. Nibandhah.
31. Kalpah.
32. Náráyaṇatantram.
33. Mantradevaprakáśiká.
34. Prapancha-Sárah.
35. Dakshiṇa-Múrti-Saṇhita.
36. Siddhayámalah.
37. Bhútabhairavam.
38. Sachchandabhairavam.
39. Bhairavítantram.
40. Kálítantram.
41. Víratantram.
42. Kumárítantram.
43. Chámuṇḍatantram.
44. Nílatantram.
45. Phetkáríyatantram.
46. Bhairavatantram.
47. Uttaratantram.
48. Svatantratantram.
49. Somabhujangavallí.
50. Somabhujangáraṇi.
51. Śrivikrama.
52. Śivágama.
53. Samayáchára.
54. Brahmha-Sanhita.
55. Kalávaliyam.
56. Devíyámalah.
57. Bhútaḍamaram.
58. Svayambhuvamatra Kátantram.
59. Bhávachúḍámaṇih.
60. Bráhmha-Saṇhíta.
61. Siddhu Sarsvatam.
62. Navarátra Śvarah.
63. Ekavirakalpah.
64. Kumárikalpah.
65. Tárárṇavah.
66. Kalikramah
67. Bhutáḍámaran.

[2] Agni Puráṇa, see vol. I. chapters 22 to 39, and vol. II. pp. 277—281, pp. 102—105 of the same volume; Cal. ed.

[3] See Agni Puráṇa vol. I., chapter 39, pp. 114—116 Cal. ed. Narada Pancharatra, Cal. ed. 1865.

The next source of Dharmaśástra which I have now to consider is that of usage or custom. In regard to this branch of law, I am inclined to hold that this has always been the main source of the Áryan law from the earliest times; and that our Smṛitis and Puráṇas, so far as they relate to the Dharmaśástra, have been merely the records of customs that existed in those days. Thus, as the different Smṛitis were compiled, they served merely to record the changes in the customs of the people that took place from time to time; and where the ideas of the people were even then not definite, the compilers and treatise-writers had to leave the subjects unprovided for.

The series of Smṛitis appears to end with Parásara, who has happily for India had the good fortune of having a commentator of such eminent sanctity and learning as Mádhava. Writers subsequent to the Smṛiti and Sútra makers are not styled *ṛishis*. Their peculiar title is that of Bháshyakáras or Tikákáras (commentators) or Nibandhakáras (treatise writers). As such, their authority as the declarers of the law for the period for which they wrote has been generally accepted, and, in the nature of things, it was right that it should be so. Because, although it is often the fashion to consider society in India as stationary, in point of fact it never has been so. There is no doubt that during countless revolutions, the religious skeleton has remained the same. Notwithstanding the layer upon layer of worldly varnish that has been applied to the Áryan character in India, there is still a strong ancient spiritual element at the core. The descendants of the Áryans who worshipped the *Śvetadvípa* (white-island) as the residence of the devotees of Vishṇu at the time of the Rámáyaṇa, or of their successors who sacrificed in the Naimísha forest on the banks of the Yamuná; or, if we rise yet higher, of those who, by their morning *Saura* hymns, propitiated *Savitá* (the Supreme Being) as the eternal representative of the Universal Spirit, still remain, preserving, as far as they can, the traditions of their gods and of their race. An example of this conservatism is to be found in one of the simplest of Vedic observances. In reading the Ṛig-Veda, certain *Ṛichs*[1] of the third *Maṇḍala*, wherein Vásishṭha was cursed by Viśvámitra, are considered as improper for the *Vásishṭhas* to hear. Accordingly they are still avoided by those who bear the generic name of *Vásishṭha*. These Bráhmaṇas will leave the place while that portion of the Veda is being chanted. While so strict in keeping up such comparatively unimportant observances, they are utterly regardless of others much more weighty; and where the daily concerns of life have necessitated changes, they have been freely made, sometimes on the basis of old practices, at other times by their analogy near or remote, and on some occasions in entire

[1] *Ashṭaka* iii, *Adhyáya* iii, *Varga* 23, (Max Müller's ed. vol. II. pp. 935—939).

opposition to the old usages. All the changes that have been thus worked out, are founded on custom.

This pre-eminence of custom and usage is founded on the highest authorities. Some of these are noted in the Appendices. I shall now add a few more to show that custom, as such, is held to be law. The Mahábháratta has been already cited. Other passages from the same great work support the above proposition :—

*Vanaparva, Adhyáya* 150 v. 28 (leaf 150, p. 1) :—

आचारसंभवो धर्मो धर्मे वेदाः प्रतिष्ठिताः ॥ वेदैर्यज्ञाः समुत्पन्ना यज्ञैर्देवाः प्रतिष्ठिताः ॥ २८ ॥

Translation : *Dharma* is derived from *áchára* (practice or usage), &c. c

Again, further on in the same *parva,* we have the following reply of king Dharmarája to the god of justice :—

महाभारत वनपर्व अ० ३१३ श्लो० ११७, प० ३०९, पृ० २

तर्को ऽप्रतिष्ठः श्रुतयो विभिन्ना नैको ऋषिर्यस्य मतं प्रमाणम् ॥
धर्मस्य तत्त्वं निहितं गुहायां महाजनो येन गतः स पंथाः ॥ १७ ॥

Translation :—Reasoning is uncertain. The *Śrutis* are conflicting. There is not a single sage whose doctrine is an [unimpeachable] authority. The essence of *Dharma* is placed in a cave [*i. e.* is inaccessible]. That path is the [proper] one by which great men have gone.

Comment by Nílakaṇṭha :— तर्क इति अप्रतिष्ठः निर्णयशून्यः श्रुतयोपि विभिन्नाः परस्परविरुद्धार्थवादिन्यः मुनयोपि तद्व्याख्यातारस्तादृशा एव अतोनंतासु धर्मशास्त्रादिविद्यासु श्रममकृत्वा बहुजनसंमतमेव मार्गमनुसरेदित्यर्थः ॥ १७ ॥

Translation :—*Tarka,* &c. [is] not conclusive. The *Śrutis* also are *Vibhinnáh, i. e.* promulgate doctrines opposed to each other's. The sages also, who are their commentators, are of the same type. Therefore without making any effort (to be versed) in the innumerable branches of learning, such as the *Dharmaśástra,* and others, one should follow that path only which is approved of by the majority of the people.

Manu's code lays down usage as one of the sources of law.[1] The customs of districts, tribes and families are directed to be observed. "The way of the good by which a man's parents and grandparents have gone, should be trodden by him ; so that he will not be harmed." The king is to decide according to the customs of countries, castes, and families.[2]

Yájñavalkya himself advises to the same effect.[3]

Vijñáneśvara, in discussing the question whether vv. 118 and 119 ch. ii. Yáj. contain a new commandment or the recital of an existing custom, holds that it is a new one, and he assigns the following reason for his decision :— लोकसिद्धस्यानुवादकान्येव प्रायेणास्मिन्प्रकरणे वचनानि ॥

Translation :—The texts in this Section [*i. e.* the one on succession and partition] are mostly recitals of what [actually] prevails in the world [see Mit. ch. ii. l. 50 p. 1; Stokes' H. L. B. p. 387 ll. 26—28].

[1] See Manu I., 108—110, 118 ; II., 6, 12, 18 ; IV., 155—158, 178 ; VIII., 3, 41.

[2] Manu, VIII., 3, see Kullúka's Comments, l. 122, p. 2.

[3] See above ch. i. v. 7 (p. 159) ; ch. i. vv. 341, 342 (p. 198) ; ch. i. vv. 360, 361 (p. 200) ; ch. ii. v. 5 (p. 201) ; ch. ii. v. 186 (p. 230).

The Víramitrodaya in his disquisition on the temporal nature of proprietary right says that even vv. 135, 136, ch. ii. Yáj. do nothing more than embody the existing custom in respect to succession. In support of the above, Mitra Miśra says :— प्रायेण व्यवहारस्मृतीनां लोकसिद्धार्थानुवादकत्वमिति सकलनिबन्धृभिरभिधानात् ॥ Translation :—For all treatise-writers consider Smṛitis on Vyavahára (civil law) as [simply] reciting customs recognised by the people. [See Vír. l. 164 p. 1. l. 11.][1]

Nílakaṇṭha in the Vyavahára Mayúkha proposes the same view ; and he compares "civil law" to grammar as being based on usage.[2]

Adherence to the customs observed by one's forefathers is enjoined in the Ṛig-veda.[3]

Bṛihaspati mentions popular customs as one of the sources of substantive law in the following text :—देशस्थित्यानुमानेन नैगमानुमतेन च। क्रियते निर्णयस्तत्र व्यवहारस्तु कथ्यते ॥ Translation :—"Where the decision is given in accordance with the customs of the country, reasoning, and the counsel of the Naígamas (the lay public), it is called *Vyavahára* (civil law).

This mode of decision is called *charitrá* (usage) which the same sage thus defines :—यद्यदाचर्यते येन धर्म्यं वाऽधर्म्यमेव वा। देशस्याचरणं नित्यं चरित्रं तद्धि कीर्तितम्. Translation :—"Whatever is practised by one, whether proper or improper, is termed *charitrá* [if it is consonant to] the usual custom of the country."[4] It will appear from this text that our indigenous law does not support the English law in respect to custom, that it must be of a certain kind before it can be upheld. I must take occasion here to remark that it is wrong in my opinion to apply English rules of custom to the determination of our native usages.

An *achárá* (usage) accepted by a community becomes *dharma* (law). Yájñavalkya says (chap. i. 156) that even *dharma* itself, if opposed to the usages and wishes of the people, is not to be practised. The ordinary digests teem with examples where even religious ceremonial in many branches has been thus modified. One example will suffice to show how far usage can go in this direction. It is the festival of the *Holí*, with which all are quite familiar. The passage is from the Vratarája : leaf 246, p. 1 :—

"पूजामंत्रस्तु असृक्पाभयसंत्रस्तैः कृता त्वं होलि बालिशैः। अतस्त्वां पूजयिष्यामि भूते भूतिप्रदा भव ॥ इति होलिकानिर्णयः।

Translation :—The worship-hymn is—Thou art made by fools distressed by the fear of *Asriki* (a demon). Therefore I shall worship thee. Oh spirit, give us prosperity."

This applies to the whole of India, without any exception. The Holí

[1] Compare Mit. ch. ii. l. 47 p. 1 ll. 3, 4 ; and its translation ; Stokes' H. L. B. pp. 371, 372 (ch. i. sec. 1 para. 14.)

[2] See below p. 85, lines 18—22.

[3] See Maṇḍala VIII., 30, 3 pp. 422 and 423 below, where the passage is translated, and the remarks of the Samskárakaustubha thereon given at p. 423 ll. 7—11.

[4] See these texts cited by Mádhava in the opening part of his Vyavahára Mádhava (MS.)

may not be moral and legal from the Christian point of view; but it is moral and legal from the Hindu stand-point.

The Smṛiti-Ratnákara of Venkanáth quotes the following passage (from the Mahábhárata ?) in support of family usage superseding express texts :—

यत्र शास्त्रगतिर्भिन्ना सर्वकर्मसु भारत । उदितेऽनुदिते चैव होमे भेदो यथा भवेत् ॥ तस्मात्कुलक्रमायातमाचारं त्वाचरेद्बुधः । स गरीयान्महाबाहो सर्वशास्त्रोदितादपि ॥

Translation :—Oh Bhárata, since the precepts of Śástras are conflicting in respect of all rites, as for instance a sacrifice is ordained [by some] after sunrise, and [by others] before sunrise, a wise man should follow the hereditary observances of his family. Oh! *Mahábáho* (one with a powerful arm !) such usage is superior to the commandments of all the Śástras together.

Again, in support of the usage of the country, Devala is thus cited by the same authority :—आदौ तावद्देशधर्मो विचिन्त्यो देशे देशे या स्थितिः सैव कार्या । लोकद्विष्टं पण्डिता वर्जयन्ति दैवज्ञो ऽतो लोकमार्गेण यायात् ॥ येषु देशेषु ये देवा येषु देशेषु ये द्विजाः । येषु देशेषु यच्छौचं याश्च यत्रत्यमृत्तिकाः ॥ येषु देशेषु यत्तोयं धर्माचारश्च यादृशः । तत्र तान्नावमन्येत धर्मैस्तत्रैव तादृशः ॥

Translation :—The usage of the country should first be attended to; that which is observed in the country should alone be observed. Wise men abstain from what is hated by the people; a wise man should go by the path of the people [*i. e.* follow popular usage]. The deities, the Bráhmaṇas, the [notions of] purity, the [kinds of] earth, the water, and the religious observances of a country should not be ridiculed in that country; for that is the law of that country.

What constitutes *sadáchára* (usage) is mentioned both by Manu and Yájñavalkya among the sources of law, and the definition given thereof by the Chaturvimśatimata runs as follows :—

यस्मिन्देशे य आचारः पारम्पर्यक्रमागतः । वर्णानां किल सर्वेषां स सदाचार उच्यते ॥

Translation :—That usage which has prevailed in a country through several generations in all classes is termed *Sadáchára* (usage of the learned).

---

## Manu.

In Appendix II., all the Smṛitis mentioned in Yájñavalkya (I. 4—5), with the exception of Manu and Yájñavalkya, have been noticed. On these last two, I have now to offer a few brief remarks. Manu is the oldest lawgiver of the Indian Áryas.[1] His mention by the Śruti is evidence of his antiquity. From the Vedas down to the Puráṇas, Manu and his Dharmaśástra are always appealed to as the chief

[1] Manu II. 7. See Kullúka's Comments, l. 14 p. 2; Paráśara Mádhava, chap. i. v. 2 (MS.) The Veda itself attests to the pre-eminence of Manu. यद्वै किञ्चन मनुरवदत्तद्भेषजं : Translation :— 'Whatever Manu says is medicine.' Angirá (cited by Nílakaṇṭha in the Saṁskara Mayúkha)—मन्वर्थविपरीता तु या स्मृतिः सा विनश्यति—Translation :—That Smṛiti which is opposed to the sense of Manu, is extinguished.

guides. Parásara (*Laghu, Adhyáya* I., vv. 23, 24, Cal. ed., p. 3, vol. II.) says distinctly :—

कृते तु मानवा धर्मास्त्रेतायां गौतमाः स्मृताः ॥ द्वापरे शाङ्खलिखिताः कलौ पाराशराः स्मृताः ॥

Translation : In the *Kṛita* [age] the Mánava-dharma ; in the *Treta*, those remembered by Gautama ; in the *Dvápara*, those by Śaṅkha and Likhita ; and in the *Kali* [age], those remembered by Parásara.

There have been various Manus. Some have been *ṛishis*, and others kings. The kings are 14 in number, each presiding over a cycle called Manavantara. The great Ṛishi Manu appears to be one of the family of Viśvámitra (Samskárakaustubha, l. 189, p. 2 and l. 195, p. 102). One of the Gotras of the Kshatriyas is that of Mánava. (Áśvaláyana Srauta Sútra, second half, 6, 15, 5, p. 885,[1] Cal. ed.) Mánava appears as a sub-branch of the Maitráyaṇí Sákhá of the Black Yajur Veda. But there is little to connect the present Manu Smṛiti by Bhṛigu with the old Mánava Dharmaśástra. The copy of Manu now published with Kullúka's comments is itself imperfect. More manuscripts belonging to different families must be collected ; and the work examined with the help of other *Nibandhas*. Having read over a large portion of the Mahábhárata, particularly the Vana, Śánti, and Ánuśásanika *parvas*, I am inclined to hold that all the *Smṛitis* have drawn more or less upon this great storehouse of Áryan learning and history, and Bhṛigu amongst the rest in compiling the present Manu Samhitá.

From the following verse from the *Skanda Puráṇa*, it will appear that four of the standard Smṛiti writers have drawn on the traditions of Svávambhuva Manu in compiling their codes :—

"भार्गवी नारदीया च बार्हस्पत्याङ्गिरस्यपि । स्वायम्भुवस्य शास्त्रस्य चतस्रः संहिता मताः ॥

Translation :—There are four acknowledged versions of the law or Svávambhuva Manu, viz., those of Bhṛigu, Nárada, Bṛihaspati, and Aṅgiras.

How far Yájñavalkya has drawn upon Manu may be seen to a certain extent from the footnotes to the translation in Part II. There are various commentaries on Manu, namely, by—(1) Bháruchi, (2) Viśvarúpa, (3) Dharaṇídhara, (4) Govindṛája, (5) Sarvajñanáráyaṇa, (6) Medhátithí, (7) Mádhava, and (8) Kullúka ; and it would be a valuable contribution to Indian History to examine all these, and to edit the Manu Smṛiti, and explain its bearings as far as possible historically on the progress of Indian society. There are two other works known by the name of Manu, namely, Bṛihat-Manu, and Vṛiddha-Manu.

[1] Gurucharitra, Adhyáya 26 ; also see Professor M. Müller's Hist. of Anc. Sansk. Lit. p. 370. While these pages were passing through the press, I received, from one of my friends in Khándesh, a few Sútra works used by the Maitráyaṇi Bháhmaṇas in those parts. They are :—(1) Mánava-Gṛihya-Purusha-Sútra : it consists of 2 Adhyáyas, the first containing 23 Khaṇḍas, and the second, 18 Khaṇḍas ; (2) Váráha-Srauta-Sútra, 14 Adhyáyas including *chayana*, Vajapeya, Rajasúya, and Aśvamedha, and Váráha-Smarta-Sútra, 15 Adhyáyas and 5 other Sections ; (3) another Váraha-Gṛihya-Sútra ; only 16 Khaṇṇas are available and in use.

## YÁJNAVALKYA.

I now pass on to Yájñavalkya. There appear to be four versions under the names of Yájñavalkya, Yoga-Yájñavalkya, Vṛiddha-Yájñavalkya and Bṛihat-Yájñavalkya. Out of these, I propose to make a few notes on the first. This is edited by me in Part I., and translated in Part II. For the purposes of settling the text the following editions have been used[1]:—

1. A lithographed edition by Shrídhar Lálji in the Jñána Saṅgraha Press, Bombay, Śaka year 1785.

2. Do. do. by Bápu Śeṭa Hegishṭé in his own press, do. do.

3. A quarto edition printed at Calcutta in 1813 A. C.

4. A manuscript belonging to Rájárám Shástrí Bodas, of the Elphinstone College, written in the hand of his grandfather.

5. Dr. Stenzler's edition printed at Breslau in 1849 A. C.

The following verses have been attributed by *Nílakaṇṭha* in his several Mayúkas to Yájñavalkya. But they are not found in any of the above copies.

[In the Sanskára Mayúkha—]

स्वागतं चार्थिभिर्दृष्ट्वा नाधीयीतैव बुद्धिमान् ॥ अप्यनुज्ञापिते तस्मिन्नाध्येतव्यं कथंचन ॥ नाधीयीत श्मशानान्ते ग्रामान्ते गोव्रजेपि वा ॥ वासित्वा मैथुनं वासः श्राद्धिकं प्रतिगृह्य च ॥ न विवादे न कलहे न सेनायां न सङ्गरे ॥ न भुक्तमात्रे नार्जीर्णे न वमित्वा न भुक्तके ॥ अ. १ श्लो. ४९

ग्रहणोद्वाहसंक्रान्तियात्रार्तिप्रसवेषु च ॥ स्नानं नैमित्तिकं ज्ञेयं रात्रावपि न सेव्यते ॥

[In the Shráddha-Mayúkha—]

श्वानृप्तेस्तु पवित्राणि जप्त्वा पूर्वं जपं तथेति ॥४३।११

यस्य संवत्सरादर्वाक् सपिंडीकरणं भवेत् ॥ तस्याप्यन्नं सोदकुंभं दद्यात्संवत्सरं द्विजः ॥ ७१।८

---

[1] I have carefully compared my edition with the Calcutta one, and the following is the result:—

Ch. I.—The number of verses here is 368, while in my edition it is 367½. This difference is due to there being one additional verse in the Calcutta edition, viz., the 246th, and verse 232 being made up of three hemistichs. In regard to the additional verse (246th) it may be noted that it was not found in any of the four copies that I consulted; and a reference to Vijñáneśvara's gloss, where this is not commented on, leads me to think that Vij. did not accept this as a verse of Yáj. The last words of Vij. in his comment on v. 245 according to the Calcutta edition, says: जपेदित्यन्वयः If v. 246 had been commented on by Vij., this gloss should have occurred at the end of that verse.

Ch. II.—The Calcutta edition has three additional verses as compared with my edition, viz., the 30th, 71st and 122nd. The first is attributed to Nárada by Nílakaṇṭha (see Part I. p. 2 line 29 with note), and the second also to Nárada by the Vír. (see l. 47 p. 2). So is the third by Aparárka (see ch. ii. l. 41 p. 1 line 1 in my MS. copy).

Ch. III.—The Calcutta edition has one verse less than my edition, because after verse 284 it omits one beginning with मिथ्या which is commented on by Vij.

[In the Dána-Mayúkha—]

यदि वाग्यमलोपः स्याज्जपादिषु कथंचन । व्याहरेद्वैष्णवं मंत्रं स्मरेद्वा विष्णुमव्ययं ॥ रौद्रं पित्रासुरान् मंत्रांस्तथा वैवाभिचारिकान् ॥ व्याहृत्यालभ्य चात्मानमपः स्पृष्ट्वान्यदाचरेत् ॥ आर्षं छंदश्च दैवत्यं विनियोगं तथैव च ॥ वेदितव्यं प्रयत्नेन ब्राह्मणं च विशेषतः ॥

[In the Práyaschitta-Mayúkha—]

औषधं स्नेहमाहारं ददद्दोर्ब्राह्मणे द्विजः ॥ दीयमाने विपत्तिः स्यान्न स पापेन लिप्यते ॥ तथा ॥ दाहछेदशिराभेदप्रयोगैरुपकुर्वतां ॥ द्विजानां गोहितार्थं तु प्रायश्चित्तं न विद्यते ॥ यतिश्च ब्रह्मचारी च पक्वान्नस्यागिनावुभौ ॥ तयोरन्नं न भोक्तव्यं भुक्त्वा चान्द्रायणं चरेत् ॥ चाण्डालपुल्कसम्लेच्छभिल्लपारसिकादिकान् ॥ महापातकिनः स्पृष्ट्वा द्विजः स्नायात्सचैलकः ॥

Either Nílakaṇṭha found more copious and correct MSS. of Yájñavalkya than have been available to his successors; or the verses may exist in one of the other three versions above alluded to. This is a point to be cleared up by further investigation.

The reasons which induced me to select Yájñavalkya from amongst the other Smritis for translation were two:—*First*, that it contained the origin of the celebrated commentary of Vijñáneśvara, a very small portion of which was first translated by Mr. H. T. Colebrooke, and published under the auspices of the Government of Bengal in 1810. And *second*, that it presents in a small compass the summary of *Smriti* learning of the middle or second epoch. By publishing the whole of *Yájñavalkya*, I wish to point out how small a portion of text-law is accessible to our administrators and on what a narrow basis a large superstructure is being suddenly raised. What is now accepted by the Courts as the Mitákshará, is a translation of Vijñáneśvara's comments on 36 verses of Yájñavalkya chapter II., (*Dáyabhága* section.) the total number of verses in that chapter being 307, and in the entire work, 1009. Yájñavalkya himself is only one of the numerous Smritikárs, and his authority outside his own Śákhá is of no peculiar importance.

The publication of the Sanskrit work in 1813, and a translation of the Dáyabhága section under the auspices of Government, stamped it at once with importance, being an official publication. The Mitákshará, and the few other treatises which were translated about that time, being the only works accessible as a rule to the European readers, they have formed the law literature of the higher judiciary of the country.[1]

[1] I subjoin a list of Translations prepared and published in the different Presidencies:—

Manu Smriti by Bṛigu [Institutes of Hindu Law, or the Ordinances of Manu according to the gloss of Kullúka,] translated by Sir W. Jones: London, 1807. [Jones' works, Edition in 13 vols.]

Jímútaváhana's Dáyabhága translated by H. T. Colebrooke, Esq.: Calcutta, 1810.

Yájñavalkya, chap. II. verses 134—149, with Vijñáneśvara's Comment entitled Mitákshará, translated by H. T. Colebrooke, Esq.: Calcutta, 1810.

Jagannath's Digest translated by H. T. Colebrooke, Esq.: London, 1801.

European scholars too, as for example Dr. Bühler, seem to adopt the view that a few publications[1] approved of by courts are alone to be considered as guides in settling the Hindu law. Thus, according to him, even so late as 1868, the Mitákshará of Vijñáveśvara, the Mayúkha, and the Nirṇayasindhu were the only recognised official guides. The original object of publication of the entire Mitákshará by Government, and of a translation of a small extract of thirty-six verses, with comments, was thus apparently forgotten, and what was nothing more than an introduction is now by some looked upon as the entire repository of Hindu law. In my opinion this is a grave error. Yájñavalkya is one of the exponents of Hindu law; and Vijñáneśvara's Mitákshará is an excellent commentary thereon. But to say that it is the whole Hindu law, and is accepted by the people as such, is not at all correct. In order to promote a more just appreciation of the study of Hindu law, and to correct many erroneous impressions, I have here given Yájñavalkya as a specimen, and in the above brief sketch I have attempted to shew the vast field which Hindu law really occupies; and further, to illustrate some of the difficulties which have been raised by a necessarily partial application of isolated texts, I have thrown into the form of Appendices some remarks bearing upon certain prominent topics of Hindu law. I am aware that in so doing I have not entered very fully into the subject; but I have been unable to do more, both my time and space having been limited. It may be that in the opinion of some, some of the topics indicated in the Introduction may have no direct bearing on

---

Dattaka Mímánsa of Nanda Pandit and Dattakæ Chandriká of Kubera. Translated by J. C. C. Sutherland, Esq. : Calcutta, 1821; Madras, 1825.

Dayakrama Sangraha of Śríkṛishṇa Tarkálankára, translated by P. M. Wynch, Esq. : Calcutta, 1818.

Selected verses from the First and Second Books of Yájñavalkya. Translated by Dr. E. Roër and W. N. Montriou, Esq. : Calcutta, 1859.

Viváda Chintamaní by Prosono Coomar Tagore, Calcutta, 1863 (?).

Vyavahára Mayúkha, Sanskrit oblong edition, published by order of Government in A. C. 1826 (Bombay).

———————English Translation (except of the Chapter on Ordeals) of H. Borradaile, Esq., published under the authority of Government: Surat, 1827 (Bombay).

——————— and of the Vyavahárádhyaya of the Mitákshará into Marathi; lithographed by order of Government in A. C. 1846.

Smṛiti Chandriká [Dáyabhaga] of Devaṇṇa-bhaṭṭa translated by Krishṇa Sawmy Iyer : Madras, 1866.

Dáyavibhága from the Paráśara Mádhava. Translated by A. C. Burnell, Esq., Ph. D.: Madras, 1868.

Varadarája's Vyavahára Nirṇaya, The Law of Partition and Succession from the MS. Sanskrit Text of, by A. C. Burnell, Esq., Ph. D. : Mangalore, 1872.

Dayadas-aślòki. Romanised text with an English Translation, by A. C. Burnel, Esq., Ph. D. : Mangalore, 1875.

[1] See the note at p. 54 to the Maráthí Digest entitled Hindu Dharma Śástra, by Jañardana Sakharam Gadgil, B.A. : 1868; and preface p. 5.

Hindu law as administered by Courts. But apart from their value as integral elements composing the Hindu Dharmaśástra, and as such necessary to a proper understanding of the whole subject, they bear very considerably on all questions of partition, succession, alienation and contracts. To a right apprehension and elucidation of these, the whole of the Puráṇic and the customary law becomes useful; and the publication of Yájñavalkya becomes serviceable—first, by way of comparison of what has been done, with what yet remains undone even in the limited work of translation, on the basis on which we have been going on; secondly, he is also serviceable as a guide to what may be called the second stage of Smṛiti literature. That the work of Yájñavalkya as it exists is not his own production may, I think, be now taken as proved. Vijñáneśvara himself admits[1] that it is a compendium by a follower of Yájñavalkya. Mitra Miśra in the Víramitrodaya[2] supports the same conclusion. Being a work composed in times subsequent to the time of Yájñavalkya, the compiler of the epitome draws upon other Smṛiti writers, although his own distinctive opinions are chiefly advocated. From its condensed and often enigmatic style and for other reasons I consider this to be either the last or one of the last works of the second epoch in the growth of the Dharmaśástra literature.

*I shall now proceed to say something about Yájñavalkya, and the composition, chronology, &c. of the Smṛiti which bears his name.*

The Smṛiti itself, though based on the views of some Ṛishi named Yájñavalkya, draws upon other writers whom it names, and Vijñáneśvara distinctly says that the mention of those writers is illustrative and not exhaustive of the number of those to whom the Dharmaśástra of the Áryas owes its origin. From an examination of the Yájñavalkya Smṛiti and its comparison with others, I may roughly state that I consider it to be later than Manu, Vasishṭha, Gautama, Śaṅkha, Likhita, and Háríta, nearly contemporaneous with Vishṇu, and prior to Paráśara and others. It does not seem to have at any one time formed the distinctive basis of the Áryan law, like Manu, Gautama, Śaṅkha, Likhita and Paráśara; but as bearing the impress of the leading exponent of the doctrines of the White Yajurveda, it formed the principal guide of the fifteen *Śákhás* of that Veda. These *Śákhás*, as we find from the Charaṇa Vyúha and other authorities, have chiefly predominated in the countries to the north of the Narmadá. And

[1] See Vijñáneśvara's Commentary on v. 1 ch. 1. (Mit. ch. i. p. 1 l. 1) where he says:—याज्ञवल्क्यशिष्यः कश्चित्प्रश्नोत्तररूपं याज्ञवल्क्यप्रणीतं धर्मशास्त्रं सङ्क्षिप्य कथयामास यथा मनुनोक्तं भृगुः ।

[2] The Víramitrodaya in its introductory comment on v. 1 chap. i. of Yájñavalkya says:—इह हि भगवता महर्षियाज्ञवल्क्येन लोकहिताय प्रणीतं धर्मशास्त्रं तच्छिष्यप्रवरो मानवं भृगुरिव प्रश्नोत्तरप्रबन्धेन सङ्क्षिप्य वक्तुं प्रस्तौति.

hence the greater prevalence of Yájñavalkya's doctrines amongst the followers of these *Śákhás* in the Northern courts, where there have been Vájasaneyi priests. The Vájasaneyins claim Yájñavalkya as their great *áchárya*. In this connection the following questions suggest themselves:—Who was Yájñavalkya; and when did he live? When was the present Smriti composed?

From an examination of the Áryan authorities, it appears there were many Yájñavalkyas living at different times, and that Yájñavalkya, like Janaka, is the title or surname of a class, and not the name of an individual. Except on such a hypothesis, all the facts in reference to Yájñavalkya and other Rishis, and Janaka and similar other kings, cannot be reconciled.

Beginning with the Vedic period, and the Mantra literature of the Rig-veda, we do not find such a person as Yájñavalkya mentioned therein. Nor is he found in the Rig-Bráhmaṇas. Coming to the Sútras of the Rig-veda, Yájñavalkya is not mentioned by Áśvaláyana, one of the earliest Sútra authors of the Rig-veda either in his Grihya or Śrauta Sútra. The followers of Rig-veda, however, in their daily Brahma-Yájña at the present day repeat the following quarter of the first verse of the Yájñavalkya Smriti after the initial verses or texts of the four Vedas (including Bráhmaṇas), the six Vedángas, and when the reciter comes to the Smritis and before he proceeds to the Puráṇas:[1]

योगीश्वरं याज्ञवल्क्यम् ॥

The original text of Áśvaláyana has no reference to any Smriti; and the above passage from Yájñavalkya has been added by the Prayoga-writers. Yájñavalkya therefore did not rank amongst the great Rishis in the time of Áśvaláyana (see the enumeration of Rishis at page 164 of the same work). Going on to the next Veda—the Yajush, we find Yájñavalkya mentioned as a cotemporary of Janaka in the Bráhmaṇa of the Taittiríya or the Black Yajurveda. Pursuing our course further on, Yájñavalkya comes prominently on the stage for the first time in connection with the Śukla or the White Yajurveda.[2] He is the Rishi of the Vájasaneyi branch of that portion of the Yajurveda.

In Bṛihadáraṇyaka, an *Upanishad* of the White Yajurveda, Yájñavalkya holds discourse with one Janaka[3] and Maitreyí. Now, Janaka was a king of the Videhas,[4] and a cotemporary of Ráma and Daśaratha.

[1] Áśvaláyana Grihya Sútra, Cal. 1869, p. 160 gives the following text of Áśvaláyana on which the present Bramha-Yájña is founded: III., iii.1,—अथ स्वाध्यायमधीयीत ऋचो यजूंषि सामान्यथर्वाङ्गिरसो ब्राह्मणानि कल्पान् गाथा नाराशंसीरितिहासपुराणानीति ॥ १ ॥

[2] *Bṛihadáraṇyaka* Upanishad: (Cal. ed., p. 139) *Adhyáya* i., *Bráhmaṇa* iv., see Sáyaṇa's note; M. Müller's History of Sanskrit Lit. p. 329.

[3] Bṛihadáraṇyaka Upanishad, *Adhyáya* v., *Bráhmaṇa* i. (Cal. edition p. 507.)

[4] He is mentioned in the Taittiríya Bráhmaṇa (*Káṇḍa* iii, *Adhyáya* x, *anuváka* 9, p. 755, Cal.) Sáyaṇa translates *Vaidehah* as the king of the country named Videha.

In the Válmiki Rámáyaṇa, the history of Janaka, the marriage of his daughter with Ráma, king of Ayodhyá's eldest son, is given. One of that Janaka's cotemporaries is Yájñavalkya Vájasaneyin. In the Bṛihadáraṇyaka *Upanishad* is given the discourse between Janaka and Yájñavalkya. This was in the Tretá age. In the Bhágavata Puráṇa, we find an account of the introduction of the Śukla Yajurveda which Yájñavalkya brought from the sun.[1]

---

[1] Bhágavata Puráṇa: XII, VI, 73—76: सूत उवाच । एवं स्तुतः स भगवान् वाजिरूपधरो हरिः ॥ यजूंष्ययातयामानि मुनयेऽदात्प्रसादितः ॥ ७३ ॥ यजुर्भिरकरोच्छाखा दशपञ्चच तैर्विभुः । जगृहुर्वाजसन्यस्ताः काण्वमाध्यन्दिनादयः ॥ ७४ ॥ जैमिनेः सामगस्यासीत्सुमंतुस्तनयो मुनिः । सुन्वांस्तु तत्सुतस्ताभ्यामेकैकां प्राह संहिताम् ॥ ७५ ॥ सुकर्मा चापि तच्छिष्यः सामवेदतरोर्महान् ॥ सहस्रं संहिताभेदं चक्रे साम्नां ततो द्विजः ॥ ७६ ॥

See to the same effect the following from the Vishṇu Puráṇa:—"यजुर्वेदतरोः शाखाः सप्तविंशत् महामुने ॥ वैशम्पायननामासौ व्यासशिष्यश्चकार वै । शिष्येभ्यः प्रददौ ताश्च जगृहुस्तेऽध्वयुक्रमात् । याज्ञवल्क्यस्तु तस्याभूद् ब्रह्मरातसुतो द्विजः । शिष्यः परमधर्मज्ञो गुरुशुश्रूषणे रतः सदा । ऋषिर्यश्च महाभेरोः समाजेष्वागमिष्यति । तस्य वै सप्तरात्रं तु ब्रह्महत्या भविष्यति । पूर्वमेवं मुनिगणैः समयोऽयं कृतो द्विज ॥ वैशम्पायन एकस्तु तं व्यतिक्रान्तवांस्तदा । स्वस्रीयं बालकं सोऽथ पदघृष्टमघातयत् । शिष्यानाह च भो शिष्या ब्रह्महत्यापरं व्रतम् । चरध्वं मत्कृते सर्वे निर्विचार्यमिदं तथा । अथाह याज्ञवल्क्यस्तं किमेतैर्बहुभिर्द्विजैः । क्लेशितैरल्पतेजोभिरिष्येऽहमिदं व्रतम् । ततः क्रुद्धो गुरुः प्राह याज्ञवल्क्यं महामुनिम् । मुच्यतां यस्त्वया ऽधीतं यतो विप्रावमानकः । निस्तेजसो वदस्येतान् यस्त्वं ब्राह्मणपुङ्गवान् । तेन शिष्येण नार्थोऽस्ति ममाज्ञाभङ्गकारिणा । याज्ञवल्क्यस्ततः प्राह भवत्वैतत्तवेर्यादितम् । ममाप्यलं त्वया त्यक्तो यदधीतं द्विज त्विदम् । श्रीपराशर उवाच । इत्युक्त्वा रुधिराक्तानि सरूपाणि यजूंष्यथ । छर्दयित्वा ददौ तस्मै ययौ च स्वेच्छया मुनिः । यजूंष्यथ विसृष्टानि याज्ञवल्क्येन वै द्विज । जगृहुस्तित्तिरीभूतास्तित्तिर्यास्तु च ते ततः । ब्रह्महत्याव्रतं घोरं गुरुणा नोदितैस्तु यैः । चरकाध्वर्यवस्ते तु चरणान्मुनिसत्तम । याज्ञवल्क्योऽपि मैत्रेय प्राणायामपरायणः । तुष्टाव प्रणतः सूर्यं यजूंष्यभिलषंस्ततः । याज्ञवल्क्य उवाच ॥ नमः सवित्रे द्वाराय मुनेरमिततेजसे । ऋग्यजुःसामरूपाय त्रयीधामात्मने नमः" इत्यादि । पराशर उवाच । इत्येवमादिभिस्तेवं स्तूयमानः स वै रविः । वाजिरूपधरः प्राह प्रीयमाणोऽभिवाञ्छितम् । याज्ञवल्क्यस्तथा प्राह प्रणिपत्य दिवाकरम् । यजूंषि तानि मे देहि यानि सन्ति न मे गुरौ । पराशर उवाच । एवमुक्तो ददौ तस्मै यजूंषि भगवान् रविः । अज्ञातयामसंज्ञानि यानि नो वेत्ति तद्गुरुः । यजूंषि यैरधीतानि तानि विप्रैर्द्विजोत्तम । वाजिनस्ते समाख्याताः सूर्यैश्वाश्वीभवत्यतः । शाखाभेदास्तु तेषां वै दशपञ्च च वाजिनाम् । काण्वाद्यास्तु महाभागा याज्ञवल्क्यप्रवर्तिताः"

Skanda Puráṇa: Nágara Khaṇḍa:—ततस्तस्मै ददौ सूर्यो लब्धिमात्रमशोधनम् । विद्यां हि तत्प्रभावाय सुतुष्टेनान्तरात्मना ॥ ततस्तं प्राह कर्णांते ममाश्वानां प्रविश्य वै । अभ्यासं कुरु विद्यानां वेदाध्ययनमाचर ॥ मन्मुखाद्ब्राह्मणश्रेष्ठ यथेतत्तव वाञ्छितम् । न ते स्यात्येन दोषोऽयं मम रश्मिसमुद्भवः ॥ एवमुक्तः स तेनाथ वाजिकर्णं समाश्रितः । लघुर्भूत्वा पठन् वेदान् भास्करस्य मुखात्ततः ॥ एवं सिद्धिं समापन्नो याज्ञवल्क्यो द्विजोत्तमः । कृत्वोपविषदं चारुवेदार्थैः सकलैर्युतम् ॥ जनकाय नरेंद्राय व्याख्याय च ततः परम् । कात्यायनं सुतं प्राप्य वेदसूत्रस्य कारकम् ॥ त्यक्त्वा कलेवरं तत्र ब्रह्मद्वारविनिर्मितं । तत्तेजो ब्रह्मणो गोत्रे योजयामास शक्तितः ॥ ..... MS.

See also Mahábhárata, Śanti-parva, Adyháyas. 317—318, leaves 220—226.

Váyu-Puráṇa:—अस्मिन्युगे कृतो व्यासः पाराशर्यः परन्तपः । द्वैपायन इति ख्यातो विष्णोरंशः प्रकीर्तितः ॥ ब्रह्मणा चोदितः सोऽस्मिन्श्रेदं वक्तुं प्रचक्रमे । अथ शिष्यान् स जग्राह चतुरो वेदकारणात् ॥ जैमिनिं च सुमन्तुं च वैशम्पायनमेव च । पैलं तेषां चतुर्थं तु पञ्चमं लोमहर्षणम् ॥ ऋग्वेदाधारकं पैलं जग्राह विधिवद्द्विजम् । यजुर्वेदप्रवक्तारं वैशम्पायनमेव च ॥ जैमिनिं सामवेदार्थधारकं सोन्वपद्यत । तथैवाथर्ववेदस्य सुमन्तुमृषिसत्तमम् ॥ इतिहासपुराणस्य वाकोवाक्यस्य चैव हि । मां चैव प्रतिजग्राह भगवानीश्वरः प्रभुः ॥ एक आसीद्यजुर्वेदस्तं चतुर्धा व्यकल्पयत् ॥ .....

This bringing or introducing the White Yajurveda cannot be carried prior to the Dvápara or the third Yuga. For Vyása divided the Veda into four portions in that age.[1] Previously to that, there was one Veda

---

चतस्रः संहिताः कृत्वा वाष्कलिर्द्विजसत्तमः । शिष्यानध्यापयामास शुश्रूषाभिरतान्हितान् ॥ बोध्यं तु प्रथमां शाखां द्वितीयामग्निजावरम् । पाराशरं तृतीयां तु याज्ञवल्क्यमथापरम् ॥ इन्द्रप्रमतिरेकं तं संहितां द्विजसत्तमः । अध्यापयन् महाभाग मार्कण्डेयं यशस्विनम् ॥.....

जनकस्याश्वमेधे तु महानासीत्समागमः । ऋषीणां तु सहस्राणि तत्राजग्मुरनेकशः ॥ राजर्षेर्जनकस्याथ तं यज्ञं हि दिदृक्षवः । आगतान् ब्राह्मणान् दृष्ट्वा जिज्ञासास्याभवत्ततः ॥ कोन्वेषां ब्राह्मणः श्रेष्ठः कथं मे निश्चयो भवेत् । इति निश्चित्य मनसा बुद्धिं चक्रे जनाधिपः ॥ गवां सहस्रमादाय सुवर्णमधिकं ततः । ग्रामान् रत्नानि दासीश्च मुनीन्प्राह नराधिपः ॥ सर्वानहं प्रपन्नोस्मि शिरसा श्रेष्ठभागिनः । यदेतदाहृतं दिव्यं यो वः श्रेष्ठतमो भवेत् ॥ तस्मै तदुपनीतं हि वियाद्वित्तं द्विजोत्तमाः । जनकस्य वचः श्रुत्वा मुनयस्ते भृतिक्षमाः ॥ दृष्ट्वा धनं महासारं धनवृद्ध्या जिघृक्षवः । स्पर्धयाचक्रुरन्योन्यं वेदज्ञानमदोल्बणाः ॥ मनसा गतचित्तास्ते ममेदं धनमित्युत । ममैवैतन्न चान्यस्य ब्रूहि किं वा विकल्प्यते ॥ इत्येवं धनदेषिण वादांश्चक्रुरनेकशः । तथाप्यस्तत्र वै विद्वान् ब्रह्मवाहसतः कविः ॥ याज्ञवल्क्यो महातेजास्तपस्वी ब्रह्मवित्तमः । ब्रह्मर्षीगात्समुत्पन्नो वाक्यं प्रोवाच सुस्वरं ॥ शिष्यं ब्रह्मविदांश्रेष्ठो धनमेतद् गृहाण भो । नयस्व च गृहं वश्यमेतन्नास्त्यत्र संशयः ॥

ऋषयस्त्वेकतः सर्वे याज्ञवल्क्यस्तथैकतः । सर्वे ते मुनयस्तेन याज्ञवल्क्येन धीमता ॥ वादाः समभवंस्तत्र धनहेतोर्महात्मनाम् । एकैकशस्ततः पृष्ट्वा नैवोत्तरमथाब्रुवन् ॥ तान्विजित्य मुनीन् सर्वान् ब्रह्मराशिर्महाद्युतिः । शाकल्यमिति होवाच पदकर्तारमंजसा ॥ शाकल्य वद वक्तव्यं किंध्यायन्नवतिष्ठसे ॥ पूर्णस्त्वं जडमानेन वातध्वांतो यथा वृतिः ॥ एवं स धर्षितस्तेन रोषताम्रास्यलोचनः । प्रोवाच याज्ञवल्क्यं स परुषं मुनिसंनिधौ ॥ त्वमस्मांस्तृणवत्कृत्वा तथैवान्यान् द्विजोत्तमान् । विद्याधनं महासारं स्वयंग्राहं जिघृक्षसि ॥ शाकल्येनैवमुक्तस्तु याज्ञवल्क्यः समब्रवीत् ॥

षडशीतिस्तु येनोक्ताः संहिता यजुषां शुभाः । शिष्येभ्यः प्रददौ ताश्च जगृहुस्ते विधानतः ॥ एकस्तत्र परिस्यक्तो याज्ञवल्क्यो महातपाः । षडशीतेश्च तस्यापि संहितानां विकल्पकाः ॥ सर्वेषामेव तेषां वै त्रिधा भेदाः प्रकीर्तिताः । त्रिधाभेदास्तु ते प्रोक्ता भेदेस्मिन्वयमे शुभे ॥ उदीच्या मध्यदेशाश्च प्राच्याश्चैव पृथग्विधाः । श्यामायनिरुदीच्यानां प्रधानः संबभूवह ॥ मध्यदेशप्रतिष्ठानामरुणिः प्रथमः स्मृतः । आलंबिरादिः प्राच्यानां त्रयोदश्यादयस्तु ते ॥ इत्येते चरकाः प्रोक्ताः संहितावादिनां द्विजाः ॥

अहमेव चरिष्यामि तिष्ठंतु मुनयस्त्विमे । बलं चोत्थापयिष्यामि तपसा स्वेन भावितः ॥ एवमुक्त्वततः शुद्धो याज्ञवल्क्यमथाब्रवीत् । उवाच यत्त्वयाधीतं सर्वं प्रत्यर्पयस्व मे ॥ एवमुक्तः सरूपाणि यजूंषि प्रददौ गुणैः । रुधिरेण तथाक्तानि छर्दित्वा ब्रह्मवित्तमः ॥ ततः स ध्यानमास्थाय सूर्यमाराधयद्विजाः । तत्सूर्यब्रह्म यच्छन्तं खं गत्वा यत्प्रतिष्ठते ॥ ततो यानि गतान्यूर्ध्वं यजूंष्यादित्यमंडलं । तानि तस्मै ददौ तुष्टः सूर्योपि ब्रह्मरातये ॥ अश्वरूपाय मार्तण्डो याज्ञवल्क्याय धीमते । यजूंष्यधीयते यानि ब्राह्मणा येन केन च ॥ अश्वरूपाय दत्तानि ततस्ते वाजिनोभवन् । ब्रह्महत्या तु यैश्चीर्णा चरणाचरकाः स्मृताः ॥ वैशम्पायनशिष्यास्ते चरकाः समुदाहृताः ॥ (MS.)

[1] Bhágavata Puráṇa, Skandha i., Adh. iv., vv. 14—24; leaf 10, p.°2 and l. 11, p. 1.

द्वापरे समनुप्राप्ते तृतीये युगपर्यये । जातः पराशरायोगी वासव्यां कलया हरेः ॥ १४ ॥ स कदाचित्सरस्वत्या उपस्पृश्य जलं शुचि । विविक्तदेश आसीन उदिते रविमण्डले ॥ १५ ॥ परावरज्ञः स ऋषिः कालेनाव्यक्तरंहसा । युगधर्मव्यतिकरं प्राप्तं भुवि युगेयुगे ॥ १६ ॥ भौतिकानां च भावानां शक्तिह्रासं च तत्कृतम् । अश्रद्दधानान्निःसत्त्वान्दुर्मेधान् ह्रसितायुषः ॥ १७ ॥ दुर्भगांश्च जनान्वीक्ष्य मुनिर्दिव्येन चक्षुषा । सर्ववर्णाश्रमाणां यद्दध्यौ हितममोघदृक् ॥ १८ ॥ चातुर्होत्रं कर्मशुद्धं प्रजानां वीक्ष्य वैदिकम् । व्यदधाद्यज्ञसन्तत्यै वेदमेकं चतुर्विधम् ॥ १९ ॥ ऋग्यजुःसामाथर्वाख्या वेदाश्चत्वार उद्धृताः । इतिहासपुराणं च पंचमो वेद उच्यते ॥ २० ॥ तत्रर्ग्वेदधरः पैलः सामगो जैमिनिः कविः । वैशम्पायन एवैको निष्णातो यजुषामुत ॥ २१ ॥ अथर्वाङ्गिरसामासीत्सुमन्तुर्दारुणो मुनिः । इतिहासपुराणानां पिता मे रोमहर्षणः ॥ २२ ॥ त एत ऋषयो वेदं स्वंस्वं व्यस्यन्बहुशाखकं । शिष्यैः प्रशिष्यैस्तच्छिष्यैर्वेदास्ते शाखिनोऽभवन् ॥ २३ ॥ त एव वेदा दुर्मेधैर्धार्यन्ते पुरुषैर्यथा । एवं चकार भगवान् व्यासः कृपणवत्सलः ॥ २४ ॥

alone, and one sacrificial fire.[1] The Yájñavalkya, who belongs to the Dvápara period, even if he were one and the same Yájñavalkya as the expounder of the White Yajurveda, could not have been the cotemporary of Janaka Videha and Ráma Daśarathí. The Yájñavalkya of the Dvápara must have lived after the Dvápara Yuga was well advanced, for it is then that the fourfold division of the Veda is said to have been made. Whereas the cotemporary of Janaka Videha lived in the beginning of the Treta period, for it was at that time that that Janaka flourished. Again, another Yájñavalkya is mentioned as learning the *Yoga* from one of Ráma's descendants. (See the Bhágavata Puráṇa ix., xii., 4.) This prince's pedigree stands thus :—

Ráma. 1 — Kusa. 2 — Átithi. 3 — Nishádhah. 4 — Nabhah. 5 — Pundaríkah. 6 — Kshémadhanvá. 7 — Devánikah. 8 — Aníhah. 9 — Pariyatrah. 10 — Balah. 11 — Sthalah. 12 — Arakasambhútah. 13 — Vajranábhah. 14 — Khagaṇah. 15 — Vidhṛitih. 16 — Hirányanábhah. 17 —

This Hirányanábhah studied, it is said, the *Yoga* from Jaiminí, one of the first disciples of Vyása and the author of the Púrva-Mímáṅsá, and taught it to Yájñavalkya.[2] Again, Yájñavalkya officiated as Adhvaryu at the great Rájasúya Yajña kingly sacrifice of Yudhishṭhira.[3] And from the different officiating priests engaged in the ceremony there is reason to conclude that the Yájñavalkya who introduced the White Yajurvéda was then the Adhvaryú; for all the followers of Vyása to whom the different Vedas were first taught by him, are named as officiating priests—Vyása himself acting as Bramhá.[4]

---

[1] Bhágavata Sk. ix. Adhy. xiv. v. 48, leaf 26.

एक एव पुरा वेदः प्रणवः सर्ववाङ्मयः । देवो नारायणो नान्य एकोऽग्निर्वर्ण एव च ॥

On this Śridhara observes :—

पुरा कृतयुगे सर्ववाङ्मयः सर्वासां वाचां बीजभूतः प्रणव एक एव वेदः देवश्च नारायण एक एव अग्निश्चैक एव लौकिकः वर्णश्चैक एव हंसोनाम ।

[2] Bhágava Puráṇa, IX. xii 1—4. कुशस्य चातिथिस्तस्मान्निषधस्तत्सुतो नभः । पुण्डरीकोऽथ तत्पुत्रः क्षेमधन्वाऽभवत्ततः ॥ १ ॥ देवानीकस्ततोऽनीहः पारियात्रोथ तत्सुतः । ततो बलस्थलस्तस्माद्वज्रनाभोऽर्कसंभवः ॥ २ ॥ खगणस्तत्सुतस्तस्माद्विधृतिश्चाभवत्सुतः । ततो हिरण्यनाभोभूत् योगाचार्यस्तु जैमिनेः॥३॥शिष्यः कौशल्य अध्यात्मं याज्ञवल्क्योऽध्यगाच्चतः । योगं महोदयमृषिर्हृदयग्रंथिभेदकम् ॥४॥

[3] See the Mahábhárata, Sabhá Parva, XXXIII. 35, leaf 37, page 1.

[4] Id., page 1, leaf 3, vv. 26—37.

वैशम्पायन उवाच । अनुज्ञातस्तु कृष्णेन पाण्डवो भ्रातृभिः सह । ईजितुं राजसूयेन साधनान्युपचक्रमे ॥२६॥ ततस्त्वाज्ञापयामास पाण्डवोरिनिबर्हणः । सहदेवं युधांश्रेष्ठं मंत्रिणश्चैव सर्वशः ॥ २७ ॥ अस्मिन् क्रतौ यथोक्तानि यज्ञाङ्गानि द्विजातिभिः । तथोपकरणं सर्वं मङ्गल्यानि च सर्वशः ॥ २८ ॥ आधियज्ञांश्च संभारान् धौम्योक्तान् क्षिप्रमेव हि । समानयन्तु पुरुषा यथायोगं यथाक्रमम् ॥ २९ ॥ इन्द्रसेनो विशोकश्च पुरुभार्जुनसारथिः । अन्नाद्याहरणे युक्ताः सन्तु मत्प्रियकाम्यया ॥ ३० ॥ सर्वकामाश्च कार्यन्तां रसगन्धसमन्विताः । मनोरथमीतिकरा द्विजानां कुरुसत्तम ॥ ३१ ॥ तद्वाक्यसमकालं च कृतं सर्वं न्यवेदयत् । सहदेवो युधांश्रेष्ठो धर्मराजे युधिष्ठिरे ॥ ३२ ॥ ततो द्वैपायनो राजन्नृत्विजः समुपानयत् । वेदानिव महाभागान्साक्षान्मू-

Yájñavalkya again is spoken of as discoursing on various religious and philosophic topics with Yudhishṭhira after the conclusion of the great battle at Kurukshetra.[1]

Thus we have several Yájñavalkyas, one cotemporary with Janaka-videhi, another mentioned as studying the *Yoga* from the 17th prince after Ráma, a third officiating at the Rájasúya sacrifice of Yudhishṭhira, a fourth studying under Sákala, cursed by Śákala and blessed by the sun with the gift of expounding the White Yajurveda. This last is noted in the Puráṇas as having had two wives:—1, Maitreyí, and 2, Kátyáyani. By the latter, he had a son named Kátyáyana, who is said to have composed Sútras to expound the White Yajurveda. Other Yájñavalkyas too are noticed in the histories and the Puráṇas. Which of these Yájñavalkyas is the author of the Yájñavalkya Smṛiti? Is any of the above Yájñavalkyas the author of that code? I am afraid answers to both the above questions in the present state of our knowledge must be very indefinite and unsatisfactory. There is nothing to show that Yájñavalkya, the expounder of the Śukla Yajurveda, is the author of the Yájñavalkya Smṛiti; nor is there any reason to believe that he and the cotemporary of Janaka Videhi are one and the same person. One Janaka is directly mentioned in the Taittiríya Yajurveda,[2] whereas Yájñavalkya is not; and as the second division of the Yajurveda was evidently promulgated at a later stage, I take the Yájñavalkya, who was cotemporary with Janaka, to be different from the Yájñavalkya, who was a pupil of Jaimini by one account and of Vaiśampáyana by another. This will also agree with the account which makes a Yájñavalkya receive his *yoga-vidyá* from a prince seventeenth in descent from Ráma, the son-in-law of the above Janaka.

The story which connects Yájñavalkya with Kátyáyana is also useful, as Kátyáyana is stated to have composed the Sútras which expound the ritual of the White Yajurveda. The positive age of the Yájñavalkya, the expounder of the White Yajurveda, is uncertain; but from the style of that work and that of the Yájñavalkya Smṛiti, it is clear that they are not the works of the same author. In the Yájñavalkya Smṛiti, Yájñavalkya himself is mentioned as one of the Smṛiti authors. But from this circumstance alone no safe inference can be drawn. For[3] the practice of writers mentioning their own names in their own works

---

क्षिमतो द्विजान् ॥ ३३ ॥ स्वयं ब्रह्मत्वमकरोत्तस्य सत्यवतीसुतः । धनञ्जयानामृषभः सुसामा सामगोभवत् ॥ ३४ ॥ याज्ञवल्क्यो बभूवाथ ब्रह्मिष्ठोऽध्वर्युसत्तमः । पैलो होता वसोः पुत्रो धौम्येन सहितोभवत् ॥ ३५ ॥ एतेषां पुत्रवर्गाश्च शिष्याश्च भरतर्षभ । बभूवुर्होत्रगाः सर्वे वेदवेदाङ्गपारगाः ॥ ३६ ॥ तैर्वाचयित्वा पुण्याह- मूहयित्वा च तं विधिं । शास्त्रोक्तं पूजयामासुस्तदेवयजनं महत् ॥ ३७ ॥

[1] Mahábhárata Śánti-parva (xii.) Adhyáya cccix—cccxvii, leaves 213 to 221.

[2] See note above page lii and Sayaṇa's Comments thereon.

[3] See pp. 158, 159, note 2.

is very old. That he was some follower of the Yájñavalkya school is accepted by Vijñáneśvara and Mitra Miśra.

The teaching of the doctrines of Yoga in this Smṛiti to a considerable extent also distinguishes it from other Smṛitis.

As regards the time of its composition, much cannot yet be definitively said. A portion of this Smṛiti occurs in the Agni Puráṇa.[1] The whole of Chapter II. of Yájñavalkya is thus reproduced. The only portions from the first chapter which are extracted are those which refer to *Śráddha* and Vináyaka Śánti. The first extract is put into the mouth of Pushkara and the rest into that of Agni.

In the Garuḍa Mahá Puráṇa, however, the first and third chapters of this Smṛiti, or considerable portions of them, are found almost entire.[2]

---

[1] *Yájñavalkya.* — *Agni Puráṇa.*

I. 228, 270..... .....Ch. 163 pp. 150, 154.
I. 272 to 293.....Ch. 265 pp. 470 to 471.
II. 4—67.....Ch. 252, v. 33 (p. 410) to Ch. 253 (p. 416).
II. 68, to 203.....Ch. 254 to 256 pp. 416 to 428.
II. 204 to 307 .....Ch. 257 pp. 430 to 437.

[2] The following would be a rough sketch of the comparison of the Garuḍa Puráṇa and the Smṛiti texts :—

*Garuḍa Puráṇa.* — *Yájñavalkya.*

Ch. I. (of that portion where the dialogue begins). .....Ch. I. vv. 1—13.
Ch. II. .....Ch. I. vv. 14, 50.
Ch. III. .....Ch. I. vv. 51—89. To this are added an opening hemistich and a closing one.
Ch. IV. .....Ch. I. vv. 90—189 ; some of these are omitted, and the last hemistich is new.
Ch. V.....Ch. I. vv. 190, 197, the first and the last hemistiches are added.
Ch. VI. .....Ch. I. vv. 198—269½. The first hemistich is new.
Ch. VII.....Ch. I. vv. 269½—293½. Some verses omitted, and the opening hemistich is added.
Ch. VIII. .....Ch. I. vv. 294—307½. No addition ; the last two are omitted.
Ch. IX. .....Ch. III. vv. 45—55. The last two verses are omitted.
Ch. X.....Ch. III. vv. 56—59, and v. 205. The intervening 145 verses are omitted.
Ch. XI. .....Ch. III. vv. 206—218. There are omissions, and the verses do not literally agree, though they do so in substance.
Ch. XII. .....Ch. III. vv. 219 to 328.
Ch. XIII. .....Ch. III. vv. 1—14. Several verses are omitted.

It is strange that a great part of the present Smṛiti of Yájñavalkya should be thus found in the Garuḍa Puráṇa. It is to be noted, however, that the whole of the second chapter, and the concluding portion of the first chapter referring to the duties of a king and the disquisition of Yájñavalkya on the nature of the soul under the head of an ascetic's duties, are not met with in this Puráṇa. As regards the portion that does appear, it is divided into thirteen chapters, each chapter as a rule corresponding to one or more sub-headings of a chapter of Yájñavalkya as given in Part II. Some chapters comprise more than two sub-sections. Each of the chapters in the Garuḍa Puráṇa contains a preface and a conclusion consisting generally of not more than a hemistich, which are not found in Yájñavalkya. This circumstance of common verses suggests two hypotheses—first, that the original edition of the digest of Yájñavalkya is represented by the Garuḍa Puráṇa, while its present edition as we have it, and such as was accepted by Vijñáneśvara and his predecessors in the Dharmaśástra line, represents the same as supplemented by the addition of the portion on *Vyavahára* as we find it; and the second is that the author of Garuḍa Puráṇa, instead of incorporating the whole of the Smṛiti, borrowed only such portions of it as he considered of importance and interest to the public. The circumstance that *Vyavahára* is undoubtedly a later development than *Áchára* or *Práyaschitta*, lends some countenance to the first hypothesis. But for more reasons than one I cannot accept it as the correct one: because I.—The present Smṛiti divided into three chapters has been accepted as a complete work from the times of Aparárka and Śúlapáṇi at the least; and now to accept the hypothesis under consideration would be to invest the Garuḍa Puráṇa with an antiquity to which, on the facts now before me, it seems to have no claim. II.—The express mention[1] of Yájñavalkya's law being incidentally introduced into the Puráṇa renders it almost certain that that Puráṇa borrowed such materials as were then considered important from the first and the third chapters of the digest-maker of Yájñavalkya. Any little doubt which might otherwise remain on the point is removed by the evidence of language, namely, the utter dissimilarity between the diction of a Puráṇa and that of a digest. III.—The omission of the *Adhyátma Vidyá* (science of the soul) portion of chapter III., and of a few verses in each sub-heading remains unexplained on the first hypothesis.

It being thus my opinion that Yájñavalkya's digest is prior in point of time to the Garuḍa Puráṇa, the fact of only a part of that digest being narrated in reply to an enquiry which demanded the whole of Yájñavalkya's Institutes[2] is explicable only on the supposition

[1] As indicated by the words याज्ञवल्क्य उवाच (so said Yájñavalkaya), repeated at the beginning of each chapter.

[2] महेश्वर उवाच। याज्ञवल्क्येन यत्पूर्वं धर्मः प्रोक्तः कथं हरे। तन्मे कथय केशिघ्न यथातत्त्वेन माधव॥

that in the time of that Puráṇa, the Vyavahára portion was considered either a subordinate branch of the Dharmaśástra, or had been superseded by other works expounding the traditions which governed the people since the composition of the Yájñavalkya Smṛiti. The same remarks will to a great extent apply to the occurrence of the Smṛiti in the Agni Puráṇa. Both these Puráṇas favor the Vaishṇava creed, and as such have a large following in those parts of India where the White Yajurveda itself would claim greater prevalence.

The antagonism between the Vájasaneyins and the other followers of the Vedas is a fact recorded by past and current history. Its origin is traced to Yájñavalkya's quarrel with Śákala and Vaiśampáyana. The study of the White Yajurveda has how considerably declined; and although numerically the Śukla-Yajurvedins are a large class, they are generally comparatively illiterate, and in the performance of their priestly duties they are obliged to leave everything to their *Drávida* agents at such places as Prayága (Allahabad), Benares, and Gayá.

---

I shall now make a few remarks on the *Nibandhas* (treatises or digests), and *Tíkás* (commentaries). It would be great service if some student of the Dharmaśástra would trace and write a history of the different *Nibandhas* (Treatises) and *Tíkás* (commentaries). For these are now the repositories of our customary law, after the Smṛitis and the Puraṇás. Mr. Steele in his "Summary of the Law and Customs of Hindu Castes within the Dekkan Provinces subject to the Presidency of Bombay, chiefly affecting Civil Suits,"[1] gives a list of Sanskṛit books composing the Dharmaśástra. He names only 24 Smṛitis which I have not repeated here as they are already included in my previous lists. One mentioned by Mr. Steele as not obtainable in Poona—namely, Kokila, does not occur in Stenzler's list, but it is found in this Presidency. The other works—such as either *Nibandhas* or *Tíkás*—I have thrown into an alphabetical list,[2] and have affixed a few cursory remarks against some of them. The spelling has been changed in conformity with my general plan.

[1] Bombay: 1827.

[2] *Dharmaśástra* works mentioned by Mr. Steele as being available at Poona:—

Aśaucha-nirṇaya.
Aśaucha-śekhara.
Archá-śuddhi.
Áśvaláyana Bháshya.
Do. Kárikábháshya by Śankaráchárya.
Do. Vṛitti.
Do. (another version)
Ápastamba Tíka, by Dhútasvámin.
Áchára-Ratna.
Áchárárka.
Áhnika-Kamalákara.
Áhnika (Bhaṭṭojí).
Áhnika-Nirṇaya.
Áhnika (Nagojibhaṭṭa).
Uddyotas (12 divisions by Gágábhaṭṭa).
Ujjvalá.
Upavyúha Bháshya on the Charaṇa Vyúha.
I have a MS. of Mahidása's Bháshya on the Charaṇa Vyúha. But it is not termed Upavyúha as Mr. Steele calls it, although from his description it seems to be the same.
Ekádaśí-nirṇaya.
Kalpa.
It is a generic term, and

therefore unmeaning, as the name of an individual work. It is indeed not unusual to cite passages under the name of कल्प only. But in all those cases the meaning of that abbreviation is not ambiguous to the native reader who makes out from the context which *kalpa sutra* is referred to. Again Anantadeva in his *śrauta* Prayogas abbreviates Kalpa-sára Kárika into Kalpas.

Karka Darśana.

Karka Bháshya.

Kalpa Ratnávalí.

Karmavipáka.

Karma Vipákárka.

Kalpataru.

Kálanirṇaya.

Káśínatha Bháshya.

Kálatatvavivechana.

Kálanirṇaya Prákasa.

Kála-Mádhava.

It treats of the time proper for the various religious rites and not of Vratas alone.

Kálánala (?)

Kási-Díkshit-Áhmika.

Kullúkabhaṭṭa.

I agree with Babu Shamachurn in thinking that he was a Gauda Bráhmana instead of a Karnatic one.

Kṛitya Ratnávalí.

Gadádhara Bháshya.

Gotra Pravara Nirṇaya.

Gopínatha-bhaṭṭi.

47 Gotra Pravara Nirṇaya.

Govindárṇava.

It appears to me that Steele had the commentary of Govind rája on Manu in view. The Govindárṇava is a digest which has been ascribed to Narasimha by Shamchurn Sircar (see his Vyavastha Chandriká Sanskrit preface p. 15).

Grihyágni-ságara.

Chatur-vimśati Smriti-Vyákhyá.

The author is Bhaṭṭoji Díkshita.

Chularee (?)

Charaṇa-vyúha.

Jayasimha Kalpadruma.

Jayaráma Bháshya.

Jayasimha Pratápa.

Játiviveka, large and small

Jívat Śraddha Paddhati

Tithi-Nirṇaya Bhaṭṭojí-díkshita

Tithi-Nirṇaya Gangárám-bhaṭṭa.

Tryambakí.

Trimsát ślokí.

Datta Mímámsá.

Mr. Steele says: "This is a work well known in the Carnatic country," but he does not mention its author. The work mentioned by him was not in use in Poona. The one here mentioned may therefore be the work by Vidyáraṇya under this title (see Shamchurn Sircar's preface to Sanskrit Vyavastha Chandriká, p. 19).

Datta-Kaustubha.

Dáya Vibhaga.

Probably that of Jímúta Vahana. It is strange that the account of this work should be so meagre.

Dána Khaṇḍa.

I know only of one Dána Khaṇḍa, namely, that of Hemadri. But it does not treat of Vratas.

Dánachandriká.

Dinakaroddyota.

This is a repetition. The name of the author is unintelligibly given. It is Gágábhaṭṭa, otherwise called Viśveśvara.

Dvaita-nirṇaya.

The work treats of knotty points in Dharmaśástra, and not 'of the individuality of things as distinct from the divine spirit.' Evidently Mr. Steele was misled by the title of the work, and wrote his remarks without having a look at its contents.

Dharmasindhu.

Dharma Pravṛitti.

Its author is Náráyaṇa Bhaṭṭa.

Narasimha-Pratápa.

Nak-Pooshp marla.

I can make out nothing of this name.

Nága-deva-Kṛita-Áhnika.

This same work appears again as Bhattoji Krita Ahnika (sup. 12), strangely it is stated here to be 700 years old while on p. 13 it is put down as 300 years old.

Náráyaṇa-Bhatti.

Nirṇaya Dípiká.

Nirbandha Siromani.

Nirṇaya Sindhu.

Nirṇayámṛita.

Nandarája Krita.

Nṛisimhárchana Chandriká

Paríkshá Mitrodaya.

Paraśurama Pratápa.

Purushártha-Chintámaṇi.

Púrta Kamalákara.

Pungtee Aradhava.

The name is unintelligible.

Pravara Mañjarí.

Prayoga Darpaṇa.

Pravoga Párijáta.

Práyaschittendu-Śekhara.

Prithvi Chandrodaya-Samaya khaṇḍa.

This is repetition (p. 13).

Prithvi-Chandrodaya.

Baudháyana Tíká.

Better known as the Bháshya of Bhavasvámin.

Bháskara (?).

Bhárgavárchana Dípika.

Bhojana Kutúhala.

Mayúkha.

It is not correct to say that the Mayúkhas are of chief notoriety in the Carnatic.

Madana Párijáta.

Madanapála is the name of the king under whose auspices Viśveśvara composed the work. The king was a Jat by caste.

Maheśa bhatti.

Madana Mahárṇava.

Madana Ratna.

Mádhava.

According to Babu Shamchurn it is a Maharáshtra work.
Matridatta Bháshya.
Mitakshará of Vijñáneśvara.
Medhátithi.
Rámárchana Chandriká.
Ráma Vájapeyin.
Renukákarika.
Rudra-Paddhati.
Vásudeví
Vidhána-Párijáta
Víramitrodaya.
The work is said to be so old as 600 years, on what authority it does not appear. It treats of Vyavahára Áchára, and as I am informed of Práyaśchitta also, but I have not yet come across the last division of the work.
Vratárka.
Vratarája.
Vrata-Chandriká.
Vrata-Kaumudí.
Vyavahára-Mitrodaya.
Vyavahára-Sekhara.
Śánti-Kamalákara.
——sára.
Śikshá-Bháshya
Śúdra Kamalákara.
Śankara-bhatti.
Sápindya Nirnaya.
——(Another work)
Sápindya Pradípa.
Sára Sangraha.
Subodhiní.
That its title alone should be known in Poona goes to show that Vijñáneśvara or his commentators did not enjoy the importance with which they are now credited.
Súryáruna Samváda.
Samskára Ratna.
Samskára Kaustubha.
Samskára Sára.
Sannyása Paddhati.
Samskára Ratnamálá.
Smárta Vishnuekadsi nirnaya.
Smriti Darpana.
Smrityartha-Sára.
Smrityartha Sangraha.
Smrityartha Sára.
Smriti Kaustubha.
The contents given are incorrect. The work refers to Vratas alone.
Harihara Bháshya.
It is a commentary on the Sútra of Kátyáyana.
Hemádri.
(12 divisions).

The Khandesh list gives the 4 Vedas, 18 Smritis, 11 Upa Smritis, 18 Puránas, 4 Upa Puránas, the Rámayana, the Máhábhárata, and 5 works on Vyavahára, namely, (1) Vijñáneśvara, (2) Mayúkha, (3) Uddyota, (4) Mádhava, and (5) Prutapust khund (?) What the last was it is hard to say. The name is badly spelt. It may be one of the divisions of Hemádri or Paraśuráma Pratápa.

Works not contained in the above enumeration but mentioned by Mr. Colebrooke.

(See pp. 24, 25 of Steele's Summary.)

Three (?) Chintamani of Váchaspati Miśra.
Dáyakrama Sangraha.
Daya Tattva.
Dáyabhága—Three Commentaries on the.
Dáyanirnaya.
Dayatattva, Commentary on the.
Dípakaliká.
Dharmaratna.
Dharpidhara's Commentary on Manu.
NandaPandita's Comments on Vishnu Smriti. It is called Vaijayanti.
Nyáya Sarvasva.
Bálambhatti.
Viváda-chandra.
Viváda-Ratnákara.
Vyavahára-Ratnákara.
Vyavahára-Tílaka.
Vyavahára-Tattva.
Smriti-Ratnávalí.
Smriti-Chandriká.
Haradattí.

Works referred to by Mr. Colebrooke, and not noted by Mr. Steele (see *Colebrooke's* Preface to the Translation of the Mitákshará.)

Áchárya Chandriká.
Kalpa-druma.
Kalpa-latá.
Kámadhenu.
Kullúka's Comments on Yama Smriti.
Goyíchandra.
Graheśvara.
Chhandoga Parisishta.
Jitendriya.
Dáyarahasya.
Dvaita-nirnaya of Váchaspati.
Dvaita Parisishta.
Dhareśvara.
Parisishta Prakása.
Pandita Sarvasva.
Pratítákshará.
Pradípa.
Bálarúpa.
Bráhmana Sarvasva.
Bhavadeva's works.
Bhágurí's Comments on Manu.
Murári Miśra.
Yájñavalkya, Visvarúpa's Comments on.
Yájñavalkya, Devabodha's Comments on.
Viváda Bhangárnava.
Vivádasárápava.
Vivádarnavasetu.
Śráddha-viveka
Smriti-tattva.
Smriti-Ratnávali.
Harihara.

Additional works mentioned by Mr. Shamchurn Sircar in his Vyavastha Chandriká :—

Aparárka.
Dattaka Didhiti.
A work has been recently published under this name at Calcutta, but I find it is only an extract from the Samskára Kaustubha of Ananta Deva on the subject; the Calcutta publishers name it as a work of Ananta-

Appended is a list of the 484 authorities quoted by Kamalákara in the Nirṇayasindhu alone :—

| | No. of References. |
|---|---|
| Agastyasamhitá | 5 |
| Agni | 2 |
| Agnipuráṇa | 13 |
| Angiras | 27 |
| Aṇḍavila | 1 |
| Atri | 22 |
| Adbhutaságara | 2 |
| Anantabhaṭṭa | 10 |
| Anantabháshya | 1 |
| Aniruddhabhaṭṭa | 1 |
| Aparárka | 106 |
| Amarakośa | 1 |
| Áchárapradípa | 1 |
| Áchárya | 5 |
| Ácháryachúdamaṇi | 3 |
| Ádipuráṇa | 5 |
| Ádityapuráṇa | 22 |
| Ápastamba | 36 |
| Ápastambasútra | 4 |
| Ayurveda | 2 |
| Árshṭisheṇa | 1 |
| Áśárka | 5 |
| Áśauchaprakáśa | 1 |
| Áśvamedhika | 1 |
| Áśvaláyana | 57 |
| Áśvaláyanagṛihya | 4 |
| Ápastambabháshyá Árthasangraha | 1 |
| Iśánasamhitá | 3 |
| Uttarakhaṇḍa | 1 |
| Udíchí | 1 |
| Uśanas | 17 |
| Rikshochchaya | 1 |
| Rigvidhána | 11 |
| Rishyaśṛinga | 14 |
| Kaṇva | 5 |
| Kápardikáriká | 3 |
| Kapila | 2 |
| Káliká | 16 |
| Kalpataru | 30 |
| Karkabháshya | 2 |
| Karkáchárya | 7 |
| Karmapradípa | 1 |
| Karmopadeśiní | 1 |
| Kaśyapa | 10 |
| Káthakagṛihya | 4 |
| Kátyáyana | 100 |
| Kátyánasútra | 6 |
| Kámadhenu | 6 |

| | No. of References. |
|---|---|
| Kámarúpanibandha | 1 |
| Kámika | 1 |
| Káriká | 7 |
| Kártikamáhátmya | 5 |
| Káraṇatantra | 1 |
| Kárshṇájini | 23 |
| Kálavidhána | 2 |
| Kálakaumudí | 1 |
| Kálaviveka | 1 |
| Káládarśa | 58 |
| Kálikápuráṇa | 17 |
| Kálottara | 2 |
| Káśíkhaṇḍa | 16 |
| Keśavasvámin | 3 |
| Kaideva | 2 |
| Kauṇḍinya | 3 |
| Kaurma | 47 |
| Kratu | 6 |
| Kriyáśára | 3 |
| Kriyánibandha | 12 |
| Gabhasti | 1 |
| Garga | 38 |
| Gáruda | 26 |
| Gárgya | 18 |
| Gálava | 16 |
| Gurjaras | 1 |
| Gṛihyakáriká | 10 |
| Gṛihyapariśishṭa | 12 |
| Gṛihyasútra | 1 |
| Gṛihyasangraha | 1 |
| Gobhila | 30 |
| Govindárṇava | 1 |
| Gaudas | 54 |
| Gáudanibandha | 11 |
| Gaudárvuncha | 1 |
| Gaudamaithila | 2 |
| Gautama | 37 |
| Gautamayákhyá | 2 |
| Gautamitantra | 1 |
| Chaṇḍeśvara | 8 |
| Chaturvimśatimata | 14 |
| Chandrakaliká | 1 |
| Chandraprakáśa | 2 |
| Chandriká | 38 |
| Chandrodaya | 1 |
| Chamatkárakhaṇḍa | 1 |
| Chamatkárachintámaṇi | 1 |
| Chintámaṇi | 1 |
| Chyavana | 2 |

bhaṭṭa instead of Anantadeva as the author of the Samskárakaustubha is invariably called, and this is apt to mislead the reader in the first instance.

Dattaka Siddhántamañjarí.
Dattaka-tilaka.
Dattaka-Bhúshaṇa.
Dattaka Chandrika of Gangádeva Vájapeyin.
Dattaka Mímámsá of Vidyáraṇya
Dattaka Dípaka.
Dattaka Kaustubha.
Nánda Pandita'sComments on Paráśara.
Paraśuráma Mádhava.
Paraśuráma Pratápa
Manvartha Chandriká.
Varadarájíya.
Viváda táṇḍeva.
Vyavahára Kaustubha
Vyavasthá Darpaṇa.
Vyavahára Kalá of Bhavadeva.
Sarasvatí Vilása.
Smṛiti Samuchchaya.

| | No. of References. |
|---|---|
| Chhandoga | 1 |
| Chhandogapariśishṭa | 34 |
| Chhágaleya | 9 |
| Janaka | 1 |
| Jamadagni | 2 |
| Jayanta | 2 |
| Jayárnava | 1 |
| Játúkarnya | 14 |
| Jábálaśruti | 5 |
| Jábáli | 23 |
| Jímútavâhana | 1 |
| Jaimini | 3 |
| Jñánárṇava | 1 |
| Jyotirgarga | 3 |
| Jyotirnárada | 1 |
| Jyotirnibandha | 42 |
| Jyotishparáśara | 1 |
| Jyotishprakáśa | 5 |
| Jyotirvivaraṇa | 1 |
| Jyotihśástra | 8 |
| Jyotisha | 10 |
| Jyotihságara | 3 |
| Jyotihsára | 1 |
| Jyotihsiddhánta | 1 |
| Jyotishṭattva | 1 |
| Todaránanda | 5 |
| Dámaratantra | 1 |
| Tatvachintámaṇi | 1 |
| Tattvasára | 1 |
| Tantraratna | 8 |
| Táryasaukhya | 1 |
| Tithitattva | 18 |
| Tírthakhaṇḍa | 1 |
| Taittiríyaśruti | 1 |
| Trikándamaṇḍana | 14 |
| Trivikrama | 1 |
| Tristhalísetu | 22 |
| Trimśatślokí | 2 |
| Daksha | 12 |
| Dattátreya | 3 |
| Daśaślokí | 1 |
| Dákshinátya | 11 |
| Dánadharma | 1 |
| Divodásíya | 43 |
| Dípiká | 40 |
| Durgábhakti-taraṅgiṇí | 5 |
| Durgotsava | 1 |
| Devajániya | 6 |
| Devayájnika | 16 |
| Devala | 68 |
| Devasvámin | 1 |
| Devípuráṇa | 40 |
| Deśáchara | 2 |
| Daivajña | 1 |
| Daivajñamanohara | 1 |
| Daivajñavallabha | 1 |
| Dráhyáyaṇasútra | 1 |
| Dvárakámáhátmya | 1 |
| Dharmapradípa | 6 |
| Dhavalanibandha | 3 |
| Dhanurvidyádípika | 1 |
| Dhúrtasvámin | 3 |

| | No. of References. |
|---|---|
| Dhaumya | 3 |
| Nandipuráṇa | 5 |
| Nágarakhaṇḍa | 14 |
| Nárada | 85 |
| Náradasaṁhitá | 1 |
| Náradíya | 26 |
| Náráyaṇa | 3 |
| Náráyaṇávritti | 16 |
| Nigama | 9 |
| Nirṇayadípa | 1 |
| Nirṇayadípiká | 1 |
| Nirṇayámṛita | 58 |
| Nṛisimha | 4 |
| Nṛisimhaparicharyá | 2 |
| Nṛisimhapuráṇa | 3 |
| Nṛisimhíya | 1 |
| Nṛisimhaprasáda | 1 |
| Panchatantra | 2 |
| Padárthádarsá | 5 |
| Paráśara | 24 |
| Paráśaramádhavíya | 13 |
| Pariśishṭa | 6 |
| Páṇinismṛiti | 1 |
| Padma | 72 |
| Páraskara | 13 |
| Párijáta | 27 |
| Párthasárathi | 1 |
| Pitámaha | 2 |
| Pitámahacharaṇa | 4 |
| Pitṛicharaṇa | 2 |
| Puraścharaṇa-chandriká | 1 |
| Puráṇasamuchchaya | 10 |
| Puráṇántara | 1 |
| Pulastya | 7 |
| Pushkarapuráṇa | 2 |
| Pṛithvíchandriká | 1 |
| Prithvichandrodaya | 177 |
| Paiṭhínasi | 27 |
| Prachetas | 36 |
| Prajápati | 10 |
| Pratápamártaṇḍa | 1 |
| Prabhásakhaṇḍa | 15 |
| Prayágasetu | 1 |
| Prayogapárijáta | 55 |
| Prayogaratna | 7 |
| Pravaradarpaṇa | 3 |
| Pravaramañjarí | 4 |
| Práchínagaṇḍa | 1 |
| Práchya | 2 |
| Práyaschittaratna | 1 |
| Bahvrichakáriká | 1 |
| Bahvrichabháshyakára | 2 |
| Bahvrichaparisíshṭa | 19 |
| Bahvṛichaśruti | 1 |
| Bádaráyaṇa | 2 |
| Brihachchhaunaka | 1 |
| Brihatparáśara | 6 |
| Brihatprachetas | 1 |
| Bṛihadgárgya | 1 |
| Bṛihannáradíya | 24 |
| Bṛihanmanu | 6 |
| Bṛihadyama | 3 |

| | No. of References. |
|---|---|
| Brihadvishṇu | 1 |
| Bṛihaspati | 60 |
| Baijavápa | 10 |
| Baijavápagrihya | 1 |
| Bopadeva | 21 |
| Baudháyana | 54 |
| Baudhayaniya | 14 |
| Brahmagarbha | 1 |
| Brahmayamala | 3 |
| Brahmavaivarta | 29 |
| Brahmasidhhánta | 3 |
| Brahmánḍa | 17 |
| Bráhma | 150 |
| Bhaṭṭa | 18 |
| Bhaṭṭakritántyeshṭi-paddhati | 3 |
| Bhaṭṭakáriká | 1 |
| Bhaṭṭasomeśvara | 3 |
| Bharadvája | 7 |
| Bharadvájagrihya | 1 |
| Bhavishya | 144 |
| Bhavishyottara | 6 |
| Bhalláṭa | 1 |
| Bhágavata | 4 |
| Bhárata | 31 |
| Bhárgava | 2 |
| Bhárgavárchana | 1 |
| Bhárgavárchanadípiká | 13 |
| Bháshyakáramata | 1 |
| Bháshyárthasaṅgrahakára | 1 |
| Bhṛigu | 18 |
| Matsyasúkta | 1 |
| Madanapárijatá | 40 |
| Madanaratna | 220 |
| Manu | 107 |
| Manutíká | 1 |
| Mantramuktávalí | 1 |
| Mantraśástra | 1 |
| Mayúrachitra | 1 |
| Maríchi | 45 |
| Mahábháshya | 1 |
| Mahárnava | 1 |
| Mahopanishad | 1 |
| Máṇḍavya | 2 |
| Mátṛidattíya | 1 |
| Mátsya | 61 |
| Mádhava | 140 |
| Mádhavíya | 61 |
| Mánavasútra | 1 |
| Mámsamímámsá | 1 |
| Márkaṇḍeya | 29 |
| Markaṇḍeyapuráṇa | 20 |
| Mitákshará | 36 |
| Mihira | 1 |
| Miśrokti | 1 |
| Muhúrtadípika | 3 |
| Medhátithi | 16 |
| Maitráyaníyapariśishṭa | 6 |
| Maitreyasútra | 1 |
| Maithila | 9 |
| Mohachullottara | 1 |
| Mokshadharma | 1 |
| Yajñapárśva | 7 |
| Yama | 59 |
| Yáska | 1 |
| Yájñavalkya | 78 |
| Yájnika | 2 |
| Yoginítantra | 1 |
| Yogiyájnavalkya | 2 |
| Ratnakośa | 3 |
| Ratnákara | 6 |
| Ratnávalí | 5 |
| Ratnamálá | 10 |
| Ratnasaṅgraha | 2 |
| Ratnaságara | 1 |
| Rahasya | 1 |
| Rághavabhaṭṭi | 1 |
| Rájamártaṇḍa | 10 |
| Rájadharma | 11 |
| Rámakṛishnabhaṭṭa | 3 |
| Rámakautuka | 1 |
| Rámavájapeyin | 1 |
| Rámaṇḍara | 5 |
| Rámáyaṇa | 2 |
| Rámárchanachandriká | 6 |
| Rudradattiyavyákhyá | 1 |
| Rudradhara | 1 |
| Rudrapaddhati | 1 |
| Rudrayámala | 12 |
| Rúpanáráyaṇa | 5 |
| Renukákáriká | 2 |
| Lakshaṇasamuchchaya | 1 |
| Laghunárṇadiya | 3 |
| Laghubrahmavaivarta | 1 |
| Laghuvishṇu | 1 |
| Laghuhárita | 13 |
| Lalla | 9 |
| Lághava | 1 |
| Likhita | 1 |
| Liṅga | 12 |
| Laugakshi | 28 |
| Vatsa | 2 |
| Varáha | 9 |
| Vardhamána | 7 |
| Vasishtha | 64 |
| Vasishthasamhitá | 3 |
| Vahnipuráṇa | 3 |
| Váchaspati | 13 |
| Váchaspatimiśra | 2 |
| Váraha | 29 |
| Váráhítantra | 2 |
| Vártika | 2 |
| Vámanapuráṇa | 4 |
| Vásishtha | 1 |
| Vátupradípa | 1 |
| Vástuśástra | 3 |
| Váyavíya | 29 |
| Vidhánakhaṇḍa | 1 |
| Vidhánamálá | 1 |
| Vidhavádharma | 1 |
| Vishṇudharma | 50 |
| Vishṇudharmottara | 5 |
| Vishṇupuráṇa | 14 |
| Vishṇu | 80 |
| Viśvaprakáśá | 4 |
| Viśvarupanibandha | 3 |
| Viśvádarsa | 1 |

| | No. of References. |
|---|---|
| Viśvádarsatika | 1 |
| Viśvámitra | 3 |
| Vivasvat | 1 |
| Vishṇurahasya | 10 |
| Vṛittikrinnáráyaṇa | 3 |
| Vṛiddháh | 1 |
| Vṛiddha-gárya | 9 |
| Vṛiddha-Gautama | 3 |
| Vṛiddha-Paráśara | 17 |
| Vṛiddha-Manu | 32 |
| Vṛiddha-Yájñavalkya | 4 |
| Vṛiddha-Vasishṭha | 21 |
| Vṛiddhátri | 3 |
| Vijñáneśvara | 40 |
| Vaikhánasa | 2 |
| Vyavahárátattva | 3 |
| Vyavaháranirṇaya | 1 |
| Vyavahárasamuchchaya | 1 |
| Vyavahárochchaya | 1 |
| Vyághra | 11 |
| Vyághrapáda | 6 |
| Vyása | 78 |
| Vrata-hemádri | 2 |
| Śaíkha | 51 |
| Śaṅkhadhara | 1 |
| Śatapathaśrutí | 5 |
| Śaṇkha Likhita | 5 |
| Śambarácharya | 1 |
| Śambhu | 1 |
| Śakaṭayana | 1 |
| Śaṅkháyana-pariśishṭa | 1 |
| Śátátapa | 30 |
| Śántiratna | 2 |
| Śántisarvasva | 1 |
| Śáṭhyayana | 5 |
| Śárṅgadhara | 2 |
| Śálankayana | 2 |
| Śánkhayanasútra | 1 |
| Śingabhaṭṭíya | 1 |
| Śiva-dharma | 2 |
| Śiva-puráṇa | 1 |
| Śiva-rahasya | 5 |
| Śiva-sarvasva | 1 |
| Śivárchana Chandriká | 1 |
| Śuddhichintámaṇi | 2 |
| Śuddhitatva | 37 |
| Śuddhidípa | 3 |
| Śuddhiprakáśa | 1 |
| Śuddhiratnákara | 2 |
| Śuddhiviveka | 8 |
| Śúlapáṇi | 43 |
| Śaivágama | 1 |
| Saunaka | 38 |
| Śraddhakaliká | 3 |
| Śraddhakaumudí | 9 |

| | No. of References. | |
|---|---|---|
| Śráḍḍhachaṇḍriká | 1 | |
| Śráddhachintámaṇi | 4 | |
| Śráddhatattva | 1 | |
| Śráddhadípakaliká | 8 | |
| Śráddhaprakára | 1 | |
| Śráddhaśulapaṇi | 1 | |
| Śráddha-hemádri | 1 | |
| Śráddhaviveka | 2 | 10 |
| Śridattopadhyáya | 4 | |
| Śrídhara | 1 | |
| Śrídharasvámin | 2 | |
| Śrídharíya | 9 | |
| Srípati | 5 | |
| Śruti | 1 | |
| Śrutiságara | 1 | |
| Ślokagautama | 2 | |
| Shaṭrimśanmata | 17 | |
| Shaḍgurubháshya | 1 | 20 |
| Shaḍguruśishya | 1 | |
| Shaḍaśitimata | 14 | |
| Samhitápradípa | 1 | |
| Samvarta | 12 | |
| Samayoddyota | 1 | |
| Saṇgraha | 45 | |
| Satyavrata | 7 | |
| Satyatapas | 1 | |
| Satyáshádha | 4 | |
| Samvatsarapradipa | 1 | 30 |
| Samhitá-pradípa | 1 | |
| Saptarshi-tmata | 1 | |
| Sanatkumárasamhitá | 1 | |
| Sanatkumára | 1 | |
| Sannyásapaddhati | 1 | |
| Sahyádrikhaṇḍa | 1 | |
| Sambandhatattva | 6 | |
| Sarvajñánáráyaṇa | 1 | |
| Sambandhaviveka | 2 | |
| Sápiṇḍyadípika | 2 | 40 |
| Sápiṇḍyamimámsá | 2 | |
| Ságara | 1 | |
| Sáṅkyáyana | 1 | |
| Sáyaniya | 1 | |
| Sárávalí | 1 | |
| Singábhatti | 1 | |
| Siddhántaśiromaṇi | 1 | |
| Siddhántaśekhara | 3 | |
| Sumantu | 30 | |
| Sureśvara | 1 | 50 |
| Sudarsánabháshya | 11 | |
| Súta | 1 | |
| Súryáruṇasanváda | 1 | |
| Setumáhátmya | 1 | |
| Saurapuráṇa | 7 | |
| Sauradharma | 2 | |
| Skandah | 1 | |
| Skánda | 126 | |
| Smṛityarthasára | 62 | |
| Smṛitisamuchchaya | 3 | 60 |
| Smṛititatva | 5 | |
| Smṛitisára | 5 | |

| | No. of References. | | No. of References. |
|---|---|---|---|
| Smṛitidarpaṇa | 7 | Haradatta | 15 |
| Smṛitichandriká | 12 | Haranátha | 2 |
| Smṛitiratnávalí | 7 | Harivamśa | 1 |
| Smṛitimahárṇava | 1 | Harihara | 4 |
| Smṛityantara | 25 | Haláyudha | 4 |
| Smṛitisaṅgraha | 18 | Háralatá | 13 |
| Smṛitisárávalí | 1 | Háríta | 60 |
| Smṛiti | 12 | Hiraṇyaketu | 1 |
| Smṛitikaumudí | 1 | Hiraṇyakeśisútra | 1 |
| Smártagauda | 4 | Hemádri | 510 |
| Hayaśírshapañcharátí | 2 | | |

These may be roughly classified as under:—

| | |
|---|---|
| Śrauta works | 13 |
| Smṛiti | 131 |
| Puráṇa | 68 |
| Miscellaneous, including Bháshyas, Tikás, Nibandhas, &c. | 272 |
| Total | 484 |

The Samskárakaustubha of Anantadeva being similarly examined gives results as noted below:—

| | No of References. | | No. of References. |
|---|---|---|---|
| Aṅgiras | 4 | Kárshṇájini | 2 |
| Atri | 3 | Kálavidhana | 3 |
| Atharvaṇa Sruti | 1 | Kulaparampará | 2 |
| Adbhuta Ságara | 2 | Krishṇabhaṭṭiya | 3 |
| Aparárka | 8 | Kaurma | 4 |
| Áchára | 2 | Kratu | 1 |
| Ácháraddyota | 1 | Garga | 15 |
| Áchararatna | 1 | Gargasamhitá | 1 |
| Áchárya | 2 | Gárgya | 8 |
| Áhnikapárijáta | 1 | Gáruḍa | 1 |
| Ápastamba | 8 | Gálava | 1 |
| Ápastambakalpa | 1 | Guru | 2 |
| Ápastambabháshya | 1 | Gṛihyaparisishta | 9 |
| Ápastambasútra | 3 | Gṛihyasútra | 2 |
| Áśvaláyana | 41 | Gobhila | 1 |
| Áśvaláyanagṛihya parisishṭa | 5 | Gautama | 10 |
| Áśvaláyanasútra | 3 | Chaturvimśatimata | 7 |
| Ujjvalá | 2 | Chaṇḍeśvaríya | 1 |
| Usanas | 1 | Chandriká | 2 |
| Rigvidhána | 4 | Chandrodaya | 1 |
| Rishiputrasamhitá | 1 | Chhágaleya | 1 |
| Rishyaśringa | 3 | Chhandoga | 1 |
| Kapilasamhitá | 2 | Chhandogaparisishta | 3 |
| Karka | 2 | Chhandogasutrabhashyakára | 1 |
| Karkopádhyáya | 1 | Jamadagni | 1 |
| Kalpataru | 1 | Jayanta | 20 |
| Kaśyapa | 7 | Jayantakáriká | 3 |
| Katíya | 1 | Játúkarṇya | 1 |
| Kaṭiyagṛihya | 2 | Jáháli | 3 |
| Kátyáyana | 1 | Jaimini | 2 |
| Kápardi | 1 | Jaiminitantra | 1 |
| Káriká | 17 | Jyotirnibandha | 7 |
| Kárikanibandha | 1 | Jyotirvasishtha | 2 |

| | No. of References. |
|---|---|
| Jyotirarṇava | 1 |
| Jyotishprakáśa | 1 |
| Jyotihsástra | 1 |
| Jyotihsagara | 1 |
| Tantraratna | 1 |
| Taittiríyaśruti | 1 |
| Trikáṇḍi | 1 |
| Dakshi | 1 |
| Dattakanirṇaya | 1 |
| Dáksiṇátyáchára | 1 |
| Dípiká | 3 |
| Devatáta | 3 |
| Devarára | 2 |
| Devala | 2 |
| Deśácharatovyavasthá | 1 |
| Daivajñamanohara | 1 |
| Dharmapravṛtti | 1 |
| Dharmapraśna | 2 |
| Dhaumya | 1 |
| Nárasiṁha | 1 |
| Narada | 18 |
| Náráyaṇa | 4 |
| Náráyaṇiyaghatiká | 1 |
| Nirṇayámṛita | 3 |
| Nrisimha | 4 |
| Nyáyasudhá | 3 |
| Parárka | 1 |
| Paráśara | 9 |
| Paráśarmádhaviya | 1 |
| Parisishṭa | 31 |
| Pá ma | 3 |
| Páraskara | 2 |
| Páráśaryapráyaschittakáṇḍa | 1 |
| Párijáta | 71 |
| Pitámaha | 1 |
| Pulastya | 1 |
| Paṭhínasi | 7 |
| Puráṇa | 1 |
| Prachetas | 2 |
| Prajápati | 1 |
| Prayogapárijáta | 1 |
| Prayogaratna | 2 |
| Práyaschittoddyota | 1 |
| Bahvṛichakáriká | 1 |
| Bahvṛichapariśishṭa | 3 |
| Baudhasmṛiti | 2 |
| Bajavápa | 1 |
| Baudháyana | 22 |
| Baudhayanasútra | 9 |
| Bṛihatparáśara | 2 |
| Bṛihaspati | 33 |
| Brahmapurana | 7 |
| Brahmayámala | 1 |
| Brahmáṇḍa | 1 |
| Bhagavat | 3 |
| Bhagavatsmṛiti | 1 |
| Bhaṭṭah | 1 |
| Bhaṭṭapadah | 1 |
| Bhavadeva | 2 |
| Bhavishya | 9 |
| Bhágavata | 1 |
| Bháratavaiṛaṭaparvan | 1 |
| Bháradvája | 5 |

| | No. of References. |
|---|---|
| Bhárgava | 2 |
| Bháruchi | 1 |
| Bháshyakára | 7 |
| Bhíshmaparvan | 1 |
| Bhrigu | 2 |
| Matsyapuráṇa | 4 |
| Madanapárijáta | 8 |
| Madanaratna | 26 |
| Manu | 28 |
| Maríchi | 2 |
| Maharshi | 1 |
| Mahábhárata | 1 |
| Mahábháshya | 1 |
| Mahárṇava | 13 |
| Maheśvara | 1 |
| Máṇḍavya | 1 |
| Mátridatta | 3 |
| Mádhaviya | 25 |
| Mánavasamhitá | 1 |
| Márkaṇḍeyah | 1 |
| Márkaṇḍeyapuráṇa | 3 |
| Mitákshará | 10 |
| Mihira | 2 |
| Muhúrtatattva | 1 |
| Muhúrtasangraha | 4 |
| Medhátithi | 6 |
| Maitráyaṇiyaparisishṭa | 1 |
| Mausala | 1 |
| Yájñapársva | 1 |
| Yama | 4 |
| Yájñavalkya | 24 |
| Yogiśvara | 1 |
| Ratnávali | 1 |
| Rájamártaṇḍa | 11 |
| Renukákáriká | 1 |
| Laghuhárita | 1 |
| Lalla | 3 |
| Lainga | 3 |
| Langákshi | 3 |
| Vasishṭha | 38 |
| Vasishṭhasamhitá | 1 |
| Vahnipuráṇa | 1 |
| Vátsya | 1 |
| Váyupuráṇa | 2 |
| Vijñáneśvara | 4 |
| Vidyáraṇyabháshya | 1 |
| Vidhánamála | 3 |
| Vishṇudharma | 4 |
| Vishṇudharmottara | 1 |
| Vishṇupuráṇa | 2 |
| Vishṇusmṛiti | 12 |
| Viśvakartṛi | 8 |
| Vṛittakṛit | 23 |
| Vṛiddhah | 2 |
| Vṛiddha-Garga | 7 |
| Vṛiddha-Gargya | 3 |
| Vṛiddha-Gautama | 1 |
| Vṛiddha-Manu | 3 |
| Vṛiddha Yájñavalkya | 1 |
| Vṛiddha-Vasishṭha | 11 |
| Vṛiddha Vishṇu | 1 |
| Vyághra | 2 |
| Vyághrapáda | 1 |

| | No. of References. | | No. of References. |
|---|---|---|---|
| Vyása | 6 | Satyáshádha | 2 |
| Śaṅkha | 3 | Samayoddyota | 2 |
| Śaṅkhalikhita | 1 | Sampradáya | 1 |
| Śákaṭayána | 1 | Samvatsárakaustubha | 1 |
| Śákala | 1 | Samvarta | 1 |
| Śáṅkháyana | 1 | Sánkhyáyanapariśishṭha | 1 |
| Śáṭhyáyani | 3 | Sárasangraha | 1 |
| Śátátapa | 7 | Siddhántabháshya | 2 |
| Śántisarvasva | 1 | Sudarśanabháshya | 6 |
| Śástrántara | 1 | Sumantu | 12 |
| Śishṭáchara | 3 | Skánda | 5 |
| Śúlapáni | 5 | Smṛiti | 5 |
| Śaunaka | 37 | Smṛitichandriká | 5 |
| Śráddhavásishṭha | 1 | Smṛitidípiká | 1 |
| Śríadhariya | 4 | Smṛitimañjari | 1 |
| Śrípati | 1 | Smṛitiratna | 1 |
| Śruti | 2 | Smṛiratnávali | 2 |
| Śrunta | 1 | Smṛityantara | 7 |
| Shaṭtrimśanmata | 6 | Smṛityarthasára | 23 |
| Saṅgraha | 11 | Haradatta | 9 |
| Saṅgrahaśloka | 1 | Harivamśa | 3 |
| Satyavrata | 1 | Harihara | 2 |
| | | Hárita | 9 |
| | | Hiranyakeśisútra | 2 |
| | | Hemádri | 23 |
| | | Holádhikaraṇanyáya | 3 |

The same being classified stand as follows :—

| | |
|---|---|
| Śrauta works ... ... ... ... ... | 5 |
| Smṛiti ... ... ... ... ... ... | 104 |
| Puráṇa (including Tantras and Pancharátras.)... | 28 |
| Miscellaneous (including Bháshyas, Tíkas and Nibandhas) ... ... ... ... ... | 92 |
| Total... | 229 |

In order to find out what works are actually referred to by the Śástris in several parts of this Presidency, I addressed them on the subject, and from their replies the annexed table has been prepared, showing the number of works that are now referred to :—

| | |
|---|---|
| Áchára ratna. | Tithinirṇaya. |
| Áchárárka. | Títhidídhiti. |
| Áchárendu. | Tithikaustubha, Dánakhaṇḍa. |
| Ácharamádhava. | Dánasára. |
| Kanakákara. | Dánamayúkha. |
| Kamalákarabhaṭṭi. | Dánahemádri. |
| Kaustubha. | Dánachandriká. |
| Kálatatvavivechana. | Dánahírávalí. |
| Kálasiddhánta. | Dánakamalákara. |
| Kálanirṇaya. | Dattakachandriká. |
| Káládarśa. | Dattakakaumudí. |
| Kálamádhava. | Dattakamímánsá. |
| Grihyágniságara. | Dattakadarpaṇa. |
| Grihyapariśishṭa. | Dattakabháskara. |
| Chaturvimśatimatavyákhyá. | Dattamanjarí. |
| Chhalári. | Dayakramasangraha. |
| Jáiviveka. | Dáyatatva. |
| Jayasimhakalpataru. | Dinakaroddyta. |
| Dhundhipratápa. | Dharmasindhu. |

Dharmarnava.
Nirṇayasindhu.
Nirṇayasmṛita.
Nirṇayasindhutíká.
Paráśarasmṛiti.
Purushárthachintámaṇi.
Párijáta.
Prayogasára.
Prayogachintámaṇi.
Prayogaratna.
Práyaśchittamuktávalí.
Práyaśchittachandriká.
Práyaśchittenduśekhara.
Práyaśchittamañjari.
Práyachittamayúkha.
Práyaśchittapradípa.
Práyaschittahemádri.
Bhárata.
Bhágavata.
Bhattoídikshíta Áhnika.
Matsyapuráṇa.
Manusmṛiti.
Madanapárijáta.
Mayúkha.
Maheśabhaṭṭi.
Mádhava.
Mitákshará.
Muhúrtamártanda.
Muhúrtamálá.
Yájñavalkyasmṛiti.
Viśveśvarí.
Vijnáneśvara.
Víramitrodaya.
Vratárka.
Vratarája.
Vratakaumudí.
Vratahemádri.
Vyavaháramayúkha.
Vyavahárámádhava.
Śantimayúkha.
Śantikamalákar.
Śantichintámaṇi.
Śantikaustubha.
Śantisára.
Śantiratnákar.
Śúdrakamalákar.
Śráddhahemádri.
Śráddhamayúkha.
Śráddhendueśekhara.
Śráddhaságara.
Śráddhachandriká.
Śráddhapaddhati
Śráddhamañjarí.
Samskárakaustubha.
Samskárabháskara.
Samskáramayúkha.
Samayamayúkha.
Samskáraratnamálá.
Samskárakalpadruma.
Sarvamayúkha.
Smṛitiratnákara.
Smṛitikaustubha.
Smṛitis [generally].
Smṛityarthasára.
Hemádri.

I cannot say that the above list is exhaustive. Many of my references have still remained unanswered. A separate publication would be required to review historically and critically the Dharmaśástra literature of these parts. I offer the present instalment of my labors, with a view to indicate the wants in this direction, so that more enquiries may be made, and greater care and caution exercised in expounding the Hindu law, and describing a particular work or works as authorities often on second-hand information which there are no means of testing.

Thus the Mitákshará of Vijñáneśvara is only one of the commentaries on one of the many Smṛitis. This has not been fully translated. As I have said before, out of this commentary, a small portion, namely, that on 36 verses is all that Colebrooke rendered into English. His translation itself requires revision and examination.[1] The work is one limited in its scope and of a speculative character. It is not like the works of Hemádri and Mádhava, and of the Bhaṭṭas which extend over the whole field of Dharmaśástra, and which are the daily guides

[1] A comparison of four different editions of the Mitákshará, and a cursory examination of Mr. Colebrooke's translation of the 36 verses with comments, have filled a small volume of remarks and corrections.

of the people. Up to the year 1863, when the Śástris were attached to our courts, they used to consult all current works and usages; and yet they would often naturally quote those which were either printed or lithographed, especially those under the orders of Government. Works like the Mitákshará, the Mayúkha, the Víramitrodaya, the Bhágavata, Mana-Smṛiti, and the Dharmá Sindhu and the Nirṇayasindhu, and such like were more often brought into requisition than others, but the currents of popular usage were as a rule kept up by a staff of men, who were displaced on the establishment of the High Courts on grounds which do not appear to me to be sound and sufficient. To say that the Mitákshará or any other similar treatise is decisive of Hindu law is, in my opinion, completely to ignore the history and growth of the Hindu law itself. Again, its sharp division, first into two schools, and now into a larger number, is a pure European idea. The older treatise-writers notice in some instances a division between the opinions of the Eastern and Southern communities; but further than that, there is no warrant for constructing so many schools of law as it is the fashion to call them. The demarcation which is now being attempted is a work of very late growth, in many instances within the last few years. The first Privy Council Judgments divide the Hindu law into the Benares and Gaur or Bengal schools. The more natural divisions would have been the Eastern and the Southern. The Bráhman community itself which follows the Vedas is divided into two groups, each having five sections. All these again are divided into *Sákhás* (branches) which follow their several Satrás. But in the matter of Vyavahára, there is no binding *Vyavahára* work followed by the people who go according to their customs. Hence the observation of Mádhava that Paráśara, including *Vyavahára* in Áchára, laid down that the king should protect the earth by *Dharma*.[1]

[1] The whole passage from *Vyavahára Mádhava* runs as follows :—

अत एव नारदः ॥ मनुः प्रजापतिर्यस्मिन् काले राज्यमबूभुजत् ॥ धर्मैकतानाः पुरुषारतदासन्सत्यवादिनः ॥ तदा न व्यवहारोभूत्र द्वेषो नापि मत्सरः ॥ नहि धर्मे मनुष्येषु व्यवहारः प्रवर्तते इति ॥ बृहस्पतिस्तु द्वेषलोभादिदुष्टस्य व्यवहर्तृत्वमाह । धर्मश्रद्धानाः पुरुषाः पूर्वमासन्नहिंसकाः । लोभद्वेषादिभूतानां व्यवहारः प्रवर्तते ॥ तस्माद्धर्मे विच्छिन्ने सति साध्यसूत्रो न्यायनिर्णयफलो विवादो व्यवहारशब्देन रूढ्याभिधीयते ॥ हारीतेपि रूढिमभिप्रेत्याह ॥ स्वधर्मस्य यथा प्राप्तिः परधर्मस्य वर्जनम् । न्यायेन क्रियते यश्च व्यवहारः स उच्यत इति अत एवाचारकाण्डे व्यवहाराणामन्तर्भावमभिप्रेत्य पराशरः पृथक् व्यवहारकाण्डमकृत्वा क्षितिं धर्मेण पालयेदिति च सूत्रयन्मात्रं व्यवहाराणां कृतवान् । तानेवाच सूचितान् व्यवहारान् वयं स्मृत्यन्तराणि तत्रिबन्धनान्यनुसृत्य यथाशक्ति निरूपयामः ॥ केरलदेशादौ वेश्यागमने साक्षिभिरापादितेपि देशाचारवशान्नायं राज्ञा दण्ड्यते तत्र चरित्रेण व्यवहारस्य बाधः । कर्णाटकदेशे बलान्मातुलसुताविवाहो न दोषाय । केरलदेशे कन्या ऋतुमतीत्रिय दोषाय एवमादितस्तत्तद्देशसमयस्तत्र तत्र पत्राद्देशासनं चावतिष्ठते । माधवव्यवहारे. प. ३ ।

Translation :—In support of the same Nárada says :—At the time when king Manu held sway [over this earth], the men conformed themselves to *Dharma* (duty) alone, and were speakers of truth. At that time there was no Vyavahára (civil justice), for

This in the case of the Hindus pre-eminently means usage or custom. We accordingly find the 12 Mayúkhas and the Mitákshará of Vijñáneśvara to be two out of the many treatises consulted at Poona as treating of such customs. In Khandesh, amongst the works on Vyavahára, they are 2 out of the 5 works named at the time of Mr. Steele. The analysis of the Nirṇayasindhu and Saṁskárakaustubha shows the same thing. So does the list made up from current replies of the Sástris. If we see the actual working of Hindu society, Kamalákara's Nirṇayasindhu and the works of Mádhava and Náráyaṇa and other Bhaṭṭas of Benares, they are more frequently consulted by the people than *Vijñáneśvara*. The reason is clear. The Bhaṭṭas belonged to the people. They headed and still head the community of Benares, where this family enjoyed the privilege of *agra púja* (first worship), and first *gandha* (ground sandalwood) is applied to their foreheads in all Hindu assemblies. They wrote *Nibandhas* for the guidance of the people. These were often founded on old texts; but they likewise incorporated all the accepted usages then current. This was not altogether the case with Vijñáneśvara. He was a very learned writer; and he wrote an excellent commentary on the Yájñavalkya Smṛiti. But apart from that, there was nothing very special about it. And as a matter of fact, it is less consulted than the works of Hemádri, Mádhava and the Bhaṭṭas. Although I do not lay much stress on the following circumstance by itself, still it throws some additional light on the subject; and must therefore be noticed. Subodhiní, which is now thought of so much by some authorities, was known only by its title in Poona in 1820. Even the author's name was not known in Poona, when Steele's Summary

---

there was no hatred nor even jealousy. When *Dharma* dies away from among men *Vyavahára* comes into existence. As for Bṛihaspati, he speaks of hatred, avarice and other vices as being the causes of Vyavahára. "Formerly men conformed themselves to *Dharma* alone, and abstained from slaughter. *Vyavahára* comes into action in the case of those who are degraded by avarice, hatred and the like." *Dharma* (righteousness) having thus disappeared, a dispute which has its origin in a desire to obtain, and resulting in the determination of what is just, is termed *Vyavahára* in common parlance. Hárata too, in reference to the popular use [of the word *Vyavahára*] says:—That is called *Vyavahára*, whereby the fulfilment of one's duty and the avoidance of duties laid down for others, are effected in accordance with justice.

Hence Paraśára wishing to include *Vyavahára* in the chapter on Ácháras has assigned no separate section to *Vyavahára*, and only alludes to it [in the following text]: "Let [a king] protect the earth in accordance with Dharma." We shall expound the *Vyavahára* here alluded to, by referring to other Smṛitis on the subject as far as we can. . . . . In Kerala and other countries cohabitation with prostitutes, though proved by witnesses, is not punished by the king because of the customs of the country. There the Vyavahára is superseded by the custom.

In the Carnatic an intentional marriage with a daughter of a maternal uncle is not treated as an offence. In the country of Kerala, the maturity of a maiden is not treated as an offence. In this and the like manner, in every country, there prevail its own customs, and written commands (of the king).

was published in 1826, (see page 8 of his preface,) whereas the general digest by the same author on *Achára, Vyavahára* and *Práyaschitta,* under the title of Madana Párijáta, is entered as a well-known work.

I shall only give one more example of a similar misapprehension and confusion. This is in regard to the Dattaka Mímánsá of Nanda Paṇḍita and the Dattaka Chandriká of Kubera, miscalled Devándabhaṭṭa. The first is the work of Nanda Paṇḍita of Benares. Mr. Colebrooke calls it "an excellent treatise on adoption."[1] Of the author he says nothing beyond a general remark that biographical notices of all Hindu authors must be "very imperfect."[2] If sufficient enquiry had been made, Nanda Paṇḍita's history could have been easily found. For he belonged to a Benares family, the descendants of which are still living at Benares.[3] Not one of the thirteen works of Nanda Paṇḍita are authority in any part of this Presidency. Indeed, except the first two, the others are not even known. As regards the Dattaka Mímánsá of Nanda Paṇḍita, it was not known at Poona in 1826. A Dattaka Mímánsá is noted in Steele's list as "a work well-known in the Carnatak," the author's name is not given. But there is a Dattaka Mímánsá by Vidyáraṇya Swámí, well-known in the South;[4] a third Dattaka Mímánsá by Śrí-ráma Paṇḍita is also current;[5] a fourth Dattaka Mímánsá by Somanáth is spoken of; but as neither Nanda Paṇḍitá's work, nor Kubera's was in existence in the original[6] in this Presidency when Borradaile's translation of the Vyavahára Mayúkha was printed in 1827, I am entitled in holding that neither work was known to any of the Śástris consulted by Steele: and further that the Mímánsá abovenamed as being known in the Carnatic must have been either Śrírám's or Vidyáraṇya's. Nanda Paṇḍita is nowhere even mentioned as an

[1] Stokes' H. L. B. page 177. [2] Id. page 179.

[3] The founder of the family was Śri Lakshmidhara; he was a resident of Bedar in southern India, whence he went to Benares; from him Nanda Paṇḍita was sixth in descent; and persons belonging to the ninth generation after Nanda Paṇḍita are still flourishing in upper India, from one of whom I have obtained an account of the family through Paṇḍits Rajaram Śastrí Bodas and Bál Śástrí Ránaḍe of Benares. In an old copy of Mádhavánand (a poetical work of Nanda Paṇḍita) which bears notes believed to be in Nanda Paṇḍita's handwriting the year Samvat 1655, (A. C. 1599) is given; and this may be taken to be about the time when he lived. His works are stated to be as follows:—1, Dattaka-Mímánsá; 2, Navarátra Pindipa; 3, Smṛiti Sindhukálanirṇaya; 4, three sections of Harivanśa Vilása, named Dánakantuka, Anhikakantuka, and Sanskárakantuka; 5, Bála-bhushá; 6, Tatva-mukhavali; 7, Madhava Nand Náṭaka; 8, Keśaba-vaijanti; 9, Vidvanmanohara (a commentary on Parášara Smṛiti); 10, Śráddha-kalpalatá; 11, Tirtha-kalpalata; 12, Kálanirnayakantuka; and 13, Káśiprákáśa. His elder brother Govind wrote a work entitled Jyôtisha-Ratnasangraha. No other works are now found. A family tree of the whole family is annexed; and on a future occasion I hope to publish selected biographical extracts concerning this family.

[4] Shamchurn Sircar's Vyavasthá Chandriká, Sanskrit Intro. p 19.

[5] See T. Strange's Hindu Law, vol. 2 p. 101; Strange's Manual, second ed. p. 90.

[6] See p. vi. of the Preface 1st ed.; and page 7 of Stokes' Hindu Law Books.

authority on this subject in the Kaustubha, or the Nirṇayasindhu, or the Dharmasindhu, and the Mayúkhas. While the authorities on which Steele bases his Summary of law as regards adoption are Kaustubha, Mayúkha, Mitákshará, Ádityapuráṇa, Nirṇaysindhu, Mánu, Mahábhárata and Rámayaṇa.[1]

The reader will now be able to see how-far the remark of Mr. Sutherland in 1819, that "the Dattaka Mímámsá is the most celebrated work extant on the Hindu law of adoption" is warranted by facts. In this Presidency it was not even known to the people in original for many years after the publication of its translation under the auspices of Government. And now the people are guided by the Nirṇaysindhu, the Víramitrodaya, the Kaustubha, the Dharmasindhu, the Mayúkhas, and not by the Mímámsá or the Chandriká. There are other works too on the subject of adoption, such as Dattaka-Mañjari, Dattaka-Nirṇaya, Dattaka-Darpaṇa, and others, which are consulted in these parts, but they are not accessible to English readers. The opinions of Nanda Paṇḍita are speculative, and are more indicative of *Gauḍa* doctrines than of the usages or opinions of the South.

As regards the Dattaka Chandriká, it is supposed by Mr. Sutherland to be the work of Devánḍa Bhaṭṭa (see Stokes' H. L. B. p. 629, and Mayne p. 24). Mr. Sutherland states that the printed copy as well as manuscripts read the name of the author as Kubera (see Stokes' H. L. B. p. 662). The ground assigned by him for discrediting this express testimony of manuscripts is the author's describing himself to be the writer of the Smṛiti Chandriká (see Stokes' H. L. B. p. 662 note). But I hold this assumption to be incorrect—I. Because there are more than one Smṛiti Chandriká and by authors other than Devánḍa Bhaṭṭa (see the catalogue of Sanskrit works in the Asiatic Society of Bengal: under the direction of Mr. James Prinsep, A. C. 1838 p. 395;—Dr. Burnell's Catalogue of Tanjore MSS. p. 133; Shamchurn Sircar's Vyavasthá Chandriká, preface p. 19); II. As observed by Babu Shamchurn Sircar, the styles of the Smṛiti Chandriká and the Dattaka Chandriká are different (see Vyavasthá Chandriká vol. I. p. 18 note 58); III. The tradition noted by Shamchurn as prevailing in Bengal is confirmed by the statement of Mr. W. Macnaghten that the Dattaka Chandriká has greater authority in Bengal than anywhere else[2]; IV. Devánanda Bhaṭṭa expressly refers his readers for his observations on adoption to the chapter of his own Smṛiti Chandriká on resumption of gift (see p. 55, ll. 18, 19); V. The citation of the same verse in the two

[1] See pp. 48—55, Steele's Summary, 1st ed.

[2] The statement of Mr. Sutherland that its author was a native of southern India (see Stokes' H. L. B. p. 528) is not of much weight, for according to Mr. Sutherland's information, Nanda Paṇḍita belonged to Southern India, while we know that he was an inhabitant of Benares.

works with different readings, and their reference of identical texts to different authors goes to show that they could not have been the productions of one and the same author (see Dat. Ch. p. 49, l. 17; and Sm. Ch. p. 56, l. 14; Dat. Ch. p. 49, l. 19, and Sm. Ch. p. 56, l. 24). On these grounds I hold that the present Smṛiti Chandriká is, as it professes to be, the work of Bhaṭṭa Kubera, a Bengal author. Kubera's name is not even known on this side of India; and Mr. Borradaile expressly says that the original work did not exist in Western India in his time. Steele's list does not mention such a work at all. Leaving all such speculative and comparatively unknown works, I chose one of the well known modern *Nibhandhas*—namely, the Vyavahára Mayúkha of Bhaṭṭa Nílakaṇṭha of Benares for publication. This work had been translated by Mr. Borradaile. But that version was known to be imperfect. I therefore first settled the Mayúkha text in the mode detailed in Part I, and from the text so settled, I carefully made my translation and have added notes thereto. I have tried to reproduce the original as nearly as possible. A few remarks about Nílakaṇṭha will now be made. Nílakaṇṭha belonged to the great Bhaṭṭa family of Benares. An account of this, prepared for me by Paṇḍit Bál Śástrí of Benares, is given in Part I. I append a translation of it for the information of my readers:—

"In early times, there lived in the city of Paiṭhaṇa a very learned and pious man named Govindabhaṭṭa. His son Rámeśvarabhaṭṭa went to Benares with the view of spending the remainder of his life at that holy place. Here he was initiated into the *Mantra* sacred to Ráma, and passed his life in the service of God Ráma. At an advanced age Rámeśvara got a son named Náráyaṇabhaṭṭa. From his very youth Náráyaṇa was distinguished by his patience and other good qualities; and he practised great austerities. In his time the Mahomedans demolished the temple of God Viśveśvara at Benares. Some time afterwards there was a drought over the whole continent of India. Under these circumstances, the all-powerful Mahomedan ruler of the country begged of Náráyaṇabhaṭṭa to cause the rains to fall. Thereupon he promised a copious fall of rain within the next twenty-four hours, and requested the then ruling Mahomedan authorities to permit him to reconstruct the temple of Viśveśvara. Accordingly there was a general rainfall, and contentment and happiness prevailed throughout the land. The Mahomedan ruler then gave the required permission, and Náráyaṇabhaṭṭa rebuilt the great temple that had been pulled down, and performed the ceremony of founding the image of Śrí Viśveśvara and of sanctifying it. The followers of the Hindu faith were moved with admiration, and having deep respect for his transcendant virtues bestowed on him the title of *Jagat-guru* (teacher of the world), and resolved that Náráyaṇabhaṭṭa and his descendants should thenceforward be entitled to the *Agra puja* [first honour]. This traditional history is well known at Benares to this day. Náráyaṇabhaṭṭa's name is celebrated throughout Hindustan for his erudition in all the Sástras, evidenced by his works, such as the Tristhali-setu, Prayoga-ratna, and others; it is also well known that the preservation of the *Srauta* and *Smarta* rites and ceremonies, as they now subsist, is due in a great measure to his works. The account of the family descent given above occurs in a *Śloka* in Joytishṭomapaddhati, a work written by Rámakrishṇabhaṭṭa, son of Náráyaṇabhaṭṭa:—

श्रीमद्दक्षिणदेशेऽगस्त्य इवासीत्स भट्टगोविन्दः ॥ तत्सूनुः श्रीरामेश्वरभट्टोभूत्स सर्वदिक्ख्यातः ॥ तत्पुत्रः श्रीनारायणभट्टो जयति सूर्यवद्भूमौ ॥ तत्सूनुरामकृष्णभट्टो रामैकशरणतां यातः ॥

Translation :—In the great Southern Country, Bhaṭṭa Govind lived like the *Agastya* star. His son was Bhaṭṭa Rameśvara famed in all directions. His son Náráyaṇabhaṭṭa flourishes like the sun on this earth. His son Ramakṛishṇabhaṭṭa became devoted to the services of the one God Ráma.

The works of Bhaṭṭa Govinda and of his son Rameśvara are not now obtainable; nor can the time in which they lived be fixed with any amount of certainty. Precise information sufficient to fix date of Náráyaṇabhaṭṭa's birth is not available, but the time during which he lived may be approximately determined. With great labor I have collected some works written in Náráyaṇabhaṭṭa's own hand, and one of them is dated in the 1524th year of the Vikrama era. Another contains *Ślokas* (verses) which are to the following effect: —

ऋषिबाणाब्धिभूमाख्ये शके ज्येष्ठसिते रवौ । चतुर्दश्यां विशाखासु ग्रन्थोन्तं समगादयम् ॥ भट्टरामेशपुत्रेण शिवपुर्यां यथामति ॥ लिखितः सप्तमोध्यायो भाष्ये शबरसत्कृतौ ॥

Translation :—In the *Śaka* year 1457, on Sunday the 14th of the dark-half of the month of Jyeshṭá the moon being in the constellation of Visakhá, the work came to its conclusion. The son of Bhaṭṭa Rámeśa [living in the city of Kaśí, *i. e.* Benares] has written the seventh *Adhyaya* [chapter] on the *Bháshya* of Śabara to the best of his ability.

At the end of the 12th chapter of the same manuscript is written *Samvat* 1612 of the Vikrama era. Náráyaṇabhaṭṭa had two sons, Rámakṛishṇabhaṭṭa and Śankarabhaṭṭa. Both wrote numerous treatises, and were great in all branches of learning. Of the treatises written by Rámakṛishṇa, the largest is his commentary on Tantra-Vártika. On the Dharmaśástra he wrote the Jivit-itrika-nirṇaya and many other works. Of the treatises written by Śankarabhaṭṭa the *Dvaita-nirṇaya* is a large and well known work. He also wrote some treatises on various portions of the Mímáṁsá philosophy. The *ślokas* (verses) which establish the time referred to above, and which are found in the *Dvaita-nirṇaya* of Śaṅkarabhaṭṭa, are these :—

वाग्देव्यागतमत्सरां श्रियमयं नित्यानुरक्तोभजम् नो मुञ्चत्रविमुक्तकं विजयत श्रीभट्टनारायणः ॥ विबुधानन्दसंदोहहेतवे तत्तनूद्भवः ॥ मीमांसाद्वैतसाम्राज्यनीतिज्ञो भट्टशंकरः ॥

Free Translation :—Bhaṭṭa Náráyaṇa, endowed with knowledge, and the devotee of Lakshmí flourishes at Benares. His son Bhaṭṭa Śankara, the great Mímáṁsak, followed him.

Śankarabhaṭṭa's son Nílakaṇṭha was a great *Nibandhakára*, and he wrote the Dána Mayúkha, and the other eleven Mayúkhas. Nílakaṇṭha's son Śaṅkara was a great essayist, and his twelve essays known by the title of *Arka* (sun), such as Vratárka and the rest, are well known. Rámakṛishṇabhaṭṭa had three sons—Dinakarabhaṭṭa, Kamalákarabhaṭṭa, and Lakshmaṇabhaṭṭa. Dinakara's productions, the 12 Udyotas, Śántisára, &c. are well known, and in some treatises mention is made of him under the name of Divákarabhaṭṭa, Viśveśvara, otherwise called Gágábhaṭṭa, wrote the Bhaṭṭa Chintámaṇi and many other treatises. Of the productions of Kamalákara the Nirṇayasindhu and many other works are celebrated, and are considered as authorities. Anantabhaṭṭa, son of Kamalákara, wrote the Śriráma Kalpadruma and other works. The Acháraratna and other treatises by Lakshmaṇa are celebrated. Similarly other eminent men learned and virtuous were born in this family; and their fame has spread throughout the land.

Annexed is the genealogical tree showing the names of the several Bhaṭṭas; the word *Śrí* is prefixed to the names of those who were living [on Saturday, Kártika *Vadya 8th*, Samvat 1935, when the tree was prepared for me in Benares]:—

## *The Bhaṭṭa Family of Benares.*

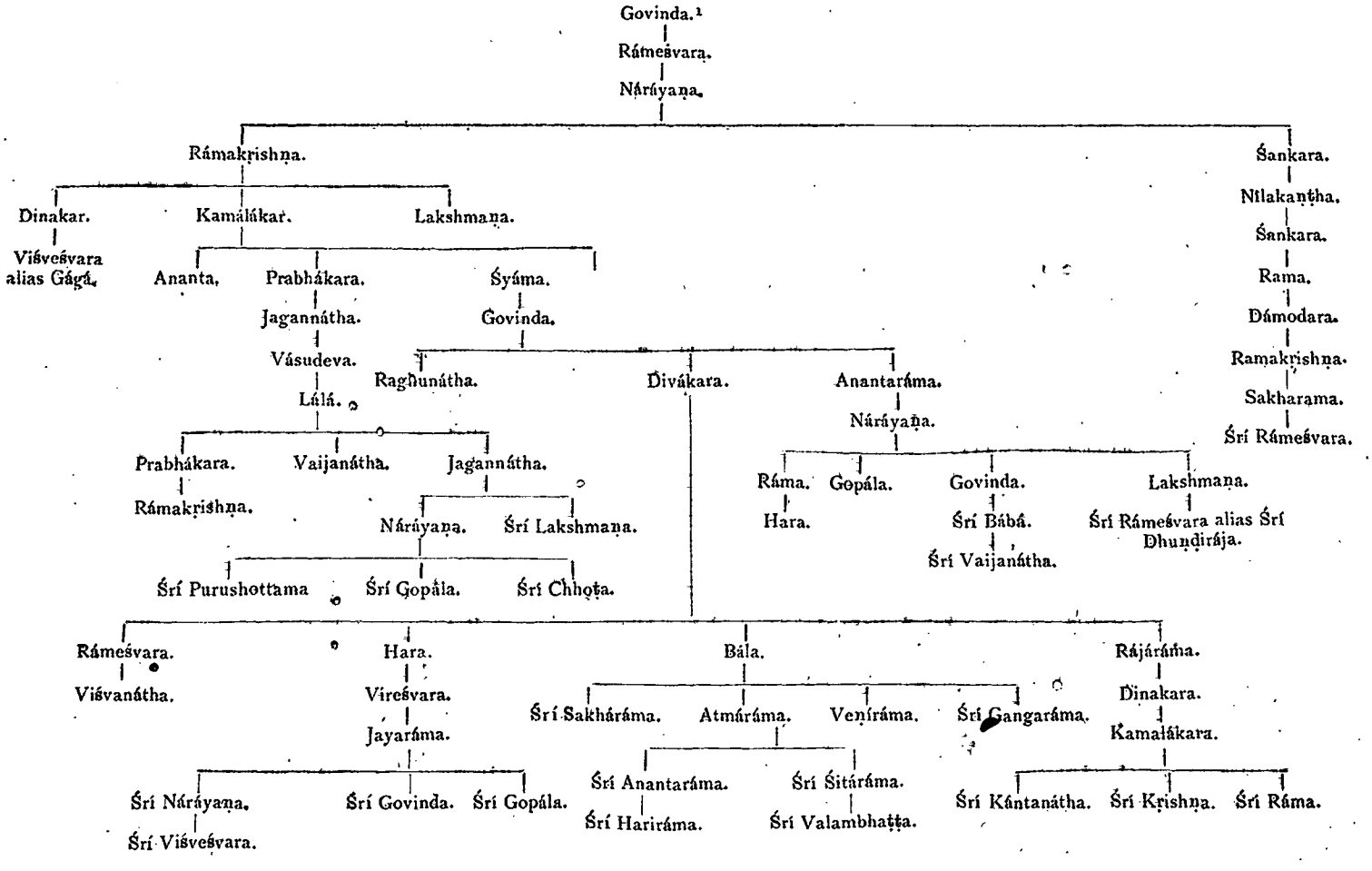

At the commencement of each of the 12 Mayúkhas, there are 14 prefatory verses. These describe the family of Nílakaṇṭha's patron king, and the occasion which produced the Mayúkhas. I give these verses together with a free translation thereof below.[1]

---

[1] Note.—The text of these opening verses is settled by a comparison of three MSS., two Miraj ones, and one from my own collection. It may be noted that the Miraj copy A repeats these verses at the beginning of each Mayúkha, only varying the last stanza, which has special reference to the Mayúkha that follows. In my copy these verses occur at the beginning of the Samskára, Níti, Dána, Pratishṭhá and Práyaschitta Mayúkhas, which are the 1st, 5th, 7th, 9th and 10th out of the twelve. But from the others they have been left out either by carelessness or accident.

यो लीलया संतनुतेऽत्र विश्वं तत्पालयत्यात्मनि विश्वरूपे । लयं नयत्याशु च पूर्णकामः शिवं तनोत्वाशु रविर्ममासौ ॥ १ ॥ जज्ञे पितामहतनोः खलु कश्यपो यस्तस्मादजायत मुनिस्तु विभाण्डकाख्यः । तं पुत्रिणं धुरमरोपयदृष्यशृङ्गस्तस्यान्वयेऽप्यजनि शृङ्गिवराभिधानः ॥ २ ॥ तस्मिन्वंशे महति वितते सङ्गराख्ये नृपाणां राजा कर्णः समजनि यथा सागरे शीतरश्मिः । कीर्त्या यस्य पथिततरया श्रोत्रजाते ऽभिपूर्णे कर्णस्यापि प्रवितततकथा नावकाशं लभन्ते ॥ ३ ॥ विश्वोकाख्यदेवस्ततस्तत्सुतोऽभूद्विशोकीकृता येन सर्वा धरित्री । ततोऽप्यास राजाऽस्तशत्रुस्ततोभूद्रयाख्यो रयेणैव सर्वोहितघ्नः ॥ ४ ॥ बभूवाथ वैराटराजस्ततोऽभून्नृपो मेदिनीवल्लभो वीठराजः । नरब्रह्मदेवस्ततो मन्युदेवस्ततोऽभून्नृपश्चन्द्रपालाभिधानः ॥ ५ ॥ शिवगणाख्यनृपः समजन्यथो शिवगणाख्यपुरं प्रचकार यः । शिवगणेन समः सकलैर्गुणैः शिवशिवप्रथमो गणनासु यः ॥ ६ ॥ रोलिचन्द्र इति तत्तनयोऽभूत्कर्मसेननृपतिस्तमथानु । लोकपोनरहरिर्नृपराजो रामचन्द्र इति तत्तनुजातः ॥ ७ ॥ यशोदेवस्ततो जातस्ताराचन्द्रनृपस्ततः । चक्रसेनस्ततो राजा राजसिंहनृपो यतः ॥ ८ ॥ ततोऽप्यभूद्भूपतिसाहिदेवः स्वकीर्तिभिर्निर्जितदुग्धसिन्धुः । अभूत्ततः श्रीभगवन्तदेवः सदैर्वे भाग्योदयवान् क्षितीशः ॥ ९ ॥ यद्दानद्रविणाद्रिनिर्जितवपूरत्नाचलो लज्जया दूरे स्तब्ध इलावृते निविशते नो यत्र पुंसां गतिः । किंच यस्यदरातिवामनयनानेत्राम्बुभिर्वर्धितस्तेजोऽग्निर्वडवामुखोत्थहुतभुक्कुल्यः कथं नो भवेत् ॥ १० ॥ आज्ञप्तस्तेन राज्ञा विबुधकुलमणिर्दाक्षिणात्यावतंसो भट्टः श्रीनीलकण्ठः स्मृतिषु दृढमतिर्जैमिनीयेऽद्वितीयः । आज्ञामादाय मूर्ध्ना सविनयमनुना तस्य सर्वात्रिबन्धान्दृष्ट्वा सम्यग्विविच्यात्र जगति भगवद्भास्करस्तन्यतेऽयम् ॥ ११ ॥ (च्य प्रवितताकिरणस्तन्यते भास्करोयम् in the last quarter in the two Miraj copies). प्रतारकैरावृतमत्र किंचिन्मया तु निर्मूलतया तदुज्झितम् । ऊनोक्तितातो न हि तेन काचित्खपुष्पहीनापचितिर्न हीयते ॥ १२ ॥ संस्काराचारकालाः समुचितरचनाः श्राद्धनीती विवादो दानोत्सर्गप्रतिष्ठा जगति जयकराः संगतार्थानुबद्धाः । प्रायश्चित्तं विशुद्धिस्तदनु निगदिता शान्तिरेवं क्रमेण ख्याता ग्रन्थेऽत्र शुद्धे बुधजनसुखदा द्वादशैते मयूखाः ॥ १३ ॥ भगवन्तभास्कराख्ये ग्रन्थेऽस्मिञ्छिष्टसम्मते च ततः । व्यवहारविधिमयूखः प्रतन्यते नीलकण्ठेन ॥ १४ ॥

Translation :—[1.] May that sun do good to me, who sportively creates the universe, who protects it [while subsisting] in his universal form, and who speedily terminates it when his desire [for sport] has been satisfied.

[2.] Of Kaśyapa who was born of the body of Brahmá, was born the sage [known by] the name of Vibhaṇḍaka. Him Ṛishyaśṛinga placed at the head of fathers [by his birth as son], and in his line was born he who was named Śṛingivara.

[3.] In that great and long line of kings called Sangara, king Karṇa was born as the moon was from the ocean. His reputation was so widely known that even the stories of Karṇa (a hero of the Mahábhárata) could find no room in [*i.e.* attract] the ears [of people] which were filled to the brim [by stories of king Karṇa].

[4.] From him was born Viśoka Deva, who [as his name imported] made the world free from misery. From him was born Astaśatru. He had a son named Raya, who [as his name implied] destroyed all his enemies simply by the rapidity of his motion.

[5.] Then was born king Vairáṭa, and after him king Víṭharája, [and] Narabrahmadeva, and after him Manyudeva; and after him the king named Chandrapála.

The Sengara dynasty (under whose auspices Nílakaṇṭha wrote,) flourished in Bundel-Khaṇḍa. Their capital appears to have been situated in Bharehá at the confluence of चर्मण्वती (the Chambalá) and वराणिजा (the Yamuná).[1]

In the Introduction as well as in the Appendices, a number of subjects have been left unnoticed. Some of these are noted in the concluding observations at the end of Appendix IV. Section II.

I cannot conclude this Introduction without acknowledging my great obligations to my friends Paṇḍita Bál Śástrí Ránade of Benares and Paṇḍit Rájárám Śástrí Bodas also of Benares, now employed at the Elphinstone College, Mr. Yasavant V. Athalye, one of my brother

---

[6.] The king named Śivagana was then born, who founded the city named Śivagana; who was equal to Śivagana (the attendants of Śiva) in respect of all qualities, and who was the first in the enumeration of those who were favoured by Śiva.

[7.] He had a son named Rolichandra, who was followed by king Karmasena. From his body was born Rámachandra, who was the protector of the world, the lion among men, and king of kings.

[8.] After him was born Yaśodeva; after him king Táráchandra; after him king Chakrasena, and after him king Rájasimha.

[9.] From him was born king Sáhideva, whose reputation surpassed the ocean of milk [in respect of its freedom from stain]. After him was born King Bhagavanta Deva, who had constant and increasing prosperity.

[10.] The heap of wealth given by him was so great that the mountain of gems being, as it were, surpassed thereby in respect of its size, was ashamed, and quietly retired to Ilávṛita, a place where no men can go; further, how can the fire of his prowess, which was inflamed by the tears of the wives of the terror-stricken enemy, not be likened to the fire which arose out of the mouth of Vaḍavá, and which residing in the ocean is supposed to feed on its waters.

[11.] That king gave a command to Nílakaṇṭha, the gem of the assemblage of learned men, the ornament of the residents of the Deccan, who was firmly grounded in Smṛitis, and who had no equal [in the Púrva Mímámsa] of Jaimini [Nílakaṇṭha] courteously bowing to that command read and examined all the works, and is now laying before the world this Bhagavadbháskara.

[12.] Herein I have discarded much that was accepted by [literary] cheats, but had really no foundation. There is however no deficiency of discourse on that account; for no worship is lowered for want of an imaginary flower.

[13.] In this unblemished work, twelve *Mayúkhas* (rays), which give delight to learned men, are propounded in the following order:—*Samskára* (initiatory ceremonies), *Áchára* (rules of conduct), *kála* [ordinarily called *Samáya*] (the times for festivals and religious acts), *Śráddha* (funeral oblation), *Níti* (policy), *Viváda* [ordinarily called *Vyavahára*] (Municipal law), *dána* (gifts), *Utsarga* (dedication), *pratisṭhá* (consecration), *práyaśchita* (penance); *Śaddhi* (purification), and *Śánti* (propitiation of enraged deities).

[14.] In this work called Bhagavanta Bháskara, which is respected by the learned, the Vyavahára Mayúkha is now being propounded by Nílakaṇṭha.

[1] About the position of Bharehá, the principal town of the Auraya district, see Atkinson's Gazetteer of the N. W. Provinces vol. IV., p. 417. About the Raja who first brought the Bráhmaṇas, see the same volume p. 413. As regards the sage Ṛishya-Śringa to whom the Rajas trace their descent, see vol. I. p. 209 and vol. IV. p. 276.

Pleaders, and Mr. John Macpherson, of the High Court bar, for their assistance in my work. Many Śástris throughout the Presidency are also entitled to my acknowledgments for their readiness in giving me information, and placing their MS. stores at my disposal. Thirteen years ago I wrote a small work on Hindu Law in the Maráthí language. Its reception has encouraged me to extend the sphere of my labours. Of the imperfections of this my first attempt to trace the history of the Áryan law, and to treat of some of its prominent topics historically, no one can be more conscious than myself. But if it contributes in the slightest degree to ampler investigation or more sympathetic study of the Dharmaśástra, I shall consider myself well rewarded.

VISHVANÁTH NÁRÁYAN MANDLIK.

*Bombay, the Hermitage,*
*the 10th March* 1880.

TABLE OF SMRITIS referred to at page xiv. of the Introduction.

| | Alphabetical List of Smṛitis. | West and Bühler, 1st ed. (pp. xiii-xvi). | Borradaile's Vyávahára Mayúkha Preface. | Hindu Law by Röer and Montriou. |
|---|---|---|---|---|
| | आग्नि Agni | 1 | 1 | 1 |
| | आङ्गिरस् Aṅgiras | 1 | 1 | 1 |
| | आङ्गिरस् (मध्यम) Aṅgiras (Madhyama) | 1 | 1 | 1 |
| | आङ्गिरस् (बृहत्) Aṅgiras (Bṛihat) | 1 | 1 | 1 |
| 10 | आत्रि Atri | 1 | 1 | 1 |
| | आत्रेय Atreya | 1 | ... | ... |
| | आपस्तम्ब Ápastamba | ... | 1 | 1 |
| | आपस्तम्ब (गद्यमय) Ápastamba (prose) | 1 | ... | ... |
| | आपस्तम्ब (पद्यमय) Ápastamba (verse) | 1 | ... | ... |
| | आश्वलायन Áśvaláyana | 1 | ... | ... |
| | उशनस् Uśanas | 1 | 1 | 1 |
| | ऋष्यशृङ्ग Ṛishyaśṛinga | 1 | 1 | 1 |
| | औपजन्धनि Aupajandhani | 1 | ... | ... |
| | कण्व Kaṇva | 1 | 1 | ... |
| 20 | कश्यप Kaśyapa | 1 | 1 | 1 |
| | कापिल Kapila | 1 | ... | ... |
| | काण्व Káṇva | 1 | ... | ... |
| | कात्यायन Kátyáyana | 1 | 1 | 1 |
| | कात्यायन (वृद्ध) Kátyáyana (old) | 1 | 1 | ... |
| | कात्यायन (कर्मप्रदीप) Kátyáyana (Karma-pradípa) | 1 | ... | ... |
| | कार्ष्णाजिनि Kárshṇajini | 1 | ... | ... |
| | कुथुमि Kuthumi | 1 | 1 | 1 |
| | कुत्स Kutsa | 1 | ... | ... |
| 30 | कृष्णाजिनि Kṛishṇajini | 1 | ... | ... |
| | कौत्स Kautsa | 1 | ... | ... |
| | गार्ग्य Gárgya | 1 | 1 | 1 |
| | गौतम Gautama | 1 | 1 | 1 |
| | गौतम (गद्यमय) Gautama (prose) | 1 | ... | ... |
| | गौतम (पद्यमय) Gautama (verse) | 1 | ... | ... |
| | गौतम (वृद्ध) Gautama (old) | 1 | 1 | ... |
| | चिदम्बर Chidambara | 1 | 1 | ... |
| | च्यवन Chyavana | 1 | 1 | 1 |
| | छागलेय Chhágaleya | 1 | 1 | 1 |
| 40 | जमदग्नि Jamadagni | 1 | ... | ... |
| | जातूकर्ण्य Játukarṇya | 1 | 1 | 1 |

| Alphabetical List of Smṛitis. | West and Bühler, 1st ed. (pp. xiii-xvi). | Borradaile's Vyávahára Mayúkha Preface | Hindu Law by Röer and Montriou. | |
|---|---|---|---|---|
| जाबालि Jábáli | 1 | 1 | 1 | |
| दत्त Datta | 1 | ... | ... | |
| दक्ष Daksha | ... | 1 | 1 | |
| दक्ष (गद्यमय) Daksha (prose) | 1 | ... | ... | |
| दक्ष (पद्यमय) Daksha (verse) | ... | ... | ... | |
| देवल Devala | 1 | 1 | 1 | 10 |
| धौम्य Dhaumya | 1 | ... | ... | |
| नारद Nárada | 1 | 1 | 1 | |
| नाचिकेत Náchiketa | 1 | ... | ... | |
| पराशर Paráśara | 1 | 1 | 1 | |
| पराशर (बृहत्) Paráśara (Bṛihat) | 1 | ... | ... | |
| पारस्कर Páraskara | 1 | 1 | 1 | |
| पितामह Pitámaha | 1 | 1 | 1 | |
| पुलस्त्य Pulastya | 1 | 1 | 1 | |
| पुलस्त्य (लघु) Pulastya (Laghu) | 1 | 1 | ... | |
| पुलह Pulaha | 1 | ... | ... | 20 |
| पैठीनसि Paiṭhínasi | 1 | 1 | 1 | |
| पौष्करसादि Paushkarasádi | 1 | ... | ... | |
| प्रचेतस् Prachetas | 1 | 1 | 1 | |
| प्रजापति Prajápati | 1 | 1 | 1 | |
| बुद्ध Buddha | 1 | 1 | 1 | |
| बृहस्पति Bṛihaspati | 1 | 1 | 1 | |
| बौधायन Baudháyana | 1 | 1 | 1 | |
| भरद्वाज Bharadvája | 1 | ... | ... | |
| भारद्वाज Bháradvája | ... | 1 | ... | |
| भृगु Bhṛigu | 1 | 1 | 1 | 30 |
| मनु Manu | 1 | 1 | 1 | |
| मनु (वृद्ध) Manu (old) | 1 | 1 | ... | |
| मनु (बृहत्) Manu (Bṛihat) | 1 | 1 | ... | |
| मरीचि Maríchi | 1 | 1 | 1 | |
| मार्कण्डेय Márkaṇḍeya | 1 | ... | ... | |
| मौद्गल्य Maudgalya | 1 | ... | ... | |
| यम Yama | 1 | 1 | 1 | |
| यम (लघु) Yama (Laghu) | 1 | ... | ... | |
| यम (बृहत्) Yama (Bṛihat) | ... | 1 | ... | |
| याज्ञवल्क्य Yájñavalkya | 1 | 1 | 1 | 40 |
| याज्ञवल्क्य (वृद्ध) Yájñavalkya (old) | 1 | 1 | ... | |
| याज्ञवल्क्य (बृहत्) Yájñavalkya (Bṛihat) | 1 | 1 | ... | |
| लिखित Likhita | 1 | 1 | 1 | |

| Alphabetical List of Smṛitis. | West and Bühler, 1st ed. (pp. xiii-xvi). | Borradaile's Vyávahára Mayúkha Preface. | Hindu Law by Röer and Montriou. |
|---|---|---|---|
| लोहित Lohita | 1 | 1 | ... |
| लोकाक्षि Lokákshi | ... | 1 | ... |
| लौगाक्षि Laugákshi | 1 | ... | 1 |
| वत्स Vatsa | 1 | ... | ... |
| वसिष्ठ (गद्यमय) Vasishṭha (prose) | 1 | ... | ... |
| वसिष्ठ (पद्यमय) Vasishṭha (verse) | 1 | ... | ... |
| वसिष्ठ (वृद्ध) Vasishṭha (old) | 1 | 1 | ... |
| वसिष्ठ (बृहत्) Vasishṭha (Bṛihat) | 1 | 1 | ... |
| वसिष्ठ Vasishṭha | ... | 1 | 1 |
| वार्ष्यायणि Varshyáyaṇi | 1 | ... | ... |
| विश्वामित्र Viśvámitra | 1 | 1 | 1 |
| विष्णु Vishṇu | ... | 1 | 1 |
| विष्णु (वृद्ध) Vishṇu (old) | ... | 1 | ... |
| विष्णु (बृहत्) Vishṇu (Bṛihat) | ... | 1 | ... |
| विष्णु (लघु) Vishṇu (Laghu) | 1 | ... | ... |
| विष्णु (गद्यपद्यमय) Vishṇu (prose and verse) | 1 | ... | ... |
| व्याघ्र Vyághra | 1 | ... | ... |
| व्याघ्रपाद Vyághrapáda | 1 | ... | ... |
| व्यास Vyása | 1 | 1 | 1 |
| व्यास (बृहत्) Vyása (Bṛihat) | ... | 1 | ... |
| व्यास (लघु) Vyása (Laghu) | 1 | ... | ... |
| व्यास (अन्योभिन्न एतदभिधेयो ग्रंथः) Vyása | 1 | ... | ... |
| शङ्ख Śankha | 1 | 1 | 1 |
| शङ्खलिखित Śankhalikhita | 1 | ... | ... |
| शाकटायन Śákaṭáyana | 1 | ... | ... |
| शाकल्य Śákalya | 1 | ... | ... |
| शाण्डिल्य Śáṇḍilya | 1 | 1 | ... |
| शातातप Śátátapa | 1 | 1 | 1 |
| शातातप (वृद्ध) Śátátapa (old) | 1 | 1 | ... |
| शातातप (बृहत्) Śátátapa (Bṛihat) | 1 | 1 | ... |
| शाट्यायन Śáṭyáyana | 1 | 1 | 1 |
| शौनक Śaunaka | 1 | ... | ... |
| शौनक (कार्तिक बृहत्) Śaunaka (Kártika or Brihat) | 1 | ... | ... |
| शौनक (यज्ञाङ्ग) Śaunaka (Yajñánga) | 1 | ... | ... |
| संवर्त Samvarta | 1 | 1 | 1 |
| संवर्त (बृहत्) Samvarta (Bṛihat) | ... | 1 | ... |
| संवर्त (लघु) Samvarta (Laghu) | 1 | ... | ... |

| Alphabetical List of Smritis. | West and Bühler, 1st ed. (pp. xiii-xvi). | Borradaile's Vyávahára Mayúkha Preface. | Hindu Law by Röer and Montriou. |
|---|---|---|---|
| सत्यव्रत Satyavrata ..... | 1 | ... | ... |
| सुमन्तु Sumantu..... | 1 | 1 | 1 |
| सोम Soma..... | 1 | 1 | 1 |
| हारीत Hárita ..... | 1 | 1 | 1 |
| हारीत (बृहत्) Hárita (Brihat)..... | 1 | 1 | ... |
| हारीत (लघु) Hárita (Laghu)..... | 1 | ... | ... |
| हारीत (वृद्ध) Hárita (old) ..... | ... | 1 | ... |
| हिरण्यकेशिन् Hiranyakeśin ..... | ... | ... | ... |

# LIST OF THE PRINCIPAL WORKS

*Used or referred to [in the order of the Sanskrit alphabet].*


Agni-Puráṇa, (Bibliotheca Indica,) Calcutta, vol. I. 1873, vol. II. 1876.
Atkinson's Gazetteer for N. W. P., vols. 1, 2, 3, 4.
Adhyátma-Rámáyaṇa. Bombay, lithographed at Bapu Harśet's Press, Śáké 1779.
Anantadeva—(see Saṁskárakaustubha).
Aparárka, a commentary by Aparárka, on the Yájñavalkya Smṛiti (MS.)
Amarakośa—Bombay, Government Book Depôt, A. C. 1877.
Ashṭádaśasmṛitayah—(my own private collection MSS. and Benares Edition, lithographed, Samvut 1923.)
——————Calcutta edition by Paṇdita Jíbánand, B.A. 2 vols., A. C. 1876.
Áchára Mádhava (MS.)
Ápastamba Dharmaśástra, Bombay, Part I. A. C. 1868; Part II. A. C. 1871.
Ápastamba Sráuta Sútra (MS.)
Áryavidyá-Sudhákara by Yajñeśvara Śástrí, Bombay, Śáké 1790, A. C. 1868.
Áśvaláyana Gṛihya Sútra, (Bibliotheca Indica,) Calcutta, Samvut 1924, A. C. 1869.
Áśvaláyana Śrauta Sútra, (Bibliotheca Indica,) Calcutta, A. C. 1874.
Indian Law Reports.
Indian Wisdom, second edition, by Prof. Monier Williams.
Utsarga Mayúkha by Nílakaṇṭha Bhaṭṭa (MS.)
Ṛig Veda, Saṁhitá, Edition by Professor Max Müller, in 6 vols.
Aitareya Bráhmaṇa, Dr. Haug's Ed. Bombay, vol. I. A. C. 1863; vol. II. A.C. 1863.
Oudh Gazetteer, in 3 volumes, A. C. 1877.
Auśanasa Dharmaśástra (see Calcutta Ed. of 18 Smṛitis).
Kamalákara's Vivádatáṇḍava (MS.)
Kátyáyana Śrauta Sútra, Berlin, 1859.
Kátyáyana Smṛiti (see Calcutta Ed. of 18 Smṛitis).
Káśí-mṛita Moksha-Nirṇaya, by Náráyaṇa Bhaṭṭa. (MS.)
Cowell's Tagore Law Lectures, 1870.
Kullúka Bhaṭṭa's Commentary on Manu Smṛiti, Bombay, lithographed by Bápú Sadáśiva Śéṭa Hegishṭé, Śáké 1770.
Kúrma-Puráṇa (MS.)
Kṛishṇa Bhaṭṭa's Commentary on the Nirṇayasindhu (MS.)
Colebrooke's Essays, 3 vols. London, 1873.
Gazetteer for the Hydrabad Assigned Districts, Bombay, 1870.
Garuḍa-Puráṇa (MS.)
Gágábhaṭṭa's Játiviveka (MS.)
Gurucharitra (MS.)
Gṛihyapariśishṭa, (Bibliotheca Indica,) Calcutta, A. C. 1869.
Gopatha Bráhmaṇa of the Atharvaveda, (Bibliotheca Indica,) Calcutta, A. C. 1872.
Gobhila-Gṛihyasútra with the Commentary of Chandrakánta Tarkálankára, (Bibliotheca Indica,) Calcutta, A. C. 1879.
Gopínátha Bhaṭṭí (MS.)
Gautama (see Calcutta Ed. of 18 Smṛitis, and MS. collection).
John Muir's (Dr.) Sanskṛit Texts, vols. 1 to 5.
Jímútaváhana's Dáyabhága with Śrí Kṛishṇa Tarkálankara's Comments.—Calcutta Edition, A.C. 1829.

Jaimini's Mímánsá with the Commentary of Sabara Śvámin, (Bibliotheca Indica,) Calcutta, vol. I. 1873, vol. II. (incomplete).
Táránatha's (Prof.) Kosá entitled Váchaspatya (issued in parts).
Taittiríya-Áraṇyaka, (Bibliotheca Indica), Calcutta, A. C. 1872.
Taittiríya Krishṇa Yajuh-Saṁhitá, (Bibliotheca Indica), Calcutta, vols. 1, 2 and 3, and MS.
Taittiríya Bráhmaṇa, (Bibliotheca Indica,) Calcutta, vols. 1, 2, and 3.
Dattaka-Chandriká, Calcutta, 1834.
Dattaka-Laugakshi-Bháskarí (MS.)
Dattaka Nirṇaya (MS.)
Dattaka-Mañjari, (MS.)
Dattaka-Mímánsá, Calcutta, 1834.
Dattaka-Darpaṇa (MS.)
Dánachandriká, Bombay, lithographed.
Devalasmṛiti (MS.)
Devánandabhaṭṭa (see Dattaka Chandriká and Smṛiti Chandriká).
Deví Bhágavata.
Dharmadvaitanirṇaya by Śaṅkarabhaṭṭa (MS.)
Dharmasindhu, Bombay, lithographed by Bápú Sadáśiva Śeṭa, Śáké 1780.
Dharmábdhi Sára (see Dharmasindhu).
Dhátupáṭha of Páṇini (see Páṇini).
Nanda Paṇḍita's Commentary on Vishṇu Smṛiti (MS.)
Nágojíbhaṭṭa's Sápiṇḍyapradípa (MS.)
Nárada pañcharátra, (Bibliotheca Indica,) Calcutta, A. C. 1865.
Náráyaṇabhaṭṭa's Muhúrta Mártaṇḍa, Poona, lithographed by Raoji Śridhara Gondhalekara, Śáké 1787, A. C. 1866.
Nirṇayasindhu, Bombay, lithographed by Bápú Sadáśiva Śeṭa Hegishṭé, Śáké 1784.
Patañjali's Mahábháshya, with notes in Five Parts, lithographed at Benares, Samvat 1927.
Padma-Puráṇa (MS.)
Paráśara Saṁhitá (MS.)
Paráśara Smṛiti with the Commentary of Mádhava (MS.)
Páṇini: Bonn, 2 vols., A. C. 1839.
Párijáta (MS.)
Putrakalpalatá by Yajñeśvara Śástrí; Bombay, Śáké 1800, A. C. 1878.
Púrta-Kamalákara (MS.)
Pratishṭhá-mayúkha (MS.)
Prayoga Ratna by Náráyaṇabhaṭṭa, Bombay, lithographed, 1st ed. in Śáké 1781. 2nd Ed. Śáké 1783.
Printed Judgments of H. M. High Court of Bombay.
Bombay Gazetteer by J. M. Macleod, Esq., vols 2, 3, and 4.
Bombay High Court Reports.
Borradaile's Reports of Cases decided by the Sadar Divani Adálat of Bombay, vols. 1 and 2
Bálambhaṭṭa (MS.)
Bṛihadáraṇyaka Upanishad, (Bibliotheca Indica,) Calcutta, 3 vols.
Bṛihaspati Smṛiti (see MS. and Calcutta Collection of 18 Smṛitis).
Bengal Law Reports.
Bellasis' Bombay Sadar Divani Reports.
Baudháyana (MS.)
Bráhmasútra, (Bibliotheca Indica,) Calcutta, 2 vols.

Bhattalapáṇḍaya's Law of Alya Santana, translated by B. Rámaswámi Naidu, Madras, 1872.
Bhaṭṭojí Díkshitá's Commentary on Páṇini, Calcutta, (Táránáth's edition), 2 vols.
——————————Comment, on the 24 Smṛitis (MS.)
Bhavishya Puráṇa (MS.)
Bhágavata Puráṇa (Gunpat Krishṇaji's Press, Śaliváhana Śáké, 1782, Bombay).
Bháskarácharya's Lílávatí (MS.) English Translation by Dr. Taylor.
Matsyapuráṇa, Poona, lithographed in Śáké 1792, 2 vols.
Madanaratna (MS.)
Madanapárijáta (MS.)
Madras High Court Reports.
Manu Smṛiti, with the Commentary of Kulláka-Bhaṭṭa: lithographed by Bápú Sadáśiva Śeṭa, Śáké 1780, Bombay.
Mallinátha's Commentary on Kálidása's Raghuvañśa, Calcutta, A. C. 1852.
Macnaughten's Hindu Law, 2 vols. 1st ed.
Mahábhárata, printed at Gunpat Krishṇaji's Press.
Max Müller's Sanskrit Literature, 2nd edition.
Márkaṇḍeya-puráṇa (Bibliotheca Indica), Calcutta, A. C. 1862.
Mitákshará of Vijñáneśvara, Bombay, lithographed by Śrídhara Śivalál in Śáké 1785.
Of Haradatta on Gautama (MS.)
Mímánsá Darśana (see Jaimini's Mímánsá).
Moor's Indian Appeals.
Medhátithi's Commentary on Manu (MS.)
Mayne's Hindu Law and Usage, 1878.
Yáska's Nirukta, Güttingen, A. C. 1852.
Rájputána Gazetteer, vol. I. 1878.
Ramáyaṇa Válmikíya, Gaṇpat Kṛishṇáji's Press, 1st ed.
Laghumanjúshá of Nágesá Bhaṭṭa, Benares, lithographed edition.
Literary Remains of Dr. Theodore Goldstucker, 2 vols.
Vasishṭha Smṛití, (MS.); another lithographed edition, Benares.
Varáhá Mihira's Bṛihat-Samhitá (Bibliotheca Indica).
Váchaspati-Miśra's Viváda Chitámaṇi, Calcutta, Śáké 1759.
Wilson's Essays on the Religion of the Hindus.
Viváda Chintámaṇi (see Váchaspati Miśra).
Víramitrodaya, Áchárá dhyáya, by Mitra Miśra (MS.)
Víramitrodaya-Vyaváhárádhyáya by Mitra Misrá, Calcutta, Samvat 1872, A. C. 1815.
West and Bühler's Digest.
Vyavasthá Chandriká by Śyámcharana Śarkár, A. C. 1878.
Vyaváháratattva, Calcutta, A. C. 1828.
Vyása Smṛiti (Calcutta Ed.)
Vrata Kaumudí of Śankara Bhaṭṭa, Bombay, lithographed, Śáké 1785.
Vratarája, Bombay, lithographed, Śáké 1782.
Vratárka of Śaṅkara Bhaṭṭa (MS.)
Śaṅkara Vijaya of Ánanda Giri (Bibliotheca Indica), Calcutta, A. C. 1868.
Śaṅkara Jaya of Mádhava, Bombay, Śáké 1786.
Śabdastomamahánidhi by Prof. Táránátha, Calcutta, A. C. 1870.
Śiva Puráṇa (MS.)
Śúdra Kamalákara, Bombay, lithographed, Śáké 1784.
Śúlapáṇi (MS.)

Śráddha Mayúkha (MS.) and Benares edition.
Satyáshádhasútra of the Black Yajurveda (MS.)
Saṁskára Kaustubha. Bombay, lithographed, Śáké 1783.
Saṁskára Mayúkha (MS.) and Benares Ed.
Sarvadarśana Saṅgraha, (Bibliotheca Indica,) Calcutta, 1858.
Sápiṇḍyadípaka (MS.)
Subodhiní by Viśveśvara (MS.)
Subodhiní on the Baudháyana Sútra (MS.)
Statistical Account of Bengal, by Dr. W. W. Hunter. (20 vols.)
Steele's Summary of the Law and Custom of Hindu Castes (1st. ed.), 1827.
Stokes' Hindu Law Books.
Strange's Hindu Law, 2 vols. 3rd ed.
———————, Mr. Justice, Manual of—2nd ed.
Smṛiti Chandriká, Calcutta, A. C. 1870.
Súryasiddhánta and Śiromaṇigoladhyáya translated by Bápú Deva Śastrí and L. Wilkinson, Calcutta, 1861.
Central Provinces Gazetteer, 1870.
Sacred Books of the East, by Professor M. Müller, 3 vols.
Skandapuráṇa (MS.)
Smṛiti Ratnákara (MS.)
Smṛityartha Sára (MS.)
Hunter's Orissa, 2 vols.
Harivaṁsa, Bombay, lithographed, Śáké 1783.
Hemádri's Chaturvarga Chintámaṇi, Dana, Khaṇḍa and Vrata Khaṇḍá (Bibliotheca Indica), Calcutta, 1873 and 1878.

# VYAVAHÁRA MAYÚKHA.

## SALUTATION TO GAṆEŚA.

1. Having spoken of the rules of royal policy, and duly bowed to the lotus-like feet of the sun, Nílakaṇṭha composes a small [treatise] laying down juridical rules.

Benediction.

2. I honour [my] preceptor Śankara, the sole head of the leading twice-born, master of laws, source of happiness, [and] the instructor of all in Káśí [Benares].[1]

3. That highest being who had appeared in two [forms][2] here [in this world] for expounding the two conflicting systems, now appeared [in] one [form] as Śrí Śankara Bhaṭṭa; and he accepted the doctrine of identity of the human soul with the divine essence propounded by the Mímánsakas.[3]

4. Herein I have discarded whatever was favoured by [literary] forgers, by reason of its resting on no authority; however, there is no deficiency of discourse whatever herein on that account; [for] no worship is lowered for want of the celestial flower.[4]

### *Definition of Vyavahára.*

*Vyavahára*, [or] a judicial proceeding, is a transaction which inculcates [the rules] whereby the determination of [the party who has committed] the unrecognized wrong [as] between the disputing parties is made known. [Or] it is a transaction made by plaintiff and defendant, in which are involved evidence, possession, and witnesses; [or] which proposes to decide between conflicting pleadings. As regards confession to plaintiff's claim, the use of the term *Vyavahára* [in such a case] is, according to Madanaratna, secondary. The latter part [of the

[1] This refers to the father of Nílakaṇṭha; but the adjectives in the verse have another meaning which applies to Śankara, the tutelary deity of Benares. When thus rendered the verse would stand as follows:—

I honour Śankara, on whose head alone shines the moon [as an ornament], who is the lord of the Bull, who bears Párvati [as his half-body], and who, in Káśi, instructs all. [See further Káśi-Mṛita-Moksha-Nirṇaya by Náráyaṇabhaṭṭa, MS.; Adhyátma Rámáyaṇa, Yuddha Káṇḍa, chap. xv., v. 62.]

[2] Śankarácharya and Kumárilabhaṭṭa. [3] This refers to Vyása and his school.

[4] *Khapushpa* is the word used; and it means an imaginary celestial flower, used as a familiar illustration in such figures. As no worship would be spoilt for want of a flower which does not exist, the Mayúkha will not, says the author, likewise suffer from the omission of matter which rests on no authority.

above definition] is for excluding unfounded disputes, false pleadings, &c.

Now [as to] its titles:—Yájñavalkya [ch. ii., v. 5]:—"If one aggrieved by others in a way contrary to the Smṛitis and the established usage complain to the king, that subject is one of the titles of Vyavahára, or a judicial proceeding."[1] *Adharshitah* [means] disregarded.

Its eighteen divisions are [thus] mentioned by Manu [ch. viii., vv. 4, 5, 6, 7]:—"Of them, first [1] non-payment of debts, [2] deposit, [3] sale without ownership, [4] partnership, [5] resumption of gift, [6] non-payment of wages, [7] transgression of compact, [8] rescission of purchase and sale, [9] disputes between the master and the herdsman, [10] boundary disputes, [11, 12] assault and abuse, [13] theft, [14] heinous offences, [15] adultery, [16] duties of man and wife, [17] partition, and [18] gambling and prize-fighting. These are eighteen titles in legal procedure."[2] *Anapakarma* [means] not returning. *Anuśayah* [means] repentance. *Dyútam* [means] gaming with inanimate objects. Gaming with animals is called *Samáhvaya*. Here, although according to the text of Bṛihaspati, "killing a man, theft, harbouring another's wife, and both kinds of violence [*i. e.*, both with speech and with the body], ought to be the four species of *Sáhasa* (heinous offences)," adultery[3] and the two species of violence with speech and with the body, are varieties of violence, they are mentioned separately, [in the same way] as *balívarda* (a bull) [sometimes] is after *go* (cattle of the bovine genus).[4] The nature of these eighteen titles will be explained further on.

---

## * २ *ESSENTIALS OF CIVIL JUDICATURE.

Essentials of Civil Judicature.

The Court-house.

Bṛihaspati:—"[The king] should build a separate house in a fortress, having water and trees around it; [and] on the eastern side of it [the house] should be made the court-room, properly constituted and facing the east."[5]

---

[1] Vír. l. 1, p. 2. [2] Mit. ch. ii. l. 2, p. 2; Vír. l. 89, p. 2.

[3] The term *Steya* (theft) appears to have been inadvertently left out of the text in this place: this is clear from the above passages from Bṛihaspati and Manu.

[4] This is a mode of illustration wherein the word *go*, meaning bovine cattle generally, is used, and yet the word *balivarda* (a bull) is added to denote the importance of the latter.

[5] Vír. l. 3, p. 2.

And the same should be the *Dharmádhikaraṇam*, or seat of justice. For thus is the text of Kátyáyana :—"That place, where discrimination between truth and falsehood conformably to the precepts of law is made, is the seat of justice."[1] Manu (ch. viii., vv. 1, 2) :—"The king, desirous of investigating judicial proceedings, should enter the court, (composed and dressed and decorated modestly, [and along] with Bráhmaṇas and councillors who are learned in the law), and attend to the business of litigants."[2] Yájñavalkya (ch. ii., v. 1) :—"The king, divested of anger and avarice, should attend to administer justice along with learned Bráhmaṇas, [and] conformably to the precepts of law."[3] *Nṛipah* [means] any one having authority to protect subjects, not necessarily a Kshatriya. Kátyáyana :—"The king who makes investigations with judges, councillors, Bráhmaṇas, the family priest, and respectable men [or assessors], attains heaven by reason of his righteousness."[4] Here the Bráhmaṇas are those who are *aniyuktáh*, or not appointed.[5]

The respectable men [or assessors] are *niyuktáh* (appointed).[6] And it is said to the same effect :—"Whether *niyuktah or aniyuktah*, one who knows the law is competent to speak."[7]

The definition of a *práḍviváka* (a judge) is thus given by Bṛihaspati :—"He who in a cause examines, and also cross-examines, and who speaks sweetly at first, is therefore called *práḍviváka*."[8]

Definition of *amâtya* (councillor) :—Vyása—"The king should appoint as *amátya* (councillor) a Bráhmaṇa who knows all the Śástras, who is free from avarice, who speaks justly, who is wise, whose standing is hereditary, and who [is a] twice-born." Here the term *dvija* (twice-born) is used after [the term Bráhmaṇa] for the purpose of including a Kshatriya or a Vaiśya in the absence of a Bráhmaṇa. And Kátyáyana [says] to the same effect :—"Where there is no learned Bráhmaṇa, there [the king] should appoint a Kshatriya or a Vaiśya who is learned in law. He should scrupulously exclude a Śúdra."[9]

As regards *Sabhyáh*, (respectable men), [says] Yájñavalkya [ch. ii., v. 2] :—"Those should be made assessors by the king who have studied the Vedás and Śástras, who know the law, who speak the truth, and who look to friends and foes with the same feelings."[10] As regards their number [says] Bṛihaspati :—"The court where there sit

[1] Vír. l. 3, p. 2. [2] Vír. l. 4, p. 1. [3] Vír. l. 4, p. 2.

[4] Mit. ch. ii., l. 2, p. 1 ; Vír. l. 4, p. 2. [5] They would be honorary.

[6] Borradaile uses the word assessor, which has now a definite meaning, whereas the word in the text is *Sabhyáh*, or those fitted to sit in a *Sabhá*, or a seat of justice.

[7] This evidently refers to the word Bráhmaṇás in the foregoing passage. See Mit. l. 2, p. 1 ; Vír. l. 4, p. 2.

[8] Vír. l. 10, p. 2. [9] Vír. l. 11, p. 1. [10] Vír. l. 11, p. 2.

seven, five, or three Bráhmaṇas, conversant with the ways of the world and learned in the Vedas and in the laws, is like the sacrificial assembly."[1] The same:—"The king should appoint accountants and scribes, who know the principles of grammar and have studied the lexicons, who are skilled in reckoning, who are pure, and who are acquainted with various characters."[2] *Śabdah* [means] the science of words [or grammar], and *abhidhánam*, a lexicon or dictionary. Kátyáyana:—"There, Vaiśyas who understand justice should be made auditors." *Tatra* [means] in the above court. Bṛihaspati:—"A truthful and confidential man should be appointed, subject to the authority of assessors, to summon witnesses, the plaintiff and the defendant, and to look after them."[3] He must be a Śúdra. Vyása [says] to the same effect:—"A stout Śúdra whose ancestors were employed in that office, acting under the orders of the assessors, should be made a *Sádhyapála* to obtain materials for trial." Yájñavalkya [ch. ii., v. 3]:—"A king who, from press of other work, cannot attend to administer justice, should appoint [in his own place] a Bráhmaṇa learned in all laws to work along with the assessors."

Bṛihaspati [thus] relates the duties of a king, a president, and others:—"The president is the speaker; the king is the chastiser [or one who gives the order]; the assessors are the investigators of the subject-matter of litigation; the accountant is to count the money, and the scribe is to write the legal proceedings."

The same:—"The king should sit facing the east, the assessors the north, the accountant the west, and the scribe the south."

* Yájñavalkya mentions investigators other than [those constituting] the court [ch. ii., v. 30]:—"Officers appointed by the king, the *Púgás*, the *Śreṇis*, and the *Kulas* should be respected in the order they are mentioned in matters of legal proceedings between men."[4] *Nṛipeṇádhikṛitáh* (officers appointed by the king), [that is] the *Práḍviváka* (judge) and others. The *Púgás*—communities of various traders living in the same village [and] of different castes. The *Śreṇis*, the reverse of the *Púgás*. The *Kulas*—aggregates of castemen, relatives, or family-members or brethren. Bṛihaspati also [says]:—"For those who wander in the forest there should be an office in the forest; for soldiers in the army; so for merchants in the caravans." *Karaṇam* (an office) [means] a court of justice.

Kátyáyana mentions the time for conducting legal proceedings:—"The king should determine judicial proceedings in the Court before

---

[1] Vír. l. 11, p. 2.
[2] Vír. l. 13, p. 2.
[3] Vír. l. 13, p. 2.
[4] Vír. l. 12, p. 2.

noon, conformably to rules laid down in the Śástras, putting down the inimically disposed. Those three divisions of the day, omitting an eighth, are declared the best time for legal proceedings as laid down in the Śástras." [The first] half of the first watch being left, the three divisions [of one-eighth each] subsequent to it up to noonday [is the proper time]. Samvarta mentions the [following] as the excepted days:—"On these days, viz. the fourteenth,[1] the thirtieth, the fifteenth, and the eighth,[1] the wise should not attend to judicial investigations."[2] Bṛihaspati:—"Having sat there before mid-day along with the old, the councillors, and the dependants, the king should attend to [judicial proceedings], and also listen to [the expositions of] the Puráṇas, and religious and moral laws." *Tám*, [that is] in the Court; *Arthaśástram*, the science of polity.

In the matter of a conflict between religious and moral laws, says Nárada:—"Where there is a conflict between religious and moral laws, one should follow the precept of the religious law, disregarding that of the moral." As regards difference between two Dharma-Śástras [or Smṛitis] Yájñavalkya says (chap. ii., v. 21):—"When two Smṛitis disagree, that which follows equity [as guided by] the practice of the old should prevail."[3] Bṛihaspati speaks of the sin which attaches to one who does not take *nyáya* (equity) into consideration. [Thus:—] "No decision should be made exclusively according to law because in a decision devoid of *yukti* (reason or equity), failure of justice occurs."[4]

[The king] should also take into consideration the customs of the country, &c.: for so says Bṛihaspati:—"Those usages of a country, tribe, and family which have been introduced by the ancients should be preserved intact, otherwise the subjects rebel; popular disaffection takes place, and the army and treasure are destroyed. The mother's brother's daughter is taken in marriage by the twice-born of the south. In the central country, [the twice-born] engage in service, trade, and eat cows. [Twice-born] people of the east are fish-eaters, and their women are notoriously immoral. In the north, the women are addicted to drinking, and can be touched in their monthly courses by men." By thus acting they are not liable to *práyaśchitta* (penance) or legal correction.[5] *Púrve* (of the east), [meaning] living in the eastern parts. In some copies the reading is *sarve* (all), *sarve* (meaning) Bráhmaṇas and others. *Damah* [means] correction or legal

[1] Of each fortnight as laid down in the lunar calendar.

[2] Vír. l. 9, p. 2. [3] Vír. l. 6, p. 1. [4] Vír. l. 6, p. 1.

[5] Vír. l. 9, p. 2, which mentions in addition the taking in marriage a brother's widow: thus:—"खशजाताः प्रगृह्णन्ति भ्रातृभार्यामभर्तृकाः" which means "the Khaśajáta (people born in Khaśa) marry the widow of a deceased brother." As to the situation of Khaśa, see Bhágavata, skanda ix. ch. xx. v. 29; Varáha Mihira, ch. xiv. v. 6.

punishment. According to some writers the mention of *práyaśchitta*, &c., for the above acts, in the Smritis, applies to countries not included in the above texts. Others again who construe *práyaśchitta—dama* as *práyaśchittarúpo yo damah*, (correction in the nature of penance), maintain the exemption [of the people of these countries] from [temporal] punishment only,[1] but they hold that in other countries both punishment and penance will have to be undergone.

Vyása says :—"The decision of a dispute among merchants, mechanics, cultivators, dyers, and such others, is impossible to be made by others [*i. e.* persons of other persuasions]; but it should be caused to be made by those who know those pursuits."[2] [Says] Manu [chap. viii., v. 390]:—"If a dispute arise among the twice-born on a matter affecting their several orders, a king desirous of his soul's good should not propound improper law."

Kátyáyana :—"At the proper time, the king should thus interrogate the plaintiff standing before [him] in a humble posture, 'O man, fear not, say what you come for, and what your* complaint is.' On his coming into court he should be thus asked, 'From whom, where, when, and on what ground, [have you suffered]?'[3] Thus interrogated, what he speaks as his grievance should be considered along with the assessors and the Bráhmaṇas; and, if the complaint be proper, a sealed [order] or a man [*i. e.* a messenger] should be sent to summon [the defendant]."[4]

* 8

Nárada :—"Until the investigation is gone through, the defendant avoiding the summons or setting up a false plea may be arrested."[5] The same [Nárada] mentions four kinds of legal restraint :—(1) confinement to a place; (2) limitation as to time; (3) prohibition against leaving [the particular place]; and (4) restriction from [other] employment. Thus legal restraint is four-fold. He who is subject to it should not transgress it."[6]

Legal restraint.

Four-fold restraint.

The same lays down punishment for one who transgresses legal restraint :—"If one fit to be restrained, and placed under legal restraint, transgresses it, he makes himself liable to punishment."[7] The same

---

[1] The ends of *práyaśchitta* (penance) are two—exemption from hell, and correction for worldly purposes. According to these, therefore, the word *práyaśchitta* is to be understood in the latter sense only; so that the people described in the text escape punishment only, but must undergo *práyaśchitta* (penance) to escape future punishment.

[2] Vír. l. 10, p. 1. [3] Vír. l. 15, p. 1. [4] Vír. l. 16, p. 2. [5] Vír. l. 17, p. 2.

[6] See *Yájñavalkya*, ch. ii. v. 5, and comments thereon; Vír. l. 17, p. 2.

[7] Vír. l. 17, p. 2.

speaks of punishment being sometimes inflicted even on the person restraining, [thus]:—"He who enforces restraint by improper means, such as by [gagging the mouth] to stop the speech, or by stopping respiration, &c., is liable to punishment; not he who breaks through such [restraint]."[1]

Under some conditions Nárada lays down no punishment for breaking through *ásedha* (legal restraint):—"He who is placed under restraint, while crossing a river, or when in an inaccessible road [forest], or in a bad place, or in a calamity, or the like, shall not be guilty of an offence if he break through such restraint." Kátyáyana prescribes punishment for him who restrains those who ought not to be restrained:—"He who restrains him who ought not to be restrained is liable to punishment by the king. This is the rule."[2]

Those who ought not to be arrested.

The same names those who ought not to be put under restraint:—"Persons standing on a tree, or a hill, or seated on an elephant, a horse, a carriage, or in a boat; [these are all] persons in a dangerous place:—[therefore] all these are not to be put under restraint by those seeking right investigation of claims. Also persons afflicted with disease; persons placed in difficulties; and a *yajamána* (a sacrificer)."

[3] [In summoning, Nárada lays down the following rule]:—"The king should not cause to be summoned the infirm, the minor, the old, persons in dangerous places,[4] and persons immersed in religious duties; a person who would be ruined (if he were summoned),[5] a person suffering from deprivation of his wished-for objects; persons engaged in doing the king's service, or in celebrating festivals; the intoxicated; persons possessed of the devil; the idiot; persons involved in grief; the helpless [such as pupils, servants, &c.]; the woman who has no relatives to help her; a woman of a respectable family; a woman recently delivered; a maiden of the highest *tribe* [a Bráhmaṇi]; [because] these females are declared to be dependent on their tribes. It is allowable to summon women upon whom their families are dependent; profligate women, prostitutes; women of low families and degraded women. Having examined the complaint, the king may also summon in weighty matters hermits and the like who have repaired to the woods,

Summons.

Exception to the above.

[1] Vír. l. 17, p. 2.

[2] Vír. l. 17, p. 2.

[3] The passage within brackets occurs in MS. E. Vír. refers the text to Kátyáyana: l. 16, p. 2.

[4] See preceding verse. Vír. explains *Vishamastha* as meaning 'exposed to difficulties,' l. 16, p. 2.

[5] See Vír. l. 16, p. 2.

without offending them. Having regard to the time and place and to the gravity or otherwise of matters, the king may even cause an infirm person, &c., to be brought slowly and slowly.[1] In some copies[2] the reading is *yánaih*, that is (by vehicles) [in place of the second *śanaih*, (slowly)].

A person who, being summoned, does not attend, is liable to punishment. Bṛihaspati to the same effect:—"Where a person having relations or family, being summoned, does not attend, through pride, [the king] should fix upon his punishment according to the nature of the matter in dispute."[3] Kátyáyana prescribes different punishments according to the [magnitude of the] subject-matters in dispute. "If the complaint be trivial, the fine should be fifty [*paṇas*]; if it be of a middle kind, it should not be less than one hundred; in complaints of a serious nature it should always be not less than five hundred."[4]

Pitámaha describes the proceedings to be taken after the arrival of the person summoned:—"The defendant should be made to stand with the complainant before the court." The third case [*vádiná* is here used as meaning] 'along with.'

Kátyáyana:—"There [in the court] the complainant should [first] address, then the defendant; after them the *sadasyáh* (assessors), and lastly *prádviváka* (the judge)"[5]. Bṛihaspati:—"When plaintiff and defendant come [together], each saying 'I am first', 'I am first,' the plaint should be registered* in the order of their classes, or[6] after examining the injury.

Agent.

"A relation or a duly appointed person[7] may undertake the plea or answer for persons who are of weak intellect, or insane, or old, or women, or minors, or diseased."[8] Nárada:—"Whether a person be appointed by plaintiff or employed by defendant, success or failure belongs to him for whom he pleads." As regards Kátyáyana's text, "If a person other than a brother, father, son, or servant, litigating on behalf of another, speak falsely in litigation, he shall be liable to punishment," it is in reference to persons who are not duly appointed agents.

Exceptions.

In some cases the absence of an agent is enjoined by the same [author]. "In [prosecutions for] killing a Bráhmaṇa, drinking liquor, theft, adultery with the preceptor's wife, killing a man, touching another's

---

[1] Vír. l. 16, p. 2. [2] See Vír. l. 17, p. 1. [3] Vír. l. 19, p. 1.
[4] Vír. l. 17, p. 2. [5] Vír. l. 18, p. 1.
[6] In MSS. B and C, instead of *vá* (or) there is *cha* (and).
[7] It would be guardian *ad litem*. [8] Vír. l. 19, p. 1.

wife, and also eating forbidden things, seduction and defilement of a virgin, violent language and actions, fraud, and also treason, no *pratividi* (deputy) shall be given: the doer of the act shall plead the cause himself." Repetition of the word *steya* (theft) is for the entire prohibition of a deputy [in a case of theft and offences of the like nature].[1] *Prativádi* [means] a deputy.

The Pleadings.

When the defendant is brought up, the proceedings of the plaintiff are thus described by Yájñavalkya [ch. ii., v. 6] :—"That which the plaintiff relates should be recorded in the presence of the defendant, [and] marked with the year, the month, the fortnight, the day, the name, the caste, and the like."[2] In another[3] Smriti :—"That is termed a plaint presented to the king which contains *artha* (a cause of action), which briefly states the subject-matter fully; [which is] intelligible, expressed unambiguously, stated in a form cognizable [by the Court], non-figuratively, conformable to the original complaint, possible, uncontradictory, certain, capable of proof, concise, exhaustive, not impossible in regard to place and time, containing the year, the season, the month, the fortnight, the day, the country, the district, the village, the house, the subject-matter in dispute, the name of the tribe, description of the person, and age; the measure or quantity of the subject-matter in dispute, the names of the complainant and the defendant, and marked with the names of their respective ancestors[4] and several kings[5]; the cause of forbearance; the injury done to the complainant; and names of the original grantee and grantor." The use of the mention herein of the year, &c. will be declared in [the Section on] mortgages, &c. The use of the country and the like in some cases is explained in another Smriti.[6] "In suits for immoveable property, these ten should be entered, viz. the country, the village, the site, the tribe, the names [of the plaintiff and defendant], names of neighbours, the name and dimensions of the field, and the names of the father and grandfather and great-grandfather (of plaintiff and defendant), and a description of former kings."

Kátyáyana :—"The *prádviváka* (Judge) should cause to be taken down plaintiff's statement, as told by him in his own way, on a board with chalk; then on paper after it has been corrected."[7]

---

[1] The first *steya* (theft) probably refers to the theft of gold, which ranks in Hindu law with the primary sins, such as *Brahmahatyá*, &c. mentioned in the text (see Manu, ch. xi, v. 54). The second *steya* stands for stealing generally.

[2] Vír. l. 19, p. 1. [3] These texts occur in the Smriti Sangraha.

[4] Father, grandfather, and great-grandfather: see Vír. l. 20, p. 1.

[5] Those who may have lived during the time of enjoyment by the defendant: *id.*

[6] That of Kátyáyana: see Vír. l. 20, p. 1; also Mit. ch. ii. l. 3, p. 2.

[7] Vír. l. 22, p. 1.

Nárada declares the time of correction:—"He (*prádviváka*) may make correction of plaintiff's statement before an answer to it is given; being stopped by the answer the correction should cease. So long as the defendant shall not enter an answer to the plaint, so long may plaintiff cause to be entered [in the plaint] whatever matter he wishes."[1]

Inadmissible Plaints.

These being the characteristics of a [proper] plaint, those containing opposite are evidently improper plaints; [still] they are thus described in another Smṛiti:[2]—"The king should reject a false plaint which is impossible, disclosing no injury, [is] unmeaning, unfounded, incapable of proof, or contrary [to law, &c.]." *Aprasiddham* (impossible), for example:—"My imaginary heavenly flower was stolen;" *Nirábádham*, (disclosing no injury): such as, "He does his work by the light of my lamp;" *Nirartham* (unmeaning):—such as, "He deprived me of my [letters] *ka, cha, ṭa, ta, pa*"; *Nish-prayojanam*, (unfounded):—as, "My neighbour reads with proper intonation;" *Asádhyam*, (incapable of proof);—as, "I was derided by this person with a scowling brow, &c.;"—*Viruddham*, (contrary):[3]—as, "I was abused by a dumb person;" or contrary to the [usages of a] city, country, &c., as is declared in the following Smṛiti:—"That cause which is prohibited by the king, which is hostile to the citizens, or to the whole country, as also that which is hostile to the *amátyás** or councillors [or interests of trades]; others, again, which are hostile to the leading members of a city or town:—all these causes are declared inadmissible."

* ६.

Even more than one count in a declaration do not constitute it a false plaint, otherwise contradiction would arise to the following text of Kátyáyana, viz.:—"A king desirous of arriving at the truth may undoubtedly admit even that plaint which contains several counts which are in themselves conformable to law." As for the text, "A plaint containing several titles or counts does not stand," it is to be understood to mean that those counts do not all stand at one time, but one after another.

The Answer.

The plaint being thus written, Yájñavalkya thus notes subsequent proceedings (ch. ii., v. 7):—"The answer of the defendant who has heard the plaint should be taken down in writing in the presence of the complainant."

Nárada thus defines the answer:—"Men versed in law consider that an answer which meets the points contained in the plaint, which is concise and reasonable, unambiguous, consistent, and easy to under-

[1] Vír. l. 22, p. 1. [2] Kátyáyana: see Vír. l. 20, p. 2.

[3] Contrary to the law of nature, as in the case now given.

stand without an explanation."[1] Kátyáyana mentions its four varieties:—"Answer is of four kinds, viz.:—either by a denial, or by confession, or by a special plea, or by the plea of a former trial."

Denial.

The same author thus describes the answer of denial:—"If the defendant should make a denial of the claim, that answer is known in law as a denial."[2]

The same [author] details it as of four kinds:—"(1) This is false; (2) I know it not; (3) I was not present then; and (4) I was not born at that time: thus is the four-fold character of the answer of denial."[3]

Confession or admission.

The answer of confession is described in another Smriti[4]:—"An assent to the claim is declared to be an answer by way of confession."

Special plea or exception.

Nárada thus describes the answer by a special plea or exception:—"If the defendant, admitting the claim set in writing by the plaintiff, sets up a plea, it is called a plea of special exception."[5]

Former judgment or trial.

Kátyáyana describes the plea of former judgment:—"If a person, though defeated at law, sue again, he should be answered, 'You were defeated formerly.' This is called the plea of former judgment."

These being the characteristics of a [proper] answer, those answers which are destitute of these characteristics though self-evidently false, still their nature is thus explained in another Smriti:—"An answer which is dubious, not to the point, too confined, too extensive, meeting a part of the plaint, and so on, cannot be an answer. An answer which is irrelevant, incomplete, mysterious, inconsistent, not construable without a commentary, and unreasonable does not prevail."[6] Kátyáyana also:—"That is no answer which confesses to one count of the declaration, sets up a special exception to another, and makes a denial of a third." The same author explains the reason why [the above] is not an answer:—"In one suit burden of proof cannot rest on both the litigant parties, nor can both obtain the judgment, nor can two answers be offered in proof at once."[7] Here the meaning is this:—In a mixture of the answers of denial and by special exception, proof is due from both parties. Because Nárada declares that, "In

Burden of proof.

[1] Mit. ch. ii. l. 4, p. 1; Vír. l. 22, p. 2.
[2] Mit. ch. ii. l. 4, p. 2; Vír. l. 23, p. 2.
[3] Ibid.
[4] Vyása: see Vír. l. 23, p. 1; Mit. ch. ii. l. 4, p. 2.
[5] Vír. l. 24, p. 1; Mit. ch. ii. l. 4, p. 2.
[6] Vír. l. 26, p. 1, Mit. ch. ii. l. 4, p. 2.
[7] Mit. ch. ii. l. 5, p. 1.

the case of a denial, the proof rests on the plaintiff; in the case of a special exception, [it rests] on the defendant." Therefore, the burden of proof in one suit resting on both, their proofs [must be opposed to each other]. So also in a mixture of answers, by the pleas of special exception and of former judgment, the burden of double proof lies on the defendant alone; for there is a text of Vyása:—"In pleas of former judgment and of special exception, the defendant must exhibit proof."[1] And here, by a text of the same author that, "In a plea of former judgment, by the decree and also by the Judge and the like," proof in a plea of former judgment must be exhibited by the production of the decree, or by those who witnessed the former judgment. Again, in an answer by a special exception [the proof must be exhibited] by witnesses, documents, &c.; so here [in a mixture of special exception and former judgment] also there is opposition to law. In like manner it is to
* ৬. be understood even in a mixture* of three or four pleas. These mixed pleas constitute illegal answers when pleaded simultaneously, but are valid answers when pleaded in order. The order rests on the will of the plaintiff, the defendant, and the assessors. And Háríta [speaks]:—"If a denial and a special exception should be contained together, and if the plea of confession [be made] with any other, then which answer is admissible? In such a case, that should be known as an unmixed answer which may be most important, or conducive to proof. An answer other than this [becomes a mixed one.][2]" 'Becomes a mixed one:' is understood. The meaning of it is that in a suit for gold and clothes (if it is pleaded that gold was not received, but clothes were received and returned,) proceedings should first be taken in regard to gold, afterwards with regard to clothes. The same rule should be observed in regard to the mixture of the pleas of denial and former judgment, and those of special exception and a former judgment. So in the same suit [for gold and clothes], if it is pleaded that gold was received, but that clothes were not received, or being received were returned, or if defendant plead in reference to the clothes, 'I won the cause before,' then in that case proceedings should be taken in reference to clothes only, not in reference to gold, for, although gold is more valuable, there is no necessity of proof in regard to it. When it is complained 'This is my cow; she was missing on a certain day; I find her to-day in this [man's] house;' and where it is pleaded in defence, "The plaint is false; she was in our house even before the time specified [in the plaint]," this is not a void answer, for although here there are the pleas of denial and special exception, they embrace the whole matter in dispute. This is an answer of denial with

[1] Mit. ch. ii. l. 5, p. 2. [2] Vír. l. 29, p. 1; Mit. ch. ii. l. 5, p. 2.

a special exception. Here the proof rests on the defendant, not on the plaintiff. For, says Hárita, "Even in an answer involving a denial and a special exception, the special exception is only to be considered." In like manner, where there are the pleas of denial and former judgment, and those of special exception and former judgment, there is no void answer if they embrace the whole subject-matter in dispute. Here in both cases the proof lies on the defendant alone. There is no matter whatever in which proof lies on both the parties. This will suffice.

Yájñavalkya specifies the order of proof after the answer has been recorded (ch. ii., vv. 7, 8)—"Next, the plaintiffs should immediately have evidence written down in support of the matter in dispute. If it succeed, he wins; if it do not prevail, he fails." This refers to the answer by denial. In other kinds of answer the burden of proof lies on the defendant alone, as Hárita says:—"In answer by [pleas of] former judgment and special exception, the defendant should exhibit proof. In the plea of denial the plaintiff [should exhibit it]. In the plea of confession there is no need of it."[1]

Yájñavalkya thus describes the four-fold character of legal procedure (ch. ii., v. 8):—"This legal procedure is declared to be of a four-fold character in litigation." The four parts of it are explained in another Smriti:—"The plaint, the answer, the proof, and the decision are laid down in their proper order as the four divisions of it; hence [it is] called four-fold."[2]

But this refers to answers other than the answer of confession; for it [the answer of confession] is two-fold, as Brihaspati says:—"In pleas of denial and a special exception, legal procedure should be known as four-fold; but in that of confession it is two-fold."

Recrimination.

Yájñavalkya (ch. ii., vv. 9, 10):—"Until the complaint is cleared, no counter-claim should be allowed to be brought against the complainant; nor should any other be allowed to charge a person already labouring under a charge; nor should the original declaration be allowed to be changed." But in assaults and offences [like theft], a counter-charge is allowable. Nárada:—"That man who, abandoning his former ground of action, has recourse to another, shall, from the confession of his grounds, become the losing plaintiff."[3] The losing plaintiff becomes liable to punishment, but does not lose the suit in law; and this should be understood in reference to civil suits. As the same [author says]:—"In all civil suits there is no failure for a fraud in speech. [For example,] in suits for seduction, land, and non-payment

[1] Mit. ch. ii. l. 6, p. 2. [2] Mit. ch. ii. l. 6, p. 2. [3] Mit. ch. ii. l. 6, p. 2.

of debt, the plaintiff, though he is liable to punishment [for fraudulent speech], does not lose his claim."[1] The latter hemistich is added to illustrate the former. Yájñavalkya (ch. ii., v. 17) :—"When there are witnesses on both sides, witnesses of the first party [are to be examined]. If the first side be invalidated, witnesses of the other side should be examined." *Purvavádinah* (of the first party) [means] of the complainant; *Púrva-Pakshah* (first side) [means] the com-
*c. plaint.* *Adharíbhuté* (if it be invalidated) [that is,] if there be nothing to be proved by reason of the defendants' admission, or by pleading a special cause. The mention of witnesses is for including other kinds of evidence also.

Surety.

The same [Yájñavalkya, ch. ii., v. 10] :—"A substantial surety from each party should be taken for the satisfaction of the judgment." *Káryanirṇayah*, (For the satisfaction of the judgment,) [that is] [who will be able] to fulfil [the terms of] the judgment.

Inadmissible sureties.

Kátyayana thus enumerates those who are inadmissible as sureties:—"A master, an enemy, a person in the employment of the master, a person in confinement, a person sentenced [to a fine], a wayward person, a person [with an inheritance in prospect], a destitute person, a person sentenced to transportation out of the country, a person in the service of Government, anchorites, a person unable to pay the [claiming] creditor and an equal fine to the king, and an unknown person, are each of them incompetent to be admitted as sureties."[2]

*Niruddhah* (a person in confinement), a person chained in irons, &c.; *Samśayasthah* (a wayward person), vicious; *Riktht* (a person with an inheritance) in prospect, such as the son, the grandson, &c.; *Riktah* [means] poor; *Anyatrávásitah* (a transported person), a person banished from a country. Yájñavalkya (ch. ii., v. 52):—"Now no transaction of surety, debt, and giving evidence is recognized between brothers, husband and wife, and father and son; provided they are undivided."[3] Kátyáyana thus ordains if no surety is furnished:—"If no substantial surety able to meet the decision be forthcoming on behalf of plaintiff, he should be kept under surveillance, and at the end of the day [be made to] pay the wages of the guard."[4] The same:—"A twice-born unable to give security should be watched by guards. A Śúdra and the like unable to give security should be put in chains."

---

[1] Mit. ch. ii, l. 7, p. 1. [2] Vír. l. 18, p. 2.
[3] Vír. l. 35, p. 2. [4] Vír. l. 18, p. 2.

Nárada thus describes a suitor with an inadmissible claim :—" That man who, abandoning his former action, has recourse again to another, should, from the confession of actions, be known a false suitor." Yájñavalkya thus describes a party that is in the wrong (ch. ii., vv. 13, 14, 15) :—" He who shifts from place to place, licks his own lips, whose forehead perspires, whose countenance changes colour, who with a dry tongue and stumbling speech talks much, incoherently, who does not heed the speech or sight [of another], who bites his lips, who by mental, vocal, and bodily acts falls into the sickly state, [he] is considered a tainted person, whether [he be] a complainant or a witness [giving evidence]."[1] *Śṛikkiṇí* [means] the ends of the lips.

## EVIDENCE.

Evidence.
Four kinds of evidence.

Now the nature of Evidence. Yájñavalkya (ch. ii., v. 22) :—" Evidence is laid down to be writing, possession, and witnesses. In the absence of any one of these, a form of an ordeal is prescribed."[2] Also, Kátyáyana :—" If one adduces human evidence, and another appeals to a divine test, in that case the king should admit the human evidence, not the divine test. Even if human testimony offered by litigating parties do not cover the whole subject-matter of the suit, it should be received in preference to a divine test, though this latter may cover the whole ground. In litigation, where there are witnesses, no divine test is allowed ; and when there is writing, there should be no ordeal nor witnesses. As for the rules laid down for the *Púgas*, the *Śreṇis*,[3] the *Gaṇas*, and other trades, the evidence [to be used by them] is writing,[4] not an ordeal, nor* witnesses.[5]

* ९ Where a thing is promised and is not given, likewise where a thing is given and taken back, in determining ownership where there are several claimants, in a case of taking back a thing sold, where one having bought a thing does not wish to pay the price, in gambling, [with inanimate objects,] and betting with living animals, —when a dispute arises in any of these cases, proof by witnesses is prescribed, not by an ordeal nor by writing. Where there is [a dispute about] making doors and the possession of the use of doors and ways, and also as regards watercourses and the like, enjoyment alone should be considered,—neither writing nor witnesses."

---

[1] Vír. I. 30, p. 1. [2] Vír. I. 33, p. 2. [3] See p. 4. [4] Vír. I. 35, p. 2.

[5] The following occurs in G in addition :—दत्त्वाऽदत्ते दत्तमिति प्रतिभुत्याऽनर्पिते । तथाऽदत्ते दत्त्वा पुनराच्छिद्य गृहीते । स्वामिनां निर्णये सति एतत्स्वामिकमेतदिति निश्चये सति [which means] :— ***Dattvádatte,*** **when a thing being promised is not given ;** ***Tathádatte,*** **when a gift is resumed ; and** ***Svámináṁ nirṇaye sati,*** **when a determination of ownership is to be made.**

Bṛihaspati mentions the superiority of ordeal in some cases:—"A person committing fraud in jewels, pearls, and coins, a person taking away a deposit, a person [wounding another], and a person enjoying another's wife, are always to be examined by the ordeal of an oath. In charges of deadly sins, if witnesses are present, if a party submit to ordeal, [the king] should not examine witnesses." Vyása:—"If a person says, 'I did not make this document; he forged it.' In such a dispute, disregarding that writing, the decision is to be made by ordeal. If crime is committed in a desolate wood, on a night, or in the inner parts of a house, and if a deposit is denied, proof by ordeal is proper." Bṛihaspati:—"Where a doubt arises in a document or in oral evidence, and where inference is uncertain, there ordeal is the means of clearing it."

The same lays down the choice either of witnesses or ordeal in some cases:—"When a case of robbery [or other *sáhasa*], or of an assault or libel, and in deeds proceeding from violence, either witnesses or ordeal [are admissible].[1] In cases of debt, writing or witnesses or even a little reasoning and the like or proof by ordeal are laid down [by sages actuated] with a desire for the welfare of the subject." *Yuktileśáh* (a little reasoning), even partial proof by inference. *Váchike párushye* (In an assault by words), meaning a slander of the nature of an abuse, such as, 'Thou art a killer of a Bráhmaṇa or the like.'—As for the text of Kátyáyana, "In an assault by words [or slander] and in a dispute for land, no ordeal should be resorted to," this refers to petty libels. The mention of land is only for the sake of illustration of all immoveables; as Pitámaha says:—"In disputes about immoveable property, ordeals should be excluded." This prohibition of ordeals is whenever there are witnesses, &c. And the same writer says to the same effect:—"One should support these [disputes about immoveable property] by witnesses, writing, and possession."—The same:—"When there is no writing, no possession, and no witnesses, and no probability of an ordeal, then the king is the authority. [For] by him all doubtful matters in dispute are determined. The deciding authority (or proof) [in such a case] is the king, since he is the lord of all."[2] Here end the *Vyavahárámátrikás* or introductory essentials of judicature.

## WRITINGS.

Writings.

Now, of Writings. Bṛihaspati [says] on writings:—"Writings are declared to be of three kinds;—those written by the king, those written at a particular place, and those written by an individual with his own hand.

[1] Mit. ch. ii. l. 11, p. 1. [2] Vír. l. 44, p. 2; Mit. ch. ii. l. 6, p. 2.

Their subdivisions again are numerous."[1] As to what Vasishṭha [says] :—"Writings are known to be of two kinds,—royal and popular." Thus is the two-fold division declared. This is made by recognizing no difference between writings written at a particular place, and those written by an individual in his own hand. *Laukikam* [is also called] *Jánapadam* (popular). The author of the Smṛiti Sangraha says:—"Writings are declared to be two-fold, those [made] by the king, and those by the people." Bṛihaspati:—"Writings by the people are seven-fold, [viz.] a partition deed, a deed of gift, a deed of purchase,[2] a deed of pledge or mortgage, a deed of agreement, a bondsman's deed, a money bond, and the like.* The king's orders are of three kinds. Where brothers being divided of their own will, execute a deed of separation among themselves, it is called a partition-deed. Land being given, the writing [making the gift] that is made endurable till the sun and moon exist, and which should not be cut down or stolen, that writing is known as a deed of gift. When one having bought a house, a field, or the like, gets a deed drawn containing an exact statement of the price, that is called a deed of purchase. When one having pledged moveable or immoveable property executes a document containing conditions whether the thing pledged is to be preserved or used, it is called a deed of pledge or mortgage. When the people of a village or a district execute a mutually approved document[2] laying down a rule not opposed to the king's laws, that is called a deed of agreement. That writing which a person destitute of clothes and food passes in a wood, stating, 'I will do your work,' is called a bondsman's deed. A deed of debt which a person having borrowed money at interest himself executes and causes to be executed[3] is called by the wise a money bond."[4] By the word *Ádi* (and the like) are to be understood a deed of purification and the like.

Their divisions.

* ९०

A deed of purification and others are thus spoken of by Kátyáyana:—"When an accusation [brought by the people] is got over by people by doing penance, a writing [made by the people] and attested by witnesses [declaring such purification] is called a deed of purification. When an accusation is brought, the writing passed amongst the leading people, reciting how it ended, is to be known [as] a deed of peace. When a boundary dispute is decided, the writing [reciting the decision] is called a deed of boundary [settlement]."

---

[1] Vír. l. 59, p. 2. [2] Vír. l. 59, p. 2.

[3] The latter part evidently refers to the borrower's surety, whom the borrower causes to enter into the suretyship by a writing at the foot of the original bond.

[4] Vír. l. 59, p. 2.

Prajápati states what is a deed of double bailment:—"If a creditor pledge to another a thing pledged to himself for the same money, he should make a deed of pledge for the same, and should deliver to him the original [deed of pledge]."[1]

Yájñavalkya also (ch. ii., v. 94):—"Having paid the debt, the writing should be caused to be torn, or another should be made for acquittance."[2]

Nárada mentions the difference between the aforesaid writings in one's own hand and those made by another:—"Writings are of two kinds, those made in one's own hand and those made by another, and without attestations or with them [respectively]. Their validity depends upon the usage of the country."[3] Yájñavalkya [ch. ii., v. 89]:—"A writing in one's own hand, though without witnesses, is declared to be evidence, provided it be not caused by force or fraud." *Balam*, [that is] force, duress; *Upadhih* [fraud through] covetousness, &c. The same [author] states a distinction in regard to writings made by another (Yájñavalkya, ch. ii., vv. 84, 85):—"Whatever contract is entered into by mutual consent, there should be writing [made about it] attested by witnesses, headed with the name of the creditor, giving the year, the month, the fortnight, the day [of the month], names, tribes, families of the parties, their scholastic titles, the names of their fathers, &c." *Sabrahmachárikam* (scholastic title), an epithet of respect containing the *Bahvṛich* [or any other Veda; and its branch] as *Bahvṛichah* (a student of the *Bahvṛich* branch); *Kaṭhah* (a student of the Kaṭhah branch of the Yajurveda), &c. The same [author] says (ch. ii., vv. 86, 87, and 88):—"When the terms of a contract are written down, the debtor should sign his name with his own hand, adding, 'What is written above has the assent of me, son of such a one' [86]. The witnesses should sign with their fathers' names before [their own], thus:—'Here I, so and so, am a witness.' These witnesses should be even [87]. Then, at the end, the person who wrote the document should write, 'At the request of both parties, this is written by me, so and so, son of such and such' [88]." *Samáh* (even), [that is even] in number and qualifications. According to some, the particle *a* may be prefixed to the word *Samáh*, thus making *asamáh*, or uneven.[4]

Nárada:—"If a debtor be ignorant of writing, he [may] cause his assent to be written, and if a witness be so ignorant, he should cause his attestation [to be made] by another witness in the presence of all the witnesses."[5]

---

[1] Vír. l. 59, p. 2.

[2] The receipt is to be passed in case the original writing is lost: see Vír. l. 59, p. 2.

[3] Mit. ch. ii. l. 33, p. 1. A deed written by the debtor's own hand requires two attestations.

[4] Vír. condemns the reading *asamáh* or uneven: see l. 60, p. 1. [5] *Ibid.*

Royal Writings.

Yájñavalkya and Bṛihaspati explain the three kinds of royal writings before mentioned (Yájñavalkya, ch. i., vv. 317, 318, 319, 320):—"Having given land or a corody, let the king execute a writing of the gift [317] for the information of future blessed kings. On a piece of cloth or a copper-plate marked above with his seal, [318] the king, having written * ॥ down the names of himself and of his ancestors, and* the dimensions of the gift and a description of its boundaries, [319], should issue a permanent grant bearing date, and his signature made by his own hand" [320]. *Nibandhah* (corody), what is given by the king, &c. out of the produce of a mine and the like. *Pratigrahah* [is] that which is received as a gift, such as land, &c. *Parimáṇam* [means] its dimensions. *Dánam*, or gift, [is] that which is given, such as a house, &c. *Chheda* [means] *boundaries* or its limits. *Upavarṇanam* (its description) [means] the mention of its boundaries, &c. [so as to identify it].

Likewise [Bṛihaspati[1]]:—"When a king, pleased with the services, valour, and the like of any one, grants land, &c. by a writing, that writing is called *Prasádalikhita* (a writing of favour). When, after the decision of a suit by [investigation into the] proofs of both parties, the king gives a writing to the successful party, it is called a *jayapatra* (a writing of success, or a decree).

Vyása speaks of a king's substitute thus:—"The Secretary for Peace and War, by command of the King himself, may write down the royal mandate on a copper-plate or cloth." The same author observes that the king should write his signature of assent to it:—"[The Secretary for Peace and War should write down] the boundaries and measurement, and the king should himself write with his own hand, 'I, so and so, son of such and such a king, assent.'" *Sanniveśam* (boundaries) and *pramáṇam* (measurement); *cha* (and) must be connected with the preceding sentence [or verse].

Vasishṭha mentions four kinds of royal writings:—A *śásana* or mandate should be known as the first. Next is a *jayapatra*, or a writing of success [a decree]; *ájñápatra*, or an edict; and a *prajñapanápatra*, a letter conveying a request. This is the four-fold division of royal writings. That by which a commission is issued to the dependent kings, servants, the governors of provinces, and the like is called an edict. That letter by which a request is communicated to a sacrificing priest, a family priest, a preceptor, and such worthy and revered personages, is called a letter of request."[2] *Śásana* (a mandate) and *jayapatra* (a decree) have been explained before.

[1] See Vír. l. 60, p. 2.

[2] Vír. l. 61, p. 2.

Yájñavalkya (ch. ii., v. 91):—"If a document is in another country, if it is unintelligible, if it is lost, effaced, or stolen; likewise if it is torn, burnt, or cut asunder, [the king] should cause another to be made."[1] Nárada:—"If a document is left in another country, if it is worn out or unintelligible, or stolen; in the case in which it exists, time should be allowed [for its production,] and in those cases in which it does not exist, attestors should be examined."[2] *Drashṭárah*, [means] attesting witnesses.

Old documents.

In their absence recourse should be had to an ordeal, from a text of Kátyáyana:—"When there is no writing or witnesses in a suit, [the king] should prescribe an ordeal." Yájñavalkya [ch. ii., v. 92]:—"The correctness of a disputed or doubtful writing may be established by [comparing it with] something written by the [party writing] with his own hand, and the like; [also] by presumption, by confrontation [of parties], by direct proof, by marks, by previous connexion, by a [probability of] title, and by inference." *Yuktih* (presumption), inference from circumstances; *Práptih* (confrontation) is a meeting of the parties in one place; *Chihnam* (mark), [such as] impression of a seal, &c., *Kriyá* (direct proof), witnesses and the like; *Sambandhah* (connexion), established connexion; *Ágamah* (probability of title), that is, some probable mode of acquisition; *Hetuh* [means] inference [from given premises]. Prajápati:—"The decision in respect of a royal grant should be made with particular care by an inspection of his own handwriting and seal, and the handwriting of the writing."

Brihaspati:—A document executed by a dying person, an enemy, a person oppressed with fear, a diseased person, a woman, an insane or intoxicated person, a person in distress, at night, by fraud, or by force, does not stand good. Where even one witness attesting a writing is infamous, and reproached by the people, or where the writer thereof is of a similar character, it is called a false document."[3]

Invalid writings.

## POSSESSION.

Nárada:—"Possession with pure title becomes proof; with a vicious title, possession does not amount to proof.[4] Vyása distinguishes possession by other adjectives similar to 'having title,' [thus]:—"It is desirable

Possession.

[1] Vír. l. 61, p. 2.
[2] Mit. ch. ii., l. 34, p. 2; Vír. l. 61, p. 2.
[3] Vír. l. 62, p. 1.
[4] Mit. ch. ii., l. 13, p. 2; Vír. l. 64, p. 1.

that possession be five-fold, with a title lasting for a long
* १२ time, continuous, uninterrupted, and* in the neighbourhood of the adverse party."[1]

Mere possession is not sufficient to constitute a valid claim, as Nárada observes:—"He who pleads enjoyment alone, and no title at all, should be considered a thief by pretence of false possession."[2] This should be understood to refer to a period of time fit for recollection [of legal title]; but where it is unfit for recollection, the same author observes that free enjoyment is good evidence. Thus [in the case of a transaction] within the memory of man,[3] it is desirable that enjoyment of land should be based on title [before it is recognized]; [but in the case of a transaction] beyond the memory of man, enjoyment by three successive generations suffices, owing to the absence of proof [to the contrary], even in the absence of title." *Anugamábhávát.* (Owing to the absence of proofs) that is, owing to the impossibility of determining the absence of title by reason of the improbability of meeting with direct evidence [to that effect]. In cases occurring at a time beyond [legal] memory when the memory of a want of title [is handed down] by tradition, the same [author observes]:—"On him, the sinful man who enjoys possession without title even for several hundred years, the king should inflict the punishment due to a thief."[4] As to what says the same author:—"That which has been even unjustly enjoyed by three ancestors, including the father [of the present occupant], cannot be taken away from him, as it has come through three descents in succession," it means that what has been enjoyed by three ancestors, including the father, even without title, cannot be taken away; much less [can that be taken away] where there is improbability of direct evidence. Even in the text of Hárita, viz.:—"When possession may have been enjoyed by three former persons without a good title, dating from its commencement, it cannot be taken away, having passed through three successive generations," the meaning to be understood [is] 'without a title which does not reach the beginning'—and not 'without any title at all.' Again, when Yájñavalkya [ch. ii., v. 28] says, "He who has acquired a title must, when [the title is] impugned, prove it; neither his son, nor his [son's] son, [are required to prove it]: for [in their case] possession carries greater weight," it

[1] Mit. ch. ii. l. 13, p. 2; Vír. l. 64, p. 1. [2] Vír. l. 64, p. 1.

[3] See Mitákshará ch. ii., l. 13, p. 2; a hundred years is given as the time for recollection, from a text in the *Vedas*:—"शतायुर्वै पुरुषः" "Man's age is one hundred." See also Víramitrodaya l. 64, p. 1; Steele's Summary of the Law and Custom of Hindoo Castes [1st ed.], p. 80.

[4] Mit. ch. ii., l. 14, p. 1; Vír. l. 64, p. 2.

means that the acquirer of title will be amerced if he does not prove his title; but his son, &c. will not be amerced [if they fail to prove it]—that is, if they do not succeed in establishing title. This is the conclusion. Thus says Hárita:—"The acquirer of a title not proving it is liable to amercement, not his son, his [son's] son; but both [the son and his son] are liable to be deprived of the thing possessed as well as himself."[1]

Yájñavalkya [ch. ii., v. 29]:—"If a person whose title is impugned should die, his heir should establish it; in such a case enjoyment without title is no proof."[2] *Riktht* (heir), a partaker of the heritage, such as the son, &c.; *tam* [means] to the title.

Possession for a long time is proof: this is contrary [to the conclusion of Yájñavalkya]: because the plaintiff loses even by short possession [of the opponent. This is the difficulty]. Thus observes the same [ch. ii., v. 24]:—"To him who sees another enjoy his land for twenty or his money for ten years, loss [of that thing] occurs."[3] [The difficulty] is thus answered. It only means that the owner shall lose the profits derivable from the land, or the like, for the time that he sees another enjoy it without interruption by himself,—not that he shall also lose the land or the like thing [money, &c.]; unless such an interpretation is made, it would be opposed to the text [quoted above]:—"He who enjoys without a title, &c."

Kátyáyana:—No argument resting on possession should be adduced, by the forcible possessor or his son, in the case of a beast, a woman, a man, &c. This is the law ordained."[3] Nárada:—"A pledge [or mortgage], boundaries, an infant's wealth, a sealed deposit, an open deposit,[4] women, the king's or the *Śrotriya's* property; these are not lost [to the owner] by another's possession [of them]."[5] Manu [ch. viii., v. 146,]:—"A milch cow, a camel, a riding-horse, an animal to be trained, and other things used with friendly assent, are never lost to the owner." *Damyah prayujyate*, [that is] delivered over for the purpose of being broken. [End of *Bhukti* (Possession).]

## WITNESSES.

*१३ Now* [about] witnesses:—In the Ṭoḍaránanda,[6] Nárada says:—

"When matters between two litigant parties are doubtful, they should

---

[1] Mit. ch. ii., l. 15, p. 1. [2] Vír. l. 62, p. 2.

[3] Vír. l. 69, p. 2; Mit. ch. ii., l. 12, p. 1.

[4] Vyavahárátattva pp. 48, 49, describes *upanidhi* as ornaments given for use through affection. See also Manu ch. viii., v. 49.

[5] Mit. ch ii., l. 12, p. 2.

[6] A work compiled under the auspices of Ṭoḍar Mal, one of the ministers of Akbar.

be cleared by means of witnesses who have derived their knowledge by having seen or heard them."[1]

Bṛihaspati declares their divisions :—"Witnesses are declared to be of twelve sorts,—written, caused to be written, concealed, recollected, a member of the family, a messenger, a spontaneous witness, one in answer, another man employed in the business, the king, his superintendent, and likewise the [people of the] village.[2]" *Likhitah* (written)—entered by the plaintiff in a deed; *Lekhitah* (caused to be entered) [in a deed] by the defendant at plaintiff's request; *Gúḍhah* (concealed), one made to hear [the defendant] behind partition or the like; *Smáritah* (recollected), reminded again and again of the business; *Yádṛichchhikah* (spontaneous), a witness coming to give evidence of his own accord; *Uttarah* (one in answer), speaking after witnesses upon hearing or being told [their evidence]; *Adhyakshah* (superintendent) the judge; and this is meant to include the assessors and other [members of the Court] by reason of the text of Kátyáyana :—"The scribe, the judge, and assessors in succession, [the one in the absence of the other]."[3]

The same (Bṛihaspati) [says] :—"There should be nine, seven, five or four, or even three (witnesses). If they be Śrotriyas (*i.e.* learned in the *Vedás*), then two should be examined. A single witness should never be examined. *Written* and *concealed* witnesses must be two [of each sort]; *spontaneous, recollected, men of the family,* as also those called *in answer,* must be three, four, or five; a single witness is sufficient for proof, if he be a messenger, an accountant, one employed in the business, the king, or the judge. Of the *written* and such-like witnesses one only is enough [if examined] with the consent of both parties, as Yájñavalkya observes. [ch. ii., v. 72]:—"With the consent of both parties, even one person becomes [sufficient as] a witness, if he be proficient in the duties laid down in the Śrutis and Smṛitis."[4] Vyása :—"Even one witness whose actions are pure, who is proficient in *Dharma,* and whose word is known to be true[5] is enough, especially in criminal proceedings. *Anubhútavák* (whose word is known to be true), who is generally found to speak the truth. Kátyáyana says that even one witness is good in cases of deposit and the like even if he be not an *Ápta,* or always truth-telling witness. "In a very secret deposit, even a single witness is declared [sufficient] evidence; in things borrowed for use even one individual sent by the plaintiff may become a witness."[6] *Yáchitam*

Their number.

One witness.

[1] Vír. l. 44, p. 2. [2] Vír. l. 45, p. 2. [3] Vír. l. 45, p. 2.
[4] Vír. l. 47, p. 1. [5] *Id.* [6] Vír. l. 47, p. 1.

(things borrowed for use) ornaments, &c. such as earrings and the like brought on the occasion of a marriage, &c.

The same authority considers one witness sufficient in disputes about sales. "He by whom an article for sale is made, should be made to prove it. In a dispute about it he alone is declared to be proof."[1]

And Vyása declares their qualifications [*i.e.* of witnesses] :—"Persons endued with a sense of justice, persons having sons, persons born in distinguished families,[2] persons of pure extraction, truth-tellers, persons performing the rites prescribed in the Vedás and Smṛitis, persons devoid of anger and envy, Śrotriyas (persons versed in the Vedas), persons not dependent upon others, learned persons, persons residing in the place, and people in the prime of manhood should be made witnesses in [transactions of] debt, &c. by the wise." Nárada :—"Among Śreṇis,[3] the heads of the *Śreṇis*, among Vargás, heads of *vargas;* amongst outside people, persons living outside, and women among women, become witnesses."[5] Kátyáyana thus mentions the *vargis* (heads of a *varga*) :—"The Lingis (persons wearing a *lingæ* or a symbol), the Śreṇis, the Púgas[4], and other communities of traders, so also members of other communities : these Bhṛigu calls *vargás* (guilds or tribes). The Náyakás or leaders of the communities of Dásas [or slaves][6] the Cháraṇas (bards), the wrestlers, those who live [by driving] of elephants, horses, and carriages, are called *vargis*. Yájñavalkya speaks of witnesses even of different castes [ch. ii., v. 69]:—"Witnesses [it should be known] ought to be more than three; [they should be] devoted to the performance of rites prescribed in the Vedas and Smṛitis; of the same caste, of the same class; [failing these] all witnesses of any caste or class."

The same [author] mentions inadmissible [witnesses] [ch. ii., v. 70, 71] :—"A woman, an infant, an old man,[7] a gambler, an intoxicated person, a person possessed by an evil spirit, an infamous person, a performer on the stage, an infidel, a forger, a deformed person, one degraded from caste, a friend, one interested in the subject-matter of the suit, a partner, an enemy, a thief, a ferócious person, one known to be a liar, an outcaste, and the like are inadmissible* witnesses."[8] *Nirdhútah* (an outcaste) a person cast out by his

[1] Vír. l. 47, p. 2.

[2] The original, which is *mauláh*, means also according to the Madanaratna, 'persons acquainted with past transactions,' and according to another author 'persons of respectable character.' See also Víramitrodaya l. 46, p. 1.

[3] See above, p. 4. [4] See above p. 4. [5] Vír. l. 47, p. 1. [6] Vír. l. 45, p. 2.

[7] Above 20 years of age: Mitákshará l. 28, p. 1. [8] Vír. l. 47, p. 2.

kinsmen. The words [an outcaste] 'and the like' include slaves, &c. Bṛihaspati:—"The mother's father, the father's brother, the wife's brother, and mother's brother, the brother, the friend, and the son-in-law are bad witnesses in all disputes."[1] Nárada:—"He who, not being mentioned, comes of his own accord and speaks is technically called a selfspoken man. He is not fit to be a witness."[2] Kátyáyana:—"Should one of the witnesses recorded or summoned by a party utter a falsehood, all those witnesses become incompetent witnesses."[3]

Exceptions.

Nárada speaks of the competency of even those [described above as inadmissible] to give evidence in some cases:—"Slaves, wicked men, and others who are declared to be bad witnesses,—these also may be admissible as witnesses, regard being had to the gravity of the matter [in dispute]." In the absence of [other] witnesses, [says]—Manu [ch. viii., v. 70]:—"If there be no witness, even a woman, an infant, an old man, a pupil, or a kinsman, or a slave, or a servant may be admitted to give evidence." Yájñavalkya [ch ii., v. 72] "In adultery, theft, assaults, and a *Sáhasa* (a heinous offence), any person may be a witness." Although adultery, &c., are included in the term *Sáhasa*, they are separately mentioned to include adultery, &c., committed in secret. Uśanas:—"A slave, a blind person, a deaf person, a leper, a woman, a minor, an old person, and the like,—even these, if uninterested, are deemed competent witnesses in a *Sáhasa*, [or a heinous offence]." *Anabhisambaddháh* (uninterested) impartial.

Objections to witnesses.

Bṛihaspati:—"When witnesses summoned in an action are faulty, the adverse party may expose [them]. But the litigant attributing faults to faultless witnesses is liable to pay a fine equal to an equal amount."[4] *Vádí* (litigant) here means the defendant. *Tatsamam* (of equal amount), equal to the sum claimed in the action.[5] Vyása:—"The faults of witnesses are to be stated in court by the defendant; when they are all committed to writing; they being read, [the witnesses should be required] to reply to them." The meaning is that having regard to the faults set in writing, the witnesses should be required by the assessors to give [satisfactory] explanation on the subject. The same:—"In the answer by admission,[6] witnesses are never fit [to be called]; [in an answer given] otherwise, the defendant should, by evidence, rebut [the plain-

[1] Vír. l. 50, p. 2. [2] Vír. l. 47, p. 2. [3] Vír. l. 48, p. 1.

[4] Vír. l. 51, p. 1.

[5] According to the author of the 'Víramitrodaya' and Aparárka, a commentator on Yájñavalkya, 'equal to the fine to be paid by a false witness.'

[6] One of the four kinds of answers: see p. 11, line 2.

tiff's witnesses]. If the defendant does not clearly rebut, he must pay a fine; the witnesses if rebutted [or contradicted], are to be rejected as improper witnesses. In like manner, if the plaintiff sits quiet [in the presence] of the [opponents proper] witnesses, he must pay a fine as laid down by law."[1] *Atonyathá* (Otherwise), means in an answer except that of admission. *Bhávaníyah* (Rebut) that is he should make them admit their faults; or should bring their faults home to them. *Kriyayá, i. e.* by evidence. The rebutting is to be as clear as possible; this is the meaning. But the text "objections to or faults of witnesses so established by the people in general are to be admitted by the Assessors [as such], and are not to be considered as requiring proof lest there be the impropriety committed [of requiring an endless series of proofs]"[2] has reference to witnesses publicly known to be truthful. In case of these disqualifications being unknown to the defendant, the same author says:—"Those faults in proof should be exposed by the litigant; and those *concealed* should be made clear by the assessors in time by the [aid of the] *Śástra.*"

The meaning is that *concealed* faults should be exposed by expounding the Śástra before the examination of witnesses [begins]. Thereafter says Brihaspati, they should not be mentioned. Thus—"Whatever faults in or objections to a document or witnesses there may be, they should be declared at the trial before examining witnesses; if they be afterwards spoken to, they should not be reckoned as faults"[3] *uktán,* that is the speaker[4] beginning to speak [should be stopped]; this is the meaning.[5] The termination *ktah* [in the word *uktah* above] denotes an agent according to the aphorism [of Paniṅi] "And the affix *ktah* applied to an action begun, denotes, an agent." [ch. iii., qr. iv. 1.] In such a case, their punishment is thus stated by Kátyáyana:—"He who, when the matter in dispute has been deposed to, may object, as disqualified, to witnesses not objected to before, and shall not give reasons in support of his objections, shall be fined in the lowest amercement."[6] If the witnesses are unable to clear themselves of the objections brought against them, the party interested must do it, as Brihaspati says,—

---

[1] Mit. ch. ii., l. 29, p. 2; Vír. l. 51, p. 2.

[2] This logical offence is technically called *anavasthá,* a mode of proving by an endless series of statements (See a quotation from Vyása in the Víramitrodaya on the subject of witnesses, l 51, p. 1.)

[3] Vír. l. 51, p. 2.

[4] This is properly a passive participle, but according to a rule of grammar quoted in the text it must be taken here in an active sense.

[5] This evidently refers to assessors: See Víramitrodaya l. 51, p. 2.

[6] Vír. l. 51, p. 2.

"He whose documents or witnesses are found fault with in an action, cannot gain his cause, until he clears up the faults found in it."[1] *tat* (It) signifies document &c.

Kátyáyana* prescribes punishment to suborners of false wit-
*१५ nesses [thus]:—He who with a desire to gain a cause, sets up false witnesses, shall be deprived of every thing belonging to him, and should also be made to lose his cause."[2] *Nirvishayam* [that is] lose the subject-matter of the claim. Nárada describes the means for determining [who are] false witnesses, "He who appears as it were uneasy by reason of the wickedness of his own crimes, shifts from place to place or runs after [another person], who suddenly coughs much, and likewise draws his breath now and again, who scratches the ground with his feet, who shakes his hands and clothes, the colour of whose countenance changes, and whose forehead sweats, whose lips become dry, who looks above and about him, and who talks much irrelevantly, in a hurried manner, and without being questioned, should be known as a false witness. Such a wretch should be punished severely."[3]

Subornation of Perjury.

Kátyáyana and also Manu [ch. viii., v. 87, 79, 80] state the mode of examining witnesses:—"In the forenoon, the Judge being purified, should ask the twice-born to give true evidence in the presence of [a symbol of] divinity and Bráhmaṇas, their faces being turned to the north or to the east [87]. The witnesses being assembled in the middle of the Court-room, in the presence of the plaintiff and the defendant, the judge should examine them, after addressing them all in the following manner [79]. All that ye know to have reciprocally taken place between the parties in this case, declare with truth, for your evidence in this case is [required]"[4] [80].

Examination of witnesses.

In disputes about kine, horses, and the like, the same [Kátyáyana][5] requires also the presence of the subject-matter of the claim:—"In the presence of the plaintiff and the defendant, and near the subject-matter of the dispute, the Judge should require them to produce the evidence of witnesses openly, and never behind. [Evidence may sometimes be taken] in the vicinity of the subject-matter in dispute even in the absence of them both. This rule holds in [the case of] quadrupeds, bipeds, and immoveables. In disputes about articles of weight, of

---

[1] Vír. l. 51, p. 2. [2] Vír. l. 52, p. 1.

[3] Vír. l. 52, p. 1; he should not be fined, but otherwise punished so as to deter perjurers.

[4] Vír. l. 52, p. 2. [5] Id.

number, and of measure, the judge may ask witnesses to give their evidence even in the absence of the matters in dispute: not in other cases."[1] *Tayorapiviná kvachit* (Sometimes, even in the absence of them both.) [The meaning is that] even without the presence of the plaintiff and defendant, [but] in the vicinity of the thing in dispute in some cases, [such as in the case of] quadrupeds, &c.; *Taulyam* (articles of weight), things fit to be weighed, such as gold, &c. *Gaṇimam* (Of number), fit to be numbered, such as coins, &c. *Meyam* (of measure) fit to be measured, such as rice, wheat, &c. *Abhávepi* (even in the absence of) that is of the matter in dispute [such things of weight, &c.], *kriyákáreshu* (in disputes) [that is] in legal proceedings. In cases of murder the depositions of witnesses should be taken in presence of Śiva,[2] as the same[3] author observes:—"In cases of killing living creatures, witnesses should be required to give their evidence in presence of Śiva, in the absence of any marks of killing; but if there be marks, they [the marks] should be exhibited and proved."[4] *Tat* (that), signifies the depositions of witnesses which should be taken [in the presence of Śivá] in the absence of any marks of killing; *Anyathá* (otherwise) when there are marks of killing. The same:—"Procrastination must not be made by the king in examining witnesses; great sin arises from procrastination, such as failure in performing religious acts [during the time lost][5]."

Nárada:—"Having called witnesses and bound them firmly by an oath, he should examine them all separately, all of them being known to be following the rules laid down by law, and being acquainted with the matter in dispute."[6] Vásishṭha,—"That act which was seen by all of them together should be told by them in the same manner; but that [which was seen by them] separately should be related separately by each. But where an act has become known to witnesses at different times, there witnesses must be examined separately. Thus is the rule laid down."[7]

Oaths.

Manu [ch. viii., vv. 113,102];—"A Bráhmaṇa should be required to swear by [his] truth, a Kshatriya by his riding animal and his weapons, a Vaiśya by his kine, grain, and gold, a Śúdra by [imprecating on his head if he speak falsely] all sins [113]. The Bráhmaṇás who tend herds of cattle, who trade, who practise mechanical arts, who live by dancing and singing, who are hired servants or usurers, should be dealt with as [if they were] Śúdras [102]." "Those who are fallen from their proper duties, who live upon food given by others, and who long for the pri-

[1] Vír. l. 52, p. 2. [2] Siva being the destroyer. [3] This is also Kátyáyana.
[4] Vír. l. 52, p. 2. [5] Vír. l. 53, p. 1. [6] Vír. l. 53, p. 1. [7] Vír. l. 53, p. 1.

vileges of the twice-born, should be treated as Śúdras".[1] 'By thy speaking falsely, thy truth will perish': [this in the case of the Bráhmaṇa] and the like; such is the meaning. The test for determining the truth or falsehood in the depositions of witnesses is thus declared, [by Bṛihaspati].—"The king should declare the matter in dispute as proved, if the evidence be warranted by or conformable to, the place, time, age, thing in dispute, and the name and caste [of the deponent]."[2] Yájñavalkya lays down a rule for deciding when witnesses make contradictory statements. [ch. ii., v. 78].* "If the evidence is contradictory, the testimony of the majority prevails; if the witnesses be equally divided, the testimony of the virtuous, and if the virtuous are [equally] divided, the testimony of the most virtuous should be admitted."

Test of evidence.

*१६

The same author prescribes punishment for not deposing after having agreed to give evidence [ch. ii., v. 76] :—"A person not giving evidence should be made to pay by the king the whole debt together with a tenth added thereto on the forty-sixth day."[3] *Sarvam* (the whole), including interest. *Sadaśabandhakam* (together with a tenth) that is, together with a tenth share added thereto. The tenth share is to be received by the king, and the creditor should receive the debt with interest as stated in the Mitakshará.[4]

The same lays down punishment for one who having knowledge [of the matter in dispute] refuses to give evidence as a witness [ch. ii., v. 82] :—"He who having been called upon to bear testimony conceals it under the influence of passion should be fined eight-fold; [if a Bráhmaṇa] he should be expelled."[5] Such a witness is to be fined eight times the amount of the fine to be inflicted on the party losing the suit. A Bráhmaṇa unable to pay the fine is to be expelled. According to the Mitákshará,[6] the Kshatriyas and other [lower orders] should be made to work at their own proper occupations. Manu [ch. viii., v. 108]:—"That witness who having given evidence suffers from a disease, or from fire, or from the death of a relation, within seven days, should be made to pay the debt and a fine." Yájñavalkya [ch. ii, v., 80]:—"Even when evidence has been given by witnesses, if other more excellent witnesses, or double the number of witnesses first examined, should depose contrary to what they have done, the first witnesses become false:"—Nárada "After a cause has been decided,

[1] Vír. l. 53, p. 1.
[2] This text is referred to Brihaspati: see Vír. l. 54, p. 1.
[3] Vír. l. 54, p. 2.
[4] Mit. ch. ii. l. 29, p. 2.
[5] Vír. l. 57, p. 2.
[6] Mit. ch. ii. l. 31, p. 2.

proof, whether by documents or witnesses shall become useless, unless the same were made known before."[1] Yájñavalkya speaks of a permission to give false evidence in some cases, and of a penance to be performed in consequence [ch. ii, v. 83]:—"Where men of the four classes would be liable to suffer capital punishment [if truth were spoken], there indeed the witness may speak untruth; for the purification from that offence, an oblation of rice should be presented to the goddess Sarasvati[2] by the twice-born."[3] Vishṇu prescribes the [following] penance for a Śúdra:—"And a Śúdra should give one day's fodder to ten cows.'[4] *Aikáhikam* (one day's fodder) that is as much as will be sufficient to feed them a [whole] day.

[*End of the Section*—WITNESSES.]

---

[The disquisition on *Divya* (ordeals) is omitted in the translation as it does not form one of the eighteen titles of law or procedure laid down by Nílakaṇṭha; and because also it is now practically useless. *Sanskrit* students will find the original in Part I. pp. 16—30. Oaths form one of the ordeals; but as they are now resorted to in the ordinary administration of justice, especially civil justice under Act X. of 1873, (the Indian Oaths Act,) Nílakaṇṭha's observations on that subject are translated and are now laid before the English reading public.]

---

## OATHS.

* Manu [ch. viii., v. 113]:—"A Bráhmaṇa should be sworn in
*३० [the name of] his veracity; a Kshatriya, of his riding animal or his weapons; a Vaiśya, of his kine, grain, or gold; [and] a Śudra, of all sins." Bṛihaspati:—"A man's veracity, riding animal, weapons, kine, grain and gold, the gods, the feet of Bráhmaṇas, and the heads of his son and wife, these are the [forms of] oaths always serviceable in small disputes. In the case of *Sáhasas* (heinous offences) and imprecations, the inquiry should be by ordeal."

Yájñavalkya [ch. ii., v. 113]:—"There is no doubt but that he is pure on whom no frightful calamity by the act of God or of the king falls within fourteen days [from the time of his taking oath]"[4] *Ghorám*, (great,) as according to the Mitákshará [a difficulty] of small consequence is unavoidable by mortals.[5] Also Kátyáyana says:—"He to

---

[1] Vír. l. 34, p. 1.

[2] She being the goddess of speech which has been polluted by an untruth.

[3] Vír. l. 58, p. 2.

[4] The Víramitrodaya says 'within the fourteenth part of a day', but this is evidently wrong from the expression '*Saptáha* [seven days]' used further on in the same sense.

[5] Mit. ch. ii., l. 45, p. 1.

whom no frightful calamity, by the act of God or the king, happens within fourteen days [from the time of his taking oath] is to be considered as pure by his oath." *Vyasanam*, misfortune; *Ghoram*, causing great suffering, as according to Váchaspati Miśra and Smárta-Bhattáchárya, a [human] body is necessarily liable to small accidents.

Again, Kátyáyana:—"Now in the case of contradiction of the oath accompanied with misfortunes by the act of God within two weeks, the thing claimed should by all means be caused to be given together with a fine. When to him [*i. e.* the performer of the ordeal] alone, and not to all, happens disease, fire, or the death of a near relation, he should be made to pay the debt and a fine. Fever, dysentery, boils, great pain in the deep-seated bones, diseases of the eyes, or of the throat, or madness and headaches, and a fracture of the arm, these are the diseases to which mortals are subject [by the wrath of] God."

As [it is stated that] a contradiction of an oath by death of a kinsman, &c. [takes place], when [that calamity happens] to him alone, plagues and such [diseases] are excluded. The words 'to him alone' show that diseases [happening] to the [party] challenged, and not to his sons, and such others, are a sign of contradiction [of oath]. That that [calamity] should be great and not small has been already said. It is by a [similar] reasoning that Váchaspati Miśra says:—"Diseases and the like happening to the challenged [party], only when great, are a mark of failure." For the same reason the death of a near relation is mentioned, but not his disease or the like.

## DETERMINATION OF HERITAGE.

Now, ownership useful in the determination of heritage [is expounded.]

That [ownership] is a special capacity produced by the acts of purchase, acceptance, and the like.[1] Its being created by purchase, and the like is understood from the people's transactions, and [does] not [proceed] from law.[2] Because even those ignorant of law know it. Also because tracing it to law is liable to [the logical objection of] cumbrousness. In the *Nayaviveka*, Bhavanátha is of thesame opinion.

[1] The definition given by Jímútaváhana is "यथेष्टविनियोगार्हत्वेन शास्त्रबोधितत्वम्." which means "ownership, implies the quality [in the object owned] of being used [by the owner] according to his pleasure, and arises out of law." The definition which the commentator of Jímútaváhana would adopt is that of the Naiyáyikas, viz. अतिरिक्तः पदार्थः *i. e.* a thing beyond the seven categories or substances of the Nyáya philosophy. See Jím. p. 11, lines 15-17. Vír. l. 165, p. 1, line 11 says: "यथेष्टविनियोगार्हतावच्छेदको धर्मः स्वत्वमिति." which means "ownership is a property indicative of the quality [in the object owned] of being used according to pleasure."

[2] Jím. p. 25.

As to what Gautama [says]:—"Ownership [arises] by heritage, purchase, partition, taking [of unowned things], finding [of treasure-trove]; to the Brâhmaṇa, acceptance is an additional mode [of acquiring ownership]; to the Kshatriya, [obtaining] by conquest,[1] gain [by commerce and service], for the Váiśyas and Śúdras [respectively]," this text is [merely]* an exposition of the causes accepted by the people. For people use the term *riktha* [heritage] for what becomes one's own by the mere extinction of the [previous] owner's property therein. The word *mâtra* (mere) is used to exclude purchase, acceptance, &c. [Therefore] here, [in the text of Gautama] in the extinction of the owner's property, lies the capacity of the term *riktha* [heritage]; because it [*riktha*] is associated with purchase, and the like [which are] causes producing ownership.[2] Also because of the logical rule that the apprehension of the object (substantive) cannot be without taking in the property (adjective).[3]

* ३१

Dháreśvaráchárya says that the father being alive, the sons, &c. having no ownership previously produced in his property, their ownership is generated by partition. The author of the Smṛiti-Sangraha [says the same].[4] [But] that is not so. Because by the text, "by birth itself ownership of wealth is gained,"[5] it is to be understood that the birth of a son is the cause of his ownership in the father's wealth, which is known as ownership arising from sonship; because also of the text of Yájñavalkya [ch. ii., v. 121]:—"The ownership of both father and son is the same in land, a corody,[6] or wealth received[7] from the grandfather." This cannot be [construed

[1] Vír. l. 161, p. 2, would include wealth obtained by fines and the like, and in the case of a ruler this seems to be proper.

[2] In the case of *Riktha*, extinction of the owner's property is the cause from which arises ownership to the *Riktht* [to the inheritor], just as purchase gives it to the purchaser, acquisition to the Bráhmaṇa, &c.

[3] The logical rule here referred to, when written in full, is नागृहीतविशेषणा बुद्धिर्विशेष्य उपजायते, which means, 'the perception of an object cannot take place without a perception of its properties.' (See the Laghumanjúshá of Nágeśa Bhaṭṭa in the chapter styled *Námárthaváda*. One of the examples usually given is that of Daṇḍi, (the holder of the stick). One cannot know the Daṇḍi until he knows that he has the Daṇḍa. The attribute, therefore, must be known first. The extinction of the owner's property is the attribute or quality from a knowledge of which ownership in the inheritance will be understood. Therefore the capacity of a word lies in the quality, not in the thing; this is the principle of the Mimáñsakás.

[4] Jímútaváhana, who is a follower of Dháreśvaráchárya on the question of the creation of ownership to some extent, says, सम्बन्धिनिधनमेव स्वत्वकारणम्, which means 'the death of the [previous] owner is the cause of the ownership.' See Jím. p. 21.

[5] This text is referred to Gautama. See Mit. ch. ii., l. 47, p. 2.

[6] An allowance received from a king: see Vír. l. 175, p. 2.

[7] The word is *dravya*, which signifies property of any kind.

to] mean that the cause of the ownership is found in the grandfather's death, [and] not in the birth of a son. For [in that case] such ownership would be wanting in case of a grandson not born up to the time of his [the grandfather's] death. Strictly speaking, the word *grandfather* is indicative of a class, [not of the grandfather alone]; otherwise there would arise an absence of equal ownership, [of the great grandson] in the [wealth] received from the great-grandfather, &c.[1]; and because the subject [is land], and its adjective is [received from the grandfather].[2] As for the text of Devala, "The father being dead, the sons should divide the father's wealth; for, so long as the blameless father lives, their ownership does not arise,"[3] the former half of this text is indicative of the time of partition, from the use of the potential form [of the verb 'divide']. The latter half is commendatory of [the partition time,] [which describes the time of partition to be after the father's death], and indicates [the sons'] dependence, not their want of ownership. By this mode of interpretation, the text of Śankha, viz., "While the father lives, the sons should not divide the wealth, even if they should acquire it subsequently [to their birth]; inasmuch as the sons are not independent in respect of *Artha* (worldly transactions) and *dharma* (religious-rites)"[4] is also [thus] explained. Here the mention of *dependence* [in the second half of the text] is with the view of strengthening the foregoing prohibition. The construction [of the passage] is *Yadyapi taih paschát adhigatam* (even though by them gained subsequently). *Taih* (by them), by the sons. *Paschát* (subsequently), that is, after their birth. *Adhigatam* (gained), that is, acquired by acceptance and the like. The proposition in brief is this:—Notwithstanding the undisputed ownership of the sons in their own acquisitions, they are dependent in regard thereto; how much more so [must their dependence be] in regard to acquisitions by the father. And this dependence has reference to partition, [the performance] of voluntary rites, dealings, and the like. Therefore Hárita says, "While the father lives, the sons have no independence in respect of the receipt and giving of property, partition [of wealth], or of passing a censure."[5] By the words *Ádánavisarga* (receipt and alienation), all transactions are intended. *Ákshepah* (passing a censure), according to Madana, [means] reproving female slaves, &c. As for the text "The father alone is master of all gems, pearls, and

[1] The term Ádi (and the like) seems to have been inadvertently put.

[2] This rule is illustrated by the example "ग्रहं संमार्ष्टि" (wipe the cup [wherein the Soma juice is kept]). Here *graha*, or the cup, is in the singular and yet it is indicative of a class. And therefore by the text "ग्रहं संमार्ष्टि" the wiping of all the cups is to be understood.

[3] Vír. l. 161, p. 1. [4] Vír. l. 161, p. 1 and Vya. M. [5] Vya. M. and Kam.

corals; but neither the father, nor the grandfather is so of all immoveables,"[1] it signifies the father's independence only in wearing and otherwise using earrings, rings [&c.], but not in giving or otherwise [alienating them]; nor does it mean to exclude the birth of a son as the cause of ownership. The same meaning is also made manifest by the mention of gems and the like, which are not destroyed by use. Hence in the text, "Though immoveables and bipeds have been acquired by the man himself, there is no giving away or selling them without convening all the sons,"[2] the prohibition applies only to their gift, sale or the like, [and] not to their use. Therefore, the prior undefined ownership of many brothers, &c. is defined [and made known] by partition. According to some,[3] by the extinction of prior joint ownership in wealth [through partition], a particular ownership is created in portions of it; but, the idea of the extinction of a prior ownership and the creation of a new one, involves [the logical fault of] cumbrousness; [it is better,* therefore, to conclude] that the particular ownership which was created in a portion, was [only] made known by partition as subsisting in a particular thing.[4]

* ३२

To return to the subject. *Bráhmaṇasyádhikam labdham*, some [interpret this to mean], 'what is obtained by acceptance is productive of more fruit to the Bráhmaṇa.' But the proper [interpretation] is that besides inheritance and the other modes [of acquisition mentioned in the earlier part of the text], acceptance is an additional mode for the Bráhmaṇa alone; [and] similarly conquest and the other [modes mentioned] are [additional modes] for a Kshatriya, and the others [*i.e.* Vaiśyas and Śúdras respectively]. In conquest also, where there is ownership of the conquered in houses, lands, money, or the like, therein only arises the ownership even of the conqueror; but where the conquered has a right to taking taxes [only], the conqueror has even the same, and no ownership. Therefore it is stated in the sixth

[1] This text is referred to Vishṇu by Kamalákar. Mit. ch. ii., l. 47, p. 1; Vír. l. 161, p. 2. Nílakaṇṭha's interpretation of this verse is different from that of Vijñáneśvara and the Víramitrodaya. The former takes the words मणिमुक्ताप्रवालानां (gems, pearls, and corals) as illustrative of only those moveables which do not deteriorate by use and so far resemble immoveables; while the latter take the same to be illustrative of moveables in general. Jîmútaváhana on the other hand would refer this verse to property acquired by the grandfather, like his predecessors, who maintain that ownership is created by partition; see Jîm. p. 56.

[2] This is attributed to Nárada by Kamalákara, see Mit. ch. ii., l. 47, p. 2; Vír. l. 163, p. 2.

[3] Nílakaṇṭha here refers to Vijñáneśvara and the Víramitrodaya. For the lucid disquisition of the latter on this subject see Vír. l. 169, p. 2.

[4] The manner in which and the period when ownership is created has formed a very fruitful subject of discussion with Hindu jurists. It will be noticed in the Appendix.

book [1] of the PU'RVA MI'MA'NSÁ], "The whole earth cannot be given away by the king of the world; neither the [whole] *Maṇḍala*[2] (dependency) by the ruler of that dependency." The ownership in each village, field, and the like of the whole earth or the dependency belongs solely to the respective *bhúmikas* or landlords. The ruler has only to take the taxes. Hence in what is now technically called a gift of land, &c., a gift of the soil is not accomplished, but only a grant of due allowance [is provided]. But in purchases made from the *Bhúmikas*, or owners of the soil, even ownership in houses and soil accrues. Therefore, [to the giver of such land] there is also the fruit of the gift of the soil. *Nirvishṭam* is what is acquired by usury, agriculture, commerce, tending of animals; and [secondly] what is acquired by service. *Nirveśa* has [two significations], service and trade [as given] in a lexicon.[3] *Bhṛiti* means service; *Bhôga* means usury and the rest. Here the first mentioned [of the additional sources of gain] is for the Vaiśya, and the second [service] is for the Śúdra.

Hence sale and the like are causes of ownership from the manner of the world's dealing; [not from the *Śástra* or law.] And in this way the popular practice of [ascribing] ownership over the calf, &c. born of one's [own] cow, &c. becomes consistent. But it would not be so, if the means of ownership had to be traced from the *Śástra*, because the *Śástra* does not mention the birth from one's own cow &c., as one of the sources of ownership. But, [it may be asked] 'may there be no ownership in daughters, sons, &c. begotten on one's [own] wife, as there is in the offspring of one's [own] cow and the like?' [And if it be said that] this is what is desired, then this would be at variance with the proposition in the sixth [chapter of the Púrva Mímánsá], which states that although the gift of a daughter, son, and the like would follow from the precept [of the Veda enjoining] the gift of the whole by the text *Viśvajiti sarvasvam dadáti i.e.* 'in a *Visvajit* sacrifice, the whole property should be given, yet the daughter, the son, and the like should not be given.' [The answer is that] it is not so; because there being no ownership over a wife as there is in a cow, &c., there cannot be any property in

[1] See pp. 742, 743 of the Mímansá Darśana, with the Commentary of Śabara Svámin, edited by Pandita Maheśáchandra Nyáyaratna, in the *Bibliotheca Indica*. The Mímánsá aphorism runs thus:— "न भूमिः स्यात्सर्वानविशिष्टत्वात्" ॥ *i. e.* [Therefore] the [whole] earth [is] not grantable, [because] to all it [is not] uncommon [for enjoyment]."

[2] The lowest Maṇḍala consists of twelve principalities of a नृप (chief), see ch. viii. of Kámandaka's Nítisára. The dimensions of the territories of a नृप are thus given:— चतुर्योजनपर्यन्तेष्वधिकारी नृपो भवेत्. which means "A *nṛipa* is the Governor of a district [measuring] four *Yojanas*"

[3] See above, also Amarakośa, [ch. iii, sec. iii. v. 214], Bombay Edition of the year 1877, p. 336.

the children begotten on her.[1] [If it is again objected that] among people, the cause of ownership is ascribed solely to production from the thing [cow, &c.] owned; and that in the wife, ownership is [produced] by acceptance; [the answer is that] that cannot [be]. [For] amongst Kshatriyás and others, acceptance being absent,[2] ownership in their wives is absent, [and therefore] its absence in their children. Therefore since the text [Yájnavalkya ch. ii., v. 20] "This law is propounded by me in regard to sons equal by class,"[3] restricts the taking of an adopted son solely to one equal in class, the acceptance of an adopted son by Kshatriyás and the rest is [in a] secondary [sense]. It is not possible [to take] that acceptance [to be in] the primary [sense] in the case of Bráhmaṇas; for [in that case] in the [same] rule,[4] there would be two interpretations [of the same word, viz., acceptance] at the same time [which is illogical.[5]] It cannot be said that a Bráhmaṇa alone is entitled to the rite of accepting a son, and that a Kshatriyá and the other [two classes] are not [so] entitled; for their authority to accept [such a son] is determined by the texts of Śaunaka and others, such as "A daughter's son, as also a sister's son, are given even to the Śúdra."[6] In the same way in the marriage of a Bráhmaṇa with the daughter of a Kshatriya or another [of the lower classes] by the Bráhma rite, [both] the gift and acceptance must be admitted to be in a secondary sense. In other [marriages], its primary quality [will have to be admitted]. Thus there will be two interpretations of the same term [in the same text], which is illogical. The custom of marrying amongst the Kshatriyas by the Bráhma rite is admitted by all. Therefore the Miśra in the Tantraratna describe the gift of a son, &c. [to be in a] secondary [sense]. Nor can ownership be inferred from the popular use of such language as one's own wife, son or daughter; for [it is possible in such cases] to explain [the use of the term *sva* (one's own)] by understanding it in the sense of kindred, as [is done, when we say] 'one's own father, one's own mother'. And the word *Sva* (one's own) does apply also to 'kindred'; as the lexicons say,[7] 'The word *Sva*

[1] But see p. 742 of the Mímánsá Darśana, where the text and the comments thereon are given in full, and which do not support this construction of the Mayúkha. See also Virámitrodaya l. 175, p. 1, which supports the view of the commentator on the Púrva Mimánsá.

[2] Of the four classes, the Bráhmaṇa alone can accept a *dána* or gift.

[3] Vír. l. 192, p. 2.

[4] About the acceptance of a son.

[5] That is, acceptance will be understood in its primary sense in the case of the Bráhmaṇas, and in its secondary one in that of the other classes.

[6] *Pratigraha*, or acceptance, is here declared proper even for a Śúdra, much more so will it be for other classes.

[7] The Amarakośa, p. 335 (ch. iii., sec iii., v. 210).

(own) when masculine, signifies kindred or one's self; when in the three genders, it means 'own'; when not in the feminine, it stands for wealth'. As regards the gift of a slave by birth mentioned in the sixth [book of the Púrva Mímánsá], it is questionable; since ownership in the mother being wanting from the absence of gift and acceptance in the primary sense, purchase, sale, and the like, it would be much more so in the case of a born slave begotten on her. So much for this digression.[1]

## *३३ *DÁYA (HERITAGE).

Un-reunited partible wealth is *dáya* (heritage).[2] The word *asansṛishṭa* (un-reunited) is used in order to exclude wealth put into a common stock for the sake of gain and the like; because the expression *dáyabhága* (partition of heritage) is not used to denote the division of wealth put together by merchants. In like manner there is also an exclusion of the re-united property technically so called and mentioned further on. Hence [it is said] in the Smṛiti Sangraha:— "Wealth which comes through the father, and that which comes through the mother, is described by the term *dáya* (heritage). The partition of it is now described."[3] Also in the Nighanṭu:— "The learned define *dáya* (heritage) to be the father's wealth which is to be divided."[4] The word *father* is used merely to denote relations in general [as a part for the whole]. This heritage is of two kinds, *Sapratibandha* (obstructed) and *apratibandha* (unobstructed). Where the life of the owner of the property or that of his sons, &c., is interposed, that wealth is called *sapratibandha* (obstructed heritage), for example, the wealth of uncles and the like; but where ownership accrues to sons, &c. from relationship to the owner, without the necessity of having recourse to other means of acquiring wealth, that is *apratibandha* (unobstructed heritage), for example, the father's wealth. This is the definition of heritage.[5]

[1] In his view with regard to the ownership over the wife and children, Nílakaṇṭha is supported by Váchaspati Miśra and Jímútaváhana and is opposed by the Mitákshará (ch. ii., l. 70, p. 2,) and the Víramitrodaya (l. 175, p. 1.) It must be noted, however that this difference is confined to the mode of reasoning to be adopted only; for the authors on both sides are agreed as to the conclusion that the power of the *pater familias* over his wife and children does not extend to giving them away or selling them. Nílkaṇṭha contends that the conclusion follows because the wife and children can never be the subjects of ownership; while the Mitákshara and the rest say that they can form subjects of ownership; but that they cannot be given away or sold, owing to specific prohibitions to that effect in the Śrutis and Smṛitis.

[2] Mit. l. 46, p. 1; Vír. l. 160, p. 1; and Jím. p. 9.

[3] Vír. l. 160, p. 1; Vya. M; Kam. [4] Vya. M.

[5] This division of heritage is not recognized by Jímútaváhana, according to whom the right to succession accrues only on the death of the previous owner.

## PARTITION OF HERITAGE.

Now its Partition. Nárada declares it [thus] :—"Where a division of the paternal wealth is instituted by sons, that title of judicature is called by the wise *dáyabhága* (partition of heritage)".[1] [The word] *putraih* (by sons), is indicative [also] of grandsons, &c.[2] The expression *pitryasya* (of paternal wealth) includes that of the grandfather, &c. [The reading adopted by] Madana has the very words *pitryadeh* (of a father, and the rest) instead of *pitryasya*. This is the definition of *dáyabhága* (partition of heritage.) Even when there is a total absence of common property, a partition is effected by the mere declaration, 'I am separate from thee'; for partition is but a particular condition of the mind; and this declaration is indicative of the same.[3]

### *Time of Partition.*

Manu [ch. ix., v. 104.] :—"The brothers having assembled after the death of the father and mother, may divide equally the paternal [and maternal] wealth, for while [the parents] live, they are not independent."[4] Even by inserting the word *cha* (and), the occurrence of the death [of both] is not required for the partition of either's wealth].[5] Hence in the Smṛiti Sangraha [quoted] in the Madana Ratna;—"Partition of the father's wealth may take place even whilst the mother lives, for without her husband the mother has no ownership independently. Likewise, partition of the mother's wealth may also take place whilst the father lives; for if there be issue, the lord

[1] Mit. chap. ii., l. 46, p. 1; Vír. l. 159, p. 2; Kam.

[2] Sons, grandsons, and great grandsons.

[3] See Jím. pp. 14 to 16, where he defines *Vibhága* (partition) to be एकदेशोपात्तस्य भूहिरण्यादावुत्पन्नस्य स्वत्वस्य विनिगमनाप्रमाणाभावेन वैशेषिकव्यवहारानर्हतया अव्यवस्थितस्य गुटिकापातादिना व्यञ्जनं विभागः which means, 'Partition is the marking by the dropping of a pebble, or the like [*i. e.*, by some definite act] the ownership which exists in some portion of land, gold, or the like; but which cannot be definitely assigned to a specific portion thereof, owing to the absence of anything indicative [of a regular distribution and allotment]. The definition given by Vijñánesvara, and followed by the author of the Víramitrodaya is, द्रव्यसमुदायविषयाणामनेकस्वाम्यानां तदेकदेशेषु व्यवस्थापनम्, which means the assignment of the different portions of a [common] property to the different ownerships which [before] extended to the whole [promiscuously]. Nílakaṇṭha leans to the definition given by Jímútaváhana.

[4] Vír. l. 170, p. 1, where the term *amíśáh* (not independent) is explained as indicating the absence of the power of independent disposition of ancestral property in the sons, and not as implying the absence of their ownership in the ancestral property at all.

[5] Jím. p. 97.

of the wife is not the lord of her wealth."[1] Brihaspati lays down an exception to this [period of partition] :—"On the demise of both parents, partition among brothers is declared, and even while they are both living, it is declared right if the mother be past child-bearing."[2] Nárada :—"Then after the death of the father, sons may divide the wealth equally, provided the mother's menstrual courses have ceased,[3] and the sisters have been married, or even when the father's sexual desire is extinguished,[4] or when his attachment to worldly objects ceases."[5] *Ramaṇah* [means] sensual passion. *Uparatasprihah* [means] he who has retired from the world. The clause *prattásubhaginishucha* (and when the sisters are married), like the eye of the crow,[6] is to be taken along with both the *rajonivṛitti* (extinction of the menstrual courses) and *ramaṇanivṛitti* (that of the sexual desire). Gautama :—"After the demise of the father, the sons may divide his wealth, or while the father is alive if the mother is past child-bearing, or if the father so desire."[7] By the [use of the word] *ichhati* (if the father desire), is meant that partition is declared [proper], even before the mother's courses have ceased, by the father's wish alone.

* In some cases, even without his [*i. e.*, the father's] wish, partition is spoken of by Brihaspati :—"The father and sons are equal sharers
* ३४ in houses and lands descended regularly [from ancestors] ; but sons are not worthy of a share in the father's wealth without the father's consent." From this it results that sons are worthy of a share in property acquired by the grandfather, &c. even though the father be unwilling.[8]

Manu [ch. ix., v. 209] and Vishṇu declare the partition of the

---

[1] See Vír. l. 170, p. 1 ; Vya. M. [2] Vír. l. 170, p. 2. [3] See Jím. p. 42.

[4] The reading adopted by Jímutaváhana, here, is *vinashte vápyaśaraṇe*, which means when he is degraded, or ceases to be a *grihastha* (a householder). He considers the reading adopted in the text as unfounded (see pp. 34 and 35). The Víramitrodaya and the Mitákshará are in favour of it.

[5] Mit. ch. ii., l. 48, pp. 1 and 2; Vír. l. 170, p. 1 ; Kam. and Vya.

[6] The crow is popularly believed to have one common pupil for both eyes, which he can take into the right eye when he has to look to the right, and into the left eye when he has to look to the left. The previous marriage of sisters is here likened to the crow's pupil, as being a common precedent condition to both the cases of partition during the lifetime of the parents, viz. the mother's being past child-bearing and the father's being superannuated.

[7] Mit. ch. ii., l. 48, p. 2; Vir. l. 170, p. 2 ; Kam.

[8] Mit. ch. ii., l. 51, p. 2. Jímútaváhana dissents from this and holds एवं च पितामहधनस्यापि पितुरिच्छयैव विभागः कार्यः किंतु मातर्निवृत्ते रजसीति विशेषः which means :—"Thus even in the wealth of the grandfather partition takes place only with the consent of the father, and that too, after the mother has ceased to menstruate." See p. 62, lines 6 and 7.

grandfather's [wealth] to be in some cases [dependent] on the father's wish alone:—"If a father recover property belonging to his father which could not be recovered by him [the grandfather], his sons cannot divide it with him except by his choice, since it is his self-acquisition."[1] Bṛihaspati:—"Over the grandfather's property which has been seized [by strangers] and is recovered by the father through his own ability, and over anything gained by him through science, valour, or the like, the father's ownership is ordained. He may give away or enjoy that wealth at his own choice."[2]

Nárada:—"A father who is afflicted with disease, or [influenced] by wrath, or whose mind is engrossed by sensuality, or who acts otherwise than the law [lays down], is not able to make partition [of the wealth.]"[3] Hárita:—"If the father be free from desire, old, has a perverted heart or intellect, or is afflicted with a chronic disease,[4] partition of the heritage may be made."[5] According to the Madana Ratna, *Akáme* (free from desire) means without desire of sharing in the wealth. *Viparítachetáh* (wrong in the heart or head) signifies following sinful practices. The sense is that [in such cases], partition takes place even if the father does not wish it.

Hárita says that the father being incapable, partition takes place by the advice [or consent] of the eldest son:—"If he [the father] be extremely decayed, or remotely absent, or afflicted with disease, the eldest son may think [of undertaking the management, &c., of] the wealth."[6] Śankha and Likhita:—"If the father be weak, the eldest [son] should conduct the family affairs; or, with his consent, the next brother if conversant with business."[7] *Anantarah* (the next), the one born after him. Partition at the wish of one capable of maintaining the family, &c. [is here intended]. If all be so qualified, there is no rule [as the above]. This is the final conclusion.

---

## *Mode of Partition.*

Yájñavalkya [ch. ii. v. 114]:—"If the father makes a partition, he may separate his sons [from himself] at his pleasure, giving the eldest

---

[1] Vír. l. 177, p. 2; Mit. ch. ii. l. 51, p. 2.

[2] Vír. l. 177, p. 2. This does not occur in the Mitákshará.

[3] Vír. l. 170, p. 2, and l. 172, p. 2; Mit. l. 48, p. 2; Vya. M. and Kam. The comment further on shows, that in such a case the partition does not rest on his consent or choice.

[4] Probably leprosy. [5] Mit. l. 48, p. 2; Vír. l. 170, p. 2. [6] Vír. l. 171, p. 2.

[7] Vír. l. 171, p. 2.

the best share, or all may be equal sharers."[1] The second half of the verse is only an amplification of the voluntary partition [described in the first half]; because the father's wish to make the partition, being exerciseable in the two modes mentioned [in the latter half], its independence is not contemplated. Also because such a construction will involve the difficulty of three predicates. Besides, [a third] difficulty would arise from irregularity thus, [if his wish were the rule, he might] give a *lakh* [of rupees] to one, a single *kauri* (shell) to a second and nothing at all to a third.

Unequal division.

Manu notes a distinction in the share of the eldest, [ch. ix., vv. 112, 116, 117]:—"The portion deducted for the eldest is a twentieth part [of the heritage], with the best of all the chattels; for the middle, one-half of that [or a fortieth]; for the youngest a half[2] of that [or an eightieth] [112]. [But] if there be no deduction, the shares are to be distributed in this manner [second half of v. 116]. The eldest should take a double share, and the next born a share and a half.[3] The younger son must have each a share. This is the rule of law [117]."[4]

Amongst twins, Manu declares the seniority of one who is born first:—"The right of even invoking [Indra, &c.] by the Vedic texts called [*Subrahmaṇyás*][5] is declared to depend on priority of birth; and in distinguishing[6] twins also, he is considered the eldest who is actually born first. Among twins, in him whose face the kinsmen and the parents see first, the priority of birth and [the capacity] to continue the line is established."[7] Although in medical works like the Pindasiddh,

[1] Vír. I. 170, p. 1, Kam. and Vya. M. The Víramitrodaya mentions and refutes the interpretation of this stanza by the Práchyas (*i. e.*, the eastern jurists), which gives the father power to partition his estate in any manner he pleases. Nílakantha here coincides with the Víramitrodaya. Jímutaváhana splits up this text into three sentences and says that the first mode of partition applies to self-acquired property and the following two to the grandfather's property (See Jím. p. 92).

[2] In the Manu, Smṛiti, and the Mitákshára the reading is *turíyam*, which means a fourth of the deduction for the eldest.

[3] Kullúka says—"If they clearly surpass the rest in virtue and learning.

[4] Mit. ch. ii., l. 49, p. 4; Vír. I. 173, p. 1. Vya. M. and Kam. Jimútaváhana would repeat the word '*adhikam*' (over and above) after '*anśam*' (the share), so as to mean that the eldest should have two shares, the second son one share and a half, and the rest a share and a quarter each. This interpretation is opposed to that of Kullúka and Vijñánésvara, and is unnecessarily strained.

[5] These Vedic texts which are used in the Agnishṭoma sacrifice are so called from their reciter being termed *Subrahmaṇya*.

[6] All the copies of Mayukha read *sañjñásu*, but referring this verse to the text of Manu I find the reading to be *garbheshu*, which seems a better reading and is followed by the commentator, Kullúka Bhaṭṭa, who explains it to mean "conceived at the same time." The same reading is adopted by Nirṇayasindhu in the first half of the 3rd *parichheda*, l. 10, p. 1.

[7] This text is referred to Devala in the Nirṇayasindhu, and is not found in Manu.

the seniority of the last born [of twins] is declared, that is set aside by the above texts in the matter now under discussion, because it [*i.e.* the medical theory] has no foundation in the Vedas, just as the rule 'purification ensues after a month'[1] [is set aside in some cases]. As for the passage in the Bhágavata, [see skandha iii., ch. xvii., v. 18, and comments thereon] [based on the text] "when there are two fœtuses, a contrary order occurs in the conception and delivery;" whereby the seniority of the last born is declared; that too is cancelled by the above texts [of Manu and Devala], because in the Puránas many practices opposed to the Smritis, are * to be found. According * ३५ to some, the question ought to be decided by the custom of the country. But what we stated before is the proper [interpretation].[2]

This partition by deduction is not proper in the Kali age. Because it is enumerated amongst the things prohibited in the Kali age.[3] And this has been laid down by us in the Samaya-Mayúkha. Nárada allows the father two shares:—"A father making a partition may reserve two shares for himself."[4] This text relates to one having an only son; for in the Madana Ratna is quoted the following text of Śankha and Likhita:—"If there be an only son, he (the father) may take two shares for himself."[5] The word *eka* (one) is used to denote excellence, as Amarakośa gives the synonyms of *eka* (one) to be *chief, other, only* [Amara ch. iii., sec. iii. 16, p. 290]. It means according to the Párijáta, that if the son be excellent [a father takes two shares].[6]

As regards the property acquired by the grandfather, however, Brihaspati declares the right to only an equal share, even by one

[1] This rule extends only to Vedic rites, because for other rites, purification takes place after ten days: in like manner, the above rule about eldership operates in the present case; while the medical theory may have its use for other purposes.

[2] The Nirnayasindhu accords with this view: see *Parichheda* 3 the first half, l. 10, p. 1.

[3] The MSS. A. and E. supply the text here alluded to, thus:—तथोद्धारविभागस्तु नैव-संप्रतिवर्तते which means, "similarly, partition by deduction is not now in vogue." This text is referred to in the Nirnayasindhu as found in Hemádri, (see *Parichheda* 3, first half, l. 62, p. 2), and in the Víramitrodaya, as found in the Adityapuráṇa (see l. 174, p. 1).

[4] The Mitákshara makes this applicable to self-acquired property: l. 51, p. 1; also Vir. l. 175, p. 1.

[5] The Mitákshará does not contain this text, and seems not to accept this law: see Vír. l. 175, p. 1. Jímutaváhana interprets the term *ekaputra* as a *Tatpurusha* (determinative) compound, so as to mean the son of one father, *i.e.*, a legitimate son by way of distinction from a *kshetraja* and a *dvyámushyáyana* (see p. 81). Nílakantha and the Víramitrodaya treat it as a Bahuvríhi compound. The latter appears to be a more simple and reasonable construction.

[6] Víramitrodaya (l. 174, p. 2), quotes the Vyavahára-Párijáta in support of this position, and allows the father to take two shares from his own acquisition, as the son being endowed with good qualities is able to earn wealth. It appears that the Vyavahára-párijáta referred to in the Víramitrodaya and the Párijáta referred to by Nílakantha here is the same work.

having an only son. "In wealth acquired by the grandfather [whether it be] moveable or immoveable, the equal participation of father and son is ordained."[1] Yájñavalkya (ch. ii., v. 121]:—"The ownership of both father and son is equal in land, a corody, or wealth acquired by the grandfather."[2] Kátyáyana:—"When the parents and the brothers take all the common wealth [and] in equal shares, then that partition is called a just division."[3] As for the text of Yájñavalkya [chap ii., v. 116], "A partition made by the father among sons separated with greater or less shares, if just, is pronounced valid,"[4] it means according to Madana, Vijñáneśvara and others that if the partition made by the father be just, it cannot be set aside.[5] As to what Nárada observes "Such as have been separated by the father with equal, greater or less [allotments of] wealth, to them that is a just [or lawful] distribution, for the father is lord of all,"[6] that text relates to the former ages.

In a case of equal partition between a father and his sons, a share to the wife is also spoken of by Yájñavalkya [ch. ii., v. 115] "If he make the allotments equal, his wives to whom no *stridhana* has been given by the husband or the father-in-law, must be made partakers of equal portions."[7] But if any has been given, one-half is to be given;[8] for [the text is], "Or, if any has been given, one-half should be assigned."[9] *Ardham* (One half), meaning so much as would make, with what has been given before as *Stridhana*, a share equal to a son's share. But if

[1] Vír. l. 176, p. 1; Vya. M. and Kam.

[2] Vír. l. 175, p. 2; Mitakshara, l. 51, p. 2. Jimútaváhana (p. 52) interprets the word द्व्य in the text to mean bipeds, from a reference to Nárada's text स्थावरं द्विपदं (see supra p. 34). This text has been differently interpreted by different writers on law. Dháreśvara says it serves the purpose of awarding to the son an equal share with the father only (see p. 53, Jím.). Vijñánésvara holds that inasmuch as the ownership of the son is created by birth alone, this text serves two purposes viz., of giving the son the power of vetoing an alienation by the father and of obtaining a partition against the will of the father in certain cases. The author of the Víramitrodaya thoroughly agrees with this view. Jímútavahana observes यत्र द्वयोर्भ्रात्रोर्जीवत्पितृकयोरप्राप्तविभागयोरेकः पुत्रमुत्पाद्य विनष्टोऽन्यो जीवति अनन्तरं पिता मृतस्तत्र पुत्र एव तद्धनं प्राप्नोत्यतिसंनिकर्षात् तदर्थं सदृशं स्वाम्यमितिवचनम्. (see Jím. p. 50), which means 'where of two brothers whose father is living, and who have not separated, one dies leaving a son behind him, while the other [brother] lives, and then the father dies; in such a case the son by his propinquity would be [but for this text] entitled to succeed to the wealth of the father. This [contingency is avoided] by the equal ownership propounded by the [present] text." Nílakantha follows the Mitáksharsá in this matter.

[3] Vír. l. 176, p. 2. [4] Mit. l. 48, p. 2; Vír. l. 172, p. 2.

[5] Jímutaváhana controverts this interpretation of Vijñánésvara and would give the text its plain meaning, *viz.*, that a partition made by the father, whether equitable or inequitable cannot be questioned by the sons. (See p. 89.)

[6] Kam. [7] Vír. l. 173, p. 1; Vya. M. and Kam.

[8] Here *half* stands as indicative of some portion.

[9] See the commentary of Vijñánésvara on stanza 148, ch. ii., of which this is a fragment, and where the term '*ardha*' is explained to mean a portion.

her wealth be [already] in excess of such a share, no share should be given her.

The same author [thus] speaks of the occasion when a son able to earn, and not wishing [more] is not willing to participate [ch. ii., v. 116] :—"The separation of one able [to earn wealth] and not desiring [a share] may be effected by giving him a trifle."[1] The giving some trifle is according to the Mitákshará with a view to exclude his sons from desiring to take a share of the heritage.[2]

Equal partition after the death of the father is spoken of in another Smriti[3] [Yájñavalkya ch. ii., v. 117]:—"After the death of the parent the sons should divide equally the wealth and debt.* Hárîta:—"When the father[4] is dead, the partition of heritage should be equal."[5]

* Yájñavalkya [ch. ii., v. 123]:—"When sons divide after the death of the father, the mother should also receive an equal share."[6] Vishṇu:—"The mothers become receivers of shares according to the shares of the sons."[7] In another Smriti [it is said] "At a partition by the sons, the wealthless mother should receive an equal share." The sense is that, if she be possessed of wealth, she should receive as much as would make her share equal to a son's share. If her wealth is larger than a share, she is to be shareless. Vyása speaks of a share to the stepmother and the grandmother:—"The sonless wives of the father are declared equal sharers; and so are all paternal grandmothers declared equal to the mother."[8] By the word *Sarváh* (all), even paternal step-grandmothers are included.

Yájñavalkya describes the mode of partition among the sons of several brothers [ch. ii., v. 120]:—"Among sons by different fathers, the allotment of shares is according to the fathers."[9] The meaning is that supposing one [father] to have one son, another two, a third three, the division takes place by the number of the fathers only, not by the number of the sharers.[10] Kátyáyana:—"If an undivided young brother dies, they should make his son a sharer of the inheritance if he has not obtained a livelihood[11] from his grandfather. He should obtain the share of [his] father from his paternal uncle, or his [*i. e.*

[1] Vír. l. 176, p. 2; Vya. M; and Kam. [2] Mit. ch. ii., l. 48, p. 2.

[3] This is an omission in the Mayúkha, as the verse is clearly from Yájñavalkya; See Vír. l. 174, p. 1.

[4] The brother would be included in this term. [5] Vír. l. 174, p. 1.

[6] Víramitrodaya l. 179, p. 1; Vya. M; and Kam.

[7] Vír. l. 180, p. 1, where it is explained that the mothers belonging to different classes receive the same shares as are allotted to sons of similar classes.

[8] Víramitrodaya l. 179, p. 1; Vya. M.; and Kam. [9] Vír. l. 177, p. 1, and Kam.

[10] In other words, '*per stirpes*' and not '*per capita*.'

[11] This from the context means a share, and the Víramitrodaya actually construes the word in this manner; See l. 177, p. 1.

uncles'] son. That very share would indeed be the legal share of all the brothers. Or, even his son would receive [a share]; beyond such a son, succession ceases."[1] The word *anuja*[2] (younger brother) is intended to denote even the elder brother. *Paratah* (beyond) [means] beyond the great-grandson. The sons &c. of the great-grandson do not obtain wealth of the great-great-grandfather, if the father, grandfather, and great-grandfather have predeceased such great-great-grandfather, who at his decease has left other sons or [other nearer] heirs alive.[3] The meaning is that in the absence of sons, grandsons and great-grandsons and the like [of the deceased], even he [the great-great-grandson] takes. And this does not refer to the undivided; but to the reunited; as there is a text of Devala which says "Among family members who having been divided, live together, the second partition of the heritage takes place [even] up to the fourth in descent. This is the rule."[4] If a debt, a document, a house or arable land be the property of the grandfather of one who for a long time has gone to a distant country, he is entitled to a share if he returns. If a man having left the common family, has gone to live in another country, there is no doubt [that] a share ought to be given to his descendants, if they return. [In the text of Devala] *avibhaktávibhaktánám* (among those who being undivided, were divided, and again became united) means the great-great-grandfather and his reunited sons &c.[5] This

[1] These texts of Kátyáyana are the basis of the interpretation of '*putra*' as meaning sons, grandsons, and great-grandsons only: See Vír. l. 177, p. 1; Vya. M. and Kam.

[2] In the above text of Kátyáyana.

[3] Thus:—

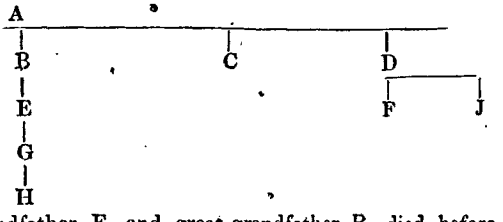


H's father G, grandfather E, and great-grandfather B, died before A, who dies afterwards, and at his death, leaves a great-great-grandson H, a son, C, and 2 grandsons F and J. According to this text C, and F and J will get the property.

[4] This is a forced construction of Devala's passage by Nílakantha. Instead of the *karmadháraya*, it should be read as *Dvandva*, signifying not "*who having been undivided have again become divided*," but "among family members, *undivided and divided*." Besides Nílakantha himself by his definition of *Dáya* or heritage proper (see above, p. 37) excludes the wealth of the reunited technically so called, or by partnership; whereas this rule primarily concerns *dáya* or heritage which descends in succession. W. and B., 2nd book p. 4.

[5] This explanation of the text of Devala, quoted above, ought properly to have come immediately after the text and not after the texts of Bṛihaspati, beginning with 'If a debt.'

refers to those living in the same country. As regards one living in a different country, even the fifth &c. takes the [heritage]. "Be he the third or the fifth, or even the seventh [in descent], he shall receive a share [of the heritage], on his birth and family name being proved [or acknowledged]."[1] This text of Brihaspati occurs in treating of residence in a different country.

In some cases, Bṛihaspati speaks of a division according to mothers. "If there be many sons sprung from one father alike in number and in class, but born of rival mothers, a legal division [of the wealth] may be made according to the mothers."[2] Vyása:—"If there be many sons of one man by different mothers, but equal in number and alike by class, a division according to mothers is approved."[3] Bṛihaspati gives an opposite example, [thus]:—"Among brothers who are equal in class, but vary in number [of sons produced on each wife], the shares of the heritage are declared according to a division by the males [not according to the mothers]."[4]

* ३७ Yájñavalkya* [ch. ii., v. 125] declares the mode of partition among sons by different classes [of mothers]:—"The sons of a Bráhmaṇa by a Bráhamaṇa, Kshatriya, Vaiśya, or Śúdra wife, get respectively four, three, two or one shares; those born to a Kshatriya, three shares, two or one respectively, that is according to the Kshatriya, Vaiśya or Śúdra wives he may take; and those born to a Vaiśya of a Vaiśya or Śúdra wife, two shares or one respectively."[5]

Bṛihaspati:—"Land obtained by acceptance of a gift, should on no account be given to the sons of a *kshatriya* or other [wife of an inferior class]; even though their father give it to them, the son of the Bráhmaṇi wife should resume it after the father is dead."[6] Devala:—"A son begotten on a Śúdri by the twice born is not worthy of a share of land; but one begotton on one of an equal class should take all the property [whether immoveable or moveable]: thus is the law settled."[7] *Bhumeh* (of land), acquired by purchase and the other modes also. But of moveable property, he does obtain a share.

However, the son by an unmarried Śúdra woman does not obtain a share even of moveable property.[8] Thus Manu to the same effect:—[ch. ix., v. 155]:—"The son of a Bráhmaṇa, a Kshatriya or a Vaiśya by a Śúdra woman is not a sharer of the heritage; whatever wealth his

---

[1] Vír. l. 178, p. 1. [2] Vír. l. 178, p. 1. [3] Id. [4] Kaṃ.
[5] Vír. l. 183, p. 1; Kam. and Vya. M.
[6] Mit. ch. ii., l. 53, p. 2; Vír. l. 184, p. 1; Kam. and Vya. M. [7] Ibid.
[8] The word is *dravya*, which primarily would signify money.

father gives him, shall alone become his property."[1] Bṛihaspati notes a distinction after the death of the father:—"An obedient and virtuous son born by a Śúdra woman to a man [who has no other son] should obtain maintenance; the rest, the Sapiṇḍas should divide equally among themselves." Gautama,—"Even the son borne by a Śúdra woman, to a childless man shall, if obedient, receive a provision for his maintenance." *Vritti-múlam* [means] a provision for his living.

The same:—"The *pratiloma* sons [shall have provision] similar to that of the son by a Śúdra woman." *Pratiloma* means sons begotten on women of classes superior to that of the begetter. Yájñavalkya [ch. ii., vv. 133, 134] states a distinction as regards a son begotten on an unmarried woman. "A son begotten on a *dásí* by a Śúdra becomes even partaker of a share by the [father's] choice. After the death of the father, the brothers should make him a half-sharer."[2] *Kámah*, [*i. e.*] the father's choice. The expression *Śúdrena* (by a Śúdra) [in the above text] shows that a son begotten by a twiceborn on a *dásí* (slave) does not take a share even by the father's wish. According to the Madana Ratna and other works, after the death of the father, he is not entitled even to half, nor in the absence of sons &c. to the whole [of the heritage].[3]

A distinction is made as regards a son born after partition. "A son born after partition takes only the father's [share]."[4] Bṛihaspati:—"All earned by a father, who has separated from his sons, belongs to the son born after partition. Those born before [the partition] are considered to have no ownership [over it]. As regards wealth, debt, giving, accepting, and purchasing, they are independent of each other, except in [respect to] mourning and offering libations of water."[5] If there be only debts, the previously separated son is not at all bound to pay debts without receiving a share of the heritage, as it is observed further on [Yájñavalkya ch. ii., v. 51] that 'a receiver of the heritage should be made to pay debts.' But if any one of them have reunited with the father, partition must be made with him, as is said by Manu [ch. ix., v. 216]:—"A son born after partition should take only the

---

[1] See on this subject Manu ch. ix., v. 145. Mitákshará l. 53, p. 2, makes the Śúdra's son receiver of a share, if he be unendowed by the father, amongst the Southern people. See Víramitrodaya l. 184, p. 2.

[2] Vír. l. 192, p. 2; Vya. M. and Kam.

[3] If he be *anukúla* or obedient, he gets maintenance alone: Mit. ch. ii., l. 56, p. 2; Vír. l. 192, p. 2, uses the word *Apratikúla* instead of *anukúla*, both of which mean the same thing.

[4] This is a text of Gautama, as stated in the Víramitrodaya l. 182, p. 2.

[5] Mit. l. 51, p. 2; Vír. l. 182, p. 2.

father's wealth, or if any sons be reunited with the father he should divide it with them."[1]

Yájñavalkya states a distinction in regard to partition after the father's death with respect to a son born afterwards by a mother, a step-mother, or a brother's wife, whose pregnancy at the time
* ३८ was not evident. [ch. ii., v. 122]*:—"When [after] the sons, &c., have been separated, a son is born of a wife of the same class, he becomes a partner of a share."[2] The partition is thus to be effected, by something being contributed by each of all the brothers &c. out of his own share, so as to make [the posthumous son's] share equal to their own. Vishnu:—"Those who have been separated from the father should give a share to the son born after partition;" and this has reference to shares neither increased nor diminished by profit or loss. But if they are so increased or diminished, the same [author] observes [Yájñavalkya ch. ii., v. 122]:—"Or his allotment should be made out of the visible estate, corrected [by necessary adjustment of] profit or loss."[3] *Dṛiśyát* [that is] out of the existing wealth.[4]

Vasishṭha states this distinction as to the time of partition among brothers:—"Now for the partition of heritage among brothers. The birth of sons from those pregnant wives [of parceners] who are childless should be awaited."[5] That is till then [the brothers] should wait [before they divide].

Bṛihaspati states a distinction as regards partition made after the father's death:—"Of the uninitiated younger brothers, the initiation and other ceremonies should be performed by the eldest brother, out of the common wealth of the father."[6] The form *yavíyasah* (younger) is [a license exercised by ancient Rishis] after the manner of the Vedás.[7]

The mention of brothers is indicative of the sisters [also]. Even so the same author,[8] "And those daughters whose [marriage and

---

[1] Mit. ch. ii., l. 57, p. 2; Vír. l. 132, p. 2; Kam; Vya. M.

[2] If he be born of a wife from a different class, he takes only from his father's share Vír. l. 132, p. 2.

[3] The loss should only be for necessary purposes, such as payment of debt, performance of ceremonies, &c.

[4] Both the Mitákshará (ch. ii., l. 52, p. 1) and the Víramitrodaya (l. 183, p. 1), state "from the property taken by the brothers."

[5] Mit. ch. ii., l. 52, p. 1; Vír. l. 182, p. 2; Vya. M. and Kam. [6] Kam.

[7] The following Panini's sutras are here referred to:—उगिदचामिति नुम् (ch., vii., quarter i., sutra 70) and सान्तमहतः संयोगस्येति दीर्घः (ch. vi., quarter iv., sutra 10) It should properly be *Yaviyánsah*.

[8] This is evidently a mistake. In the Víramitrodaya and Aparárka the following text is attributed to Vyâsa. In other works it is attributed to Nárada. At any rate it cannot be the text of the same author Bṛihaspati; otherwise the author's explanation of *brothers* as including sisters would be out of place.

ceremonies have not been performed, must have those ceremonies performed by their elder brothers according to law, from out of the same paternal [common] wealth."[1] Yájñavalkya states a distinction as regards daughters' initiation [ch. ii. v. 124]:—"Uninitiated sisters should have their ceremonies performed by those brothers who have been already initiated, giving them a quarter of one's own share."[2] The sense is [that] a fourth part of such a share as would be allotted to a son of the class to which the sister [belongs] being given to each sister, they are to be initiated.

Twelve kinds of sons.

For the sake of usefulness in regulating the taking of the heritage, Yájñavalkya gives this [detailed] description of sons, primary and secondary [ch. ii. vv. 128—132]. "1st. The *aurasa*[3] son who is procreated on the lawfully wedded wife; 2nd. Equal to him, is the son of an appointed daughter or the appointed daughter herself; 3rd. *Kshetraja* (the son of the wife) is one begotten on a wife by a *sagotra* (kinsman of her husband), or by another; 4th. One secretly produced in the house is declared a son of hidden origin; 5th. A damsel's child is one born of an unmarried daughter: he is considered a son of his maternal grandsire; 6th. A child begotten on a woman whose [first] marriage has or has not been consummated, is called the son of a *Punarbhú*, (a twice-married woman); 7th. He, whom his father or mother may give [for adoption] is *dattaka* or a son given; 8th. A son bought is one sold by them [his parents]; 9th. A *kritrima* or self-made son is one adopted by the man himself; 10th. One who gives himself is a *Swayandatta* or self-given son; 11th. A son produced in the womb [before marriage] is a *Sahoḍhaja* [son of a woman who was pregnant at marriage]; 12th. He who having been forsaken by his parents, is taken for adoption, is *apaviddha* or a deserted son."[4]

The *aurasa*, or the legitimate son born of a lawfully married wife of equal class, is the principal son.

*The son of an appointed daughter* is of two kinds, of which the first is thus explained by Vasishtha:—"This maiden daughter who has no brother, I will give to thee in marriage decked with ornaments; the son who may be born of her shall be my son."[5] The same author speaks of the other kind [of Putrikáputra thus]:—"The appointed daughter is herself the third kind of son."[6] In this case the father's obsequies and the like are to be performed by the appointed daughter herself.

[1] Vír. l. 179, p. 2; Vya. M. and Kam.
[2] Vír. l. 179, p. 2; Vya. M. and Kam.
[3] Literally, *born from the breast.*
[4] Vír, l. 184, p. 2; Vya. M. and Kam.
[5] Mit. ch. ii., l. 55, p. 1; Vír. l. 185, p. 1; and Kam.
[6] Mit. ch. ii., l. 55, p. 1.; Vîr. l. 185, p. 2, speaks of the appointed daughter herself as the second son, and this seems to be the better reading.

*The son of the wife* is one begotten on the wife of a brother, or other [relation dying] without male issue, by direction of the preceptor, by the younger brother or other relation of the same *gotra* or lineage. The *Paunnarbhava,* or the son of a twice-married woman, is one begotten by the second husband on a woman whose [first] marriage had not been consummated by the first husband.

All the secondary sons mentioned here, except *dattaka* or the adopted son, are forbidden [recognition] in the Kali age; because we read in the prohibitions [in the *Kali* age], "There is no acceptance as sons, of others than the *dattaka* (adopted) and an *auras*, or legitimate sons."[1]

## *DATTAKA* (THE ADOPTED SON).

The Adoption of son.

Now: The ceremony of Adoption. Manu [ch. ix., v. 168]:—"He whom his father or mother [*with her husband's assent*] gives to another as his son, the donee being in distress [*in consequence of being sonless*], provided the boy be of the same class, affectionately disposed, is considered as a son given; the gift being confirmed by pouring water."[2] [The italicized portion is based on Kullúkabhaṭṭa's comments on Manu.] From the word *wá,* (or), it means that if the mother be absent, the father alone may give him away, and if the father be dead, the mother may do the same, but if both be alive, then even both: so [says] Madana.

By the use of the word *ápat,* (distress,) [it is to be understood], the giving is not to be made except in distress. But this prohibition, says Vijñáneśvara, is as regards the giver only [not the receiver] as it affects visible interests [and] not the religious ceremony [of adoption].[3] But it is not so; for since the object of this prohibition is not for visible [or worldly] interests, its religious [or sacrificial] nature becomes known, or taking it for granted that it was for visible objects, there is essentially an invisible object also in the rule; [so that by] the non-observance of this [rule], the accomplishment of the invisible virtue [or good] proposed to be achieved will not be effected. But some say, To the word 'distress' the sense of a prohibition does not apply; lest there should arise the difficulty of *Parisaṅkhyá*[4] in the case of non-distress; because the word *Ápat,* or distress, is merely known

[1] Nirṇayasindhu, parichheda iii, first half, l. 63, p. 1; the Dattaka Mímánsá speaks of a third son—the Kṛitrima, as allowed in this age; and he is now allowed to be so by the Mithila School: See viii. Sutherland's W. R. p. 155, Shiba Kuveri vs. Jogun Singh; Norton's L. C. Hindu Law, p. 70.

[2] Mit. ch. ii., l. 55, p. 1.; Vír. l. 188, p. 2; and Kam. [3] Mit. ch. ii., l. 55, p. 1.

[4] That is, you have to reject the affirmative sense, to decline receiving that which necessarily arises from the context, and to assume some other meaning. See Mitákshará, ch. i., l. 11, p. 2.

as the motive [for giving]. But although distress be the motive, still there is no sin, if when the distress exists, the gift of the son is not made; because in the above text, [the giving, &c.] and [the distress] are like the definition and the defined; because there is no *vidhi* (rule) laid down commanding giving [of a son] when the motive of distress exists.

Although he [Vijñáneśvara] in the chapter on Marriage says that "in transgressing the prohibition against [espousing] sickly and the like brides, there is only a transgressing of a visible rule [framed with a popular object], the state of a lawful wife is superinduced notwithstanding [the existence of those defects];" that also is by the above argument over-ruled.

Now *Sadṛiśam* means alike by family and qualities, not by class. Therefore according to Medhátithi, a Kshatriya, &c. may be the *dattaka* or given son of a Bráhmaṇa, &c. But Kullúkabhaṭṭa says, 'alike by class'[1] [Manu ch. ix., vv. 168 and 169]. And this is correct because Yájñavalkya [ch. ii., v. 128] after enumerating the twelve sorts of sons in this manner observes:—"The legitimate son is one procreated on the lawfully wedded wife," &c., and thus concludes [ch. ii., v. 133]: "This law is propounded by me in regard to sons equal by class," and this will be made clear by me, by two texts of Śaunaka to be cited hereafter. Vijñáneśvara also says the same thing.[2] He also says: "From the text—'By the mere birth of the eldest son, man becomes the father of male issue,'[3] the performance of the filial office primarily devolves on the eldest son, therefore he should not be given. But this prohibition [is as] regards the giver only; not the taker."[4]

This prohibition might indeed apply to the giver alone, provided this text [of Manu] contained a prohibition of the gift of an eldest son; but it does not; for there is a want of affirmative [command]; and because the expression, 'Man becomes the father of male issue,' being merely a declaration of parentage, [by the mere birth of a son] there is only a discharge of the [ancestral] debt. According to this interpretation the latter half [Manu ch. ix., v. 106],—"And [the father] being free from obligation to his ancestors,[5] he [the eldest son] is worthy of the whole," exactly accords [with the first]. *Sarvam* [means] wealth. A male only can become adopted, not a female; because from the pronoun *Sah* [he] occurring in the text, 'He is to be known as a son given,'[6] which [sentence] is expressive of a connexion between an object and its attribute, it is understood to imply

[1] The inferior of the superior class, see Víramitrodaya, l. 188, p. 2.
[2] Mit. ch. ii,, l. 55, p. 1.
[3] This is a text from Manu. ch. ix., v. 106.
[4] Mit. ch. ii., l. 55, p. 1.
[5] जायमानो वै ब्राह्मणस्त्रिभिर्ऋणवा जायते.
[6] This is a fragment from a verse in Manu (ch. ix., v. 168).

a male person equal in class who is the subject of a gift made by the father and mother, accompanied with affection [and pouring of] water, and of which distress is the motive; as from the pronoun 'him' in the holy text, "Let a Bráhmaṇa of eight years be initiated, and let *him* be instructed,"[1] there* arises the knowledge of a male of eight
* 80 years, of the Bráhmaṇa class, initiated at the thread ceremony and the like. From the above, results the refutation of what some persons have held, *viz.*, that since in the act of gift, signified by the term *dattrima* [or given], there is nothing distinctive [of either male or female], and as by the aphorism '*Ktrer mam nityam*'[2] [i.e. formations ending in the affix *ktri*, always have *map* added] [whether the word be masculine or feminine], the daughter given to the husband or another is signified [by the term *dattrima*].

Śaunaka thus declares the mode of adopting a son:—"I, Śaunaka, will now declare the best adoption. One having no male issue or one whose male issue has died, having duly fasted for a son, having given a pair of clothes, a pair of ear-rings, a turban, a ring to an *Ácharya* (priest) religiously disposed, a follower of Vishnu[3] and thoroughly read in the Vedas, having brought a *barhish* (a layer of the *Kuśa*[4] grass), and an *idhmá* [a bundle of small sticks] of the *palášа*[5] tree, having invited kinsmen, and relations, having feasted the kinsmen, and especially the Bráhmaṇas, having performed the rites, commencing with that of *anvádhána* [or] of placing the *Samidh* (stick) over the consecrated fire, and [ending with] that of *utpavana* or purifying of the clarified butter; and having advanced before the giver, should [thus] beg, 'Give a son.' The giver being capable of the gift [should give] to him with the recitation of the five prayers, the initial words of the first of which are '*Ye Yajñena.*' [The acceptor] having taken him by both hands with recitation of the prayer commencing with '*Devasyatvá,*' having inaudibly repeated the mystical invocation, beginning with '*Angád-angat*' and smelt the forehead of the child; having with clothes and the like adorned the boy bearing the reflection of a son, [and] accompanied with dancing, songs, music, and benedictory words, having brought him into the middle of the house; having according to ordinance offered to the sacred fire an offering of boiled rice [to each incantation] with recitation of the mystical invocation, '*Yastváhṛidá,*' of the single prayer from the *Rigvedá*, commencing with '*Tubhyamagne,*' and the five prayers, the initial words of the first of

[1] See the Áśvaláyana Sútra (Adhyáya i., Kandiká xix. and Sútra i.)

[2] Páṇini ch. iv., quarter iv., Śútra 20.

[3] It is not meant that he should belong to the Vaishṇava sect, but that he should be a worshipper of that Deity.

[4] Poa cynosuroides.

[5] Butea Frondosa.

which are, *'Somodadat';* and having performed a sacrifice with the holy texts, beginning with *Svishṭakrit,* should close the remaining ceremony of the sacrifice. Amongst Bráhmaṇas, the adoption of a son should be made from amongst the *sapindas,*[1] or in their absence, an *asapiṇḍa* [one not a *sapinda*] may be adopted, otherwise one should not be adopted; amongst Kshatriyas, one from their own class, or one whose *gotra* is the same as that of the [adopter's] preceptor may be adopted; amongst Vaiśyás, from amongst those of the Vaiśya class; amongst Śúdras, from amongst the Śúdra class; amongst all classes, from amongst their respective classes only, not from others. But a daughter's son and a sister's son are affiliated even by Śúdras. By no man having an only son is the gift of a son to be ever made. By a man having several sons, such a gift is to be made by all means. An excellent Bráhmaṇa should bestow a gratuity on the officiating priest according to his ability. A king [should grant] even one half of his dominion. A Vaiśya three hundred pieces of money;[2] a Śúdra even the whole of his property; if indigent, to the extent of his means."[3] *Chháyávaham,* (Bearing the reflection of a son); [that is he should be] same or equal.

*Daughter's son and sister's son, &c.* Just as in the passage, '[he] gives the stick to *Maitrá-varuṇa,*' although owing to the past and future use [in the sacrifice] of the stick it is possible to consider the stick as *bhávya* (principal object), yet Maitrá-varuṇa, who is of future use [in the sacrifice] is considered the principal object [in the sentence], as being in the dative case, and as being the invoker of the deities in accordance with the precept '[Maitrá-varuṇa] with the stick in hand should pronounce the invocation'; so similarly in the present passage, the Śúdra, inasmuch as it is he who satisfies the debt [of the manes] must be considered the *bhávya* [principal object], as being the subject about which [the adoption of a] daughter's or sister's son is predicated, the genitive termination [after the word Śúdra] being interpreted in the sense of the dative. Therefore it is proper that they [daughter's and sister's sons], being the *Vidheya* (predicates) should be the objects of limitation, [so as to mean that the] daughter's and sister's sons alone are for a Śúdra. As the [term] Śúdra, not being the predicate, cannot be the object

---

[1] The *Sapiṇḍas* are kinsmen connected by the offering of the funeral cake to the manes of father, grandfather and the great-grandfather, &c., including the direct descendants of four persons.

[2] See Sanskára-Kaustubha where the reading is रत्नशतद्वयम् (two hundred gems) which is more intelligible than the one in the text, which is वित्तशतत्रयम्.

[3] See the Dattaka Mímánsa pp. 25 and 26; and the Dattaka Chandriká pp. 51 and 52; and the Sanskára Kaustubha, l. 47, p. 1.

of limitation, if the passage [in question] be interpreted as meaning that [daughter's and sister's sons] are for a Śúdra alone, then that interpretation is open to the objection of *Parisankhya*[1] [a negative inference which is considered objectionable] in respect of adopters in the Bráhmaṇa and other [classes, who will be excluded]. Therefore the daughter's and sister's sons alone are the principal [adoptees] for a Śúdra. Failing them, another of the same class [may be adopted]; for, "Śúdras from amongst the Śúdra class": so he [Śaunaka] has said. This word *játi* (class) is not to be narrowed down to the daughter's son and sister's son; because the being a daughter's son or a sister's son is not co-extensive with being of the same class,[2] and because there would also arise the difficulty of having in one and the same Smṛiti, a general proposition which would then become useless.[3]

* २१ This is fully explained by my venerable father in his Dvaita-Nirṇaya.[4] And the same is the usage amongst the learned,* and

[1] See supra p. 50 note 4.

[2] Because this text being applicable to all ages, and marriages of different classes being allowable, one might be a daughter's or a sister's son and yet be of a different class; and *vice versá*.

[3] Because the general proposition, "for Śúdras, among the *Śúdra* class," occurs first; and in this (Śúdras) class, a marriage with any of the higher classes being illegal, a Śúdra must necessarily have a Śúdra wife, and the daughter's son and the sister's son must be Śúdras likewise. Therefore if the text "the daughter's and sister's sons are even for Śúdras," &c. were to be construed in the narrower sense as a rule limiting the acceptance of these two alone for Śúdras, the inclusion of the above general proposition would be altogether useless.

[4] Śankarabhaṭṭa [the father of Nílakaṇṭha] the son of Nárávaṇabhaṭṭa, in his work styled the Dharmadvaitanirṇaya, in the chapter styled 'The solution of doubts in regard to adoption,' says:—

"In the Prayogapárijáta on the subject of adoption, the law of taking a son [in adoption] as laid down by Śaunaka is written. There the text "the daughter's or the sister's son is given to a Śúdra" [occurs]. Some [have interpreted it by] the rule of limitation [to mean] that these two [*viz.*, the daughter's and the sister's son] are [adoptees] for a Śúdra alone [and] not for any other [such as a] Bráhmaṇa or the like. [But] that is not [so]. In the text 'a cow should be given to a Bráhmaṇa, it is [indeed] proper to make the [word] Bráhmaṇa the object of limitation, as being of no past or future use [in the act], and [being thus] a predicate [denoting] attributes. [But] such [limitation] is not proper [in the case] of Śúdra [in the] present [instance]; because of his future use, and [because of] his not being a predicate [denoting] attributes; and because of the impossibility of the rule of limitation [applying to any term] other than a predicate. [If it be asked] how the Śúdra is of future use, the answer is:—In the [Vedic] text 'There is no [translation] to the higher world [after death] in the case of a sonless man; [for] by his birth a Bráhmaṇa becomes a debtor in three [ways, viz.], to the Gods in sacrifices; to the manes in issue, [and] to the Ṛishis in learning,' the [term] Bráhmaṇa is used as illustrative [of all the classes], as has been stated in the *adhikaraṇa* (aphorism) '*Bráhmaṇasya Soma vidyá prajam ṛiṇavákyena samyogát*' [See Mimánsá Darśana, p. 651, ch. ii., quarter 2*nd Śútra* 31:] which means 'To the Bráhmaṇa' *Soma* (or sacrifice) *Vidyá* (knowledge of the Vedas) and *prajá* issue [in the shape of sons] are [necessary], because of the applicability to

thus the right of a Śúdra to adopt, being established like the established

him of the text of [the three debts]. Thus a Śúdra [too] has to discharge his debt to the manes; and is [therefore] *Bhávya* (the principal object or subject in the sentence), the genitive [termination after the word Śúdra] being construed in the sense of the dative. Just as in the [text] 'he gives the stick to Maitrá-varuṇa,' Maitrá-varuṇa as the holder of the stick, being in the dative case is the *Bhávya* (subject) as being of future use, because the [office of] reciting invocations with the stick in his hand is assigned to him in accordance with [the text] '[Maitrávaruṇa] holding the stick in his hand recites the invocation' [and just as] the [possible construction of the] stick as *Bhávya* (subject) owing to its [past] use in capacitating the sacrificer [for his office], is rejected, and, the [whole] text is interpreted to mean 'Maitrávaruṇa should be given the stick,' so as to make the stick a [part of the] predicate: so, in the present instance, although it is possible [to consider] the son [to be adopted] as the *Bhávya* (subject) owing to his future use in accordance with [the text] '[he] conquers the [future] worlds through a son' and '[he] enjoys eternity by a grandson,' [yet] it is proper to make the sentence mean 'a Śúdra should be given the daughter's or the sister's son, [as the adopted son],' so as to make the daughter's or the sister's son a [part of the] predicate, and [consequently] the proper objects of limitation. The Śúdra being the subject [in the sentence], the limitation [of that term] would involve [the logical fallacy of] *Parisankhyá* (a negative inference), [such] as is observed when the taking of the horse's cord by [the recitation of the text] *imámagribhṇan rasánámṛitasya*, &c. [they] took this cord of truth, &c. is enjoined. That [*parisankhyá*] involves three objections. Besides [the interpretation of] one and the same text by *niyama* (rule of limitation) and *parisankhyá* (a negative inference) is not possible. Thus it is established that the daughter's or the sister's son can be adopted even by a Bráhmaṇa or the like [*i. e.* a Kshatriya or a Vaiśya]; and that a Śúdra should adopt the daughter's or the sister's son alone wherever possible. [It may be objected that] if [the terms] 'a daughter's or a sister's son' are to be limited, there will be no [adoptee] for a Śúdra other than those [daughter's or sister's sons] as [the words] 'where possible' are [introduced] without authority. This [is answered by] some [as follows]:- the begetting of issue is peremptorily enjoined by the text '*Bráhmaṇasya soma*, &c.' [see above in this very note], the [final] purpose of which is that implied in the word '*puttra*' (son), *viz.*, the satisfaction of the debt of the manes. That purpose being served by the adoption of a son as well, this [commandment for adoption] is as peremptory [in the case of the sonless] as [that for] begetting issue. [That being so] the *yathásaktinyáya*, (the rule which enjoins the observance of a precept as far as possible) applies, and the non-restriction of the daughter's or sister's son is proper. But this [answer] will not do. For the [said] *yathásaktinyáya* properly applies only with regard to the details of an enjoined ritual. Consequently by [the operation of] that rule, the *homa* (sacrifice) or the like, which is a part of the ritual enjoined for adoption, may be disregarded, but not so the [relationship] of a daughter's or a sister's son, that not being a part of the ritual. [Similarly] the restriction of the same class enjoined by Manu in the text: 'I have thus laid down the law in regard to sons of the same class' cannot be disregarded. Therefore [the introduction of the words] 'wherever possible' [into the interpretation] is improper." The [correct] answer to this is: Because the community of the class in the adoptee is enjoined by Saunaka in the [text] 'to Vaiśyas from the Vaiśya class [and] to Śúdras from the Śúdra class,' and by Manu in [the text] 'I have laid down this law in respect of sons from the same class,' and because the restriction [of the word Śúdra to a daughter's or sister's son] is not possible, inasmuch as the Śúdra and a daughter's or a sister's son are not co-extensive terms, nor in [the relation of] genus and species [to each other], the text [relating to] the Śúdra should be interpreted as enjoining the adoption of sons other than those of a daughter and sister, so as to make no text nugatory. Where it is

right of the carpenter—Nisháda,[1] [to perform a sacrifice], the assertion in the Śuddhi Viveka that a Śúdra is not entitled to make the acceptance of a son, which has to be accomplished through Vedic *Mantras* (sacred texts), and by a *Homa* (sacrifice to the fire) is also refuted. The *homa* (sacrifice) with a recitation of the *Mantras* is to be performed by him through a Bráhmaṇa, because of the text of Párášara, *viz.*, "He, for whom a fast, a vow, a sacrifice, ablution at a holy place, silent meditation and the like, are made by Bráhmaṇas,* obtains
* ३२ their benefit." The same is the opinion of Smárta and
10 Harinátha. As for the assertion of Párášára himself that that Bráhmaṇa who, for a money gift, may perform a sacrifice on behalf of a

possible, the daughter's or the sister's son should alone [be adopted] because the former is allied [to the adopter] by [drawing in his veins] the [adopter's] own blood, and the latter by [drawing in his veins] the blood of the [adopter's] father. When they are not available, a Śúdra other [than those] does become the son, [*i. e.* is eligible for adoption]. In this way, the popular usage is not inconsistent [with texts] and everything is faultless.

This (view) has been also noticed with approval by Krishṇa Bhatta in his commentary on the Nirṇayasindhu in Part iii., under the heading of adoption. The passage runs
20 thus:—"The Bhaṭṭa [the author of the Dvaitanirṇaya had this family appellation by way of eminence] on the other hand says:—"There can be no limitation [in the interpretation of the Śaunaka's text] so as to mean that the daughter's son and the sister's son are two [adoptees] for a Śúdra alone and for no other. Just as in [the sentence] 'the stick should be given to Maitrávaruṇa' the Maitrávaruṇa as the holder of a stick is the principal [object], because of his future use [in the sacrifice] as the invoker of the deities, in accordance with [the] text 'holding the stick, [he] shall recite the invocations,' which assigns the work of invoking to Maitrávaruṇa holding the stick in hand, so as to make the whole sentence predicate of Maitrávaruṇa a gift [to him] by the sacrificer of his stick; so here [the present passage should be construed to] predicate of
30 a Śúdra the adoption of a daughter's or a sister's son, because of his [the Śúdra's] use as the satisfier of the debt [of the manes], the genitive [in the text] being taken in the sense of the dative. It is thus proper to make the daughter's or the sister's son the subjects of limitation as being the predicate [in the text in dispute]. The term Śúdra being the subject, its limitation will be open to the [logical fallacy of] *parisankhya* ('a negative inference') as when the taking of a horse's string is enjoined by the [recitation of the formula commencing with] *imámagribhṇan raśanámṛitasya* (this string of truth is taken up) [by them] [which does not specify the string to be of any particular animal]. This [mode of construction, *viz.*, *parisankyá* is open to] three objections. Therefore [it follows] that the daughter's or the sister's son alone are the principal
40 adoptees] for a Śúdra; failing them any other of the same class; because of the same author's text] 'to Śúdras from the Śúdra class.' It cannot be said that [in the last mentioned text], the generic term [Śúdra] should be limited to the daughter's or sister's son. For if that were so, [this] general statement in the same Smriti would become nugatory. Accordingly even the Bráhmaṇas and the like [*i. e.* the Kshatriyas and the Vaiśyas] may receive [in adoption] the daughter's or the sister's son, there being no prohibition [to that effect]." For an exposition of the Mímánsá canons of interpretation called *Niyama* and *Parisankhya*, see the disquisition of Vijñáneśvara on l. 11, p. 1 of the Mit. ch. i.

[1] A Nisháda is one begotten by a Bráhmaṇa on a Śúdra woman. This rule is based
50 on a Section of the Mímánsá of Jaimini Adhyáya vi., quarter i., Sútra 51.

Śúdra, shall become a Śúdra, and the Śúdra shall become a Bráhmaṇa;" it is, according to Mádhava, to be taken as meaning that the benefit of the act accrues to the Śúdra, while the sin attaches to the Bráhmaṇa.

Even a woman has, like the Śúdra, authority to adopt, because of the text "women and Śúdras are governed by the same rules."

Vasishṭha:—"Man produced from virile seed and uterine blood, proceeds from his father and his mother as an effect [from its cause]. Therefore his father and mother have power to give, to sell, or to abandon their son. But no one should give or receive an only son, for he saves the man [from *put* or hell]. A woman should neither give nor receive a son except with her husband's permission. He who is about to adopt a son, having invited kinsmen and announced his intention to the king,[1] and having performed a sacrifice in the middle of his house with the '*vyáhṛiti*' prayers, should take an unremote kinsman of the same class. In case of a doubt, he whose kinsmen are distant[2] should be kept apart like a Śúdra. For, it is well known that by means of one [the adopted], he [the adopter] is able to save many. If, after adopting, a legitimate son should be born, the adopted son should be a sharer of a fourth."[3]

The husband's permission is intended only for a woman whose husband is alive, for evident worldly reasons. But a widow may adopt even without it by the assent of her father, or (in his absence) by that of her *jñáti* (clansmen). Hence, says Yájñavalkya [ch. i., v. 85]: "The father should protect the maiden daughter, the husband, when [she is] married, the sons in (her) old age; in their absence their clansmen. A woman has no independence at any time." Thus her dependence on the husband in a particular state alone is indicated. In his absence, or owing to his infirmity on account of old age or otherwise, her dependence rests even on her sons, &c. Kátyáyana also [who says]: "Whatever spiritual acts (or acts relating to the future state) a woman performs without the permission of the father, the husband, or the son, to obtain a benefit after death, it shall become fruitless," declares the permission of the husband, &c., applicable to particular states. *Aurdhvadehikam* [means] relating to the next world. Therefore that permission of the husband indicated for a particular state [by Yájñavalkya] is also laid down here [by Kátyáyana following Yájñavalkya], and is not a new rule, laid down (without prior authority).

[1] Krishṇabhaṭṭa, the commentator on the Nirṇayasindhu, says that the word *Rájá* is *Grámapála* or Lord of the village,

[2] Víramitrodaya, l. 189, p. 1, makes 'distant' to mean one whose country and language disagree; and Kalpataru speaks of one whose uncle, &c. is not near; Dattaka Mímánsá, p. 27, seems to agree with the Víramitrodaya.

[3] Mit. ch. ii., l. 55, p. 1.; Vir. l. 189, p. 1; Vya. M. and Kam.

Hence [it follows that] a widow has authority [to adopt] even without the permission of the husband.[1]

*Adúrebándhavah* (means) a *sapiṇḍa* as near as possible. And even among the near *sapiṇḍas*, the brother's son is the chief; because of the text of Manu [ch. ix., v. 182], quoted in the Mitákshará[2]:—"Of brothers of the whole blood, if one becomes the father of a male issue, then by that male issue, all of them become fathers of a male issue. Thus declares Manu." And this is the proper motive of this precept, since any other is improbable. *Dúrebándhavam* [means] one of an unequal class.

According to my venerable father, even one married and the father of a male issue is fit for adoption. And this is proper, since there is nothing opposed to it. But it is said in Káliká Puráṇa, "Oh lord of the earth, a son whose ceremonies up to tonsure have been performed with the *Gotra* or family name of his father, does not attain the sonship of another man. The ceremony of tonsure and of investiture being indeed performed [by the adopter] under his own family name, sons given and the rest whose ceremonies are thus performed, are to be considered as sons, else they are termed *dása* (slaves). Oh king, sons given after their fifth year and the rest are not sons. Having taken a boy of five years the adopter should first perform the sacrifice for male issue."[3] This relates to those belonging to different *gotras* or families. *Áchúḍántam* [means] up to the ceremony of tonsure inclusive. The particle *ang* is inceptive, used for the sake of including all such cases; for if it be meant as a limit conclusive, it will be liable to the objection of being in opposition to the ceremonies of tonsure and investiture [specified in the text]. But much reliance is not to be placed on this passage; for it is not to be found in two or three copies of Káliká Puráṇa.[4]

* This *dattaka* or given son is of two sorts: (1) *kevala* (simple), * ४२ and (2) *dvyámushyáyaṇa* (son of two fathers). The first is one given without any condition, the second is one given under the condition, that this son belongs to us both. Of these, the first should perform *Śráddha* and other obsequial rites of the adopter only. The same may be thus demonstrated [in detail]. By the acceptance of a son there is anxiety [of compassing some future end]; and in the rite [above mentioned as prescribed by Śaunaka thus], "the acceptor of a

[1] Víramitrodaya l. 188, p. 2, following the same doctrine, says that what has not been prohibited may be taken as permitted by him.

[2] Mit. ch. ii., l. 56, p. 1; Vír. l. 188, p. 2; Vya. M. and Kam.

[3] Kam.

[4] The Samskára Kaustubha similarly does not recognize as genuine the above texts; see l. 45, p. 2.

son" [inviting kinsmen, &c.] the son being in the second case, the making a son is spoken of. But it is impossible for the adopter to make a son in the manner in which a son would be naturally born.[1]

Therefore by the term *Putra* or the 'son', the whole of the duties of a son being had in view, the accomplishment of the invisible virtue whereby those duties will be discharged is to be accepted. Therefore in this manner [alone] sonship in the acceptor's family is capable of being produced. Hence will proceed acts which are dependent on the relationship of son and father, &c. Therefore, says Manu [ch. ix., v. 242]:—"A given son shall never claim the family and estate of his natural father; the *Piṇḍa* (the obsequial oblation) which follows the family and heritage, and the Śráddha and other funeral ceremonies of the giver cease."[2] *Gotrarikthánugah* [means] what goes along with the family and the inheritance; the two expressions being generally co-extensive. *Dattrima* [means] the given son; because as [will be noted] further on in the case of a *dvyámushyáyaṇa*, the [original] family, &c. do follow the [adoption]. *Piṇḍa*, or the obsequial oblation, according to Medhátithi, Kullúka Bhaṭṭa [Manu ch. ix., v. 142] and others, means the first funeral ceremony, the *Śráddha*, &c. According to others, *Piṇḍa* means the *sapiṇḍa* relationship, and *swadhá* [signifies] Śráddha and other funeral ceremonies. Properly speaking, as by the passage, "He who has begotten a son and whose hair are black, should establish the sacred fires," the condition of his age [or manhood] is exemplified; or as by the passage "the *adhvaryu* (officiating priest) measures the ground half outside and half inside the *vedi*, [for the sacrificial post]," the particular position of the post is exemplified; even so by the terms, *Gotra* (family), *piṇḍa* (funeral oblation), *riktha* (heritage), and *svadhá* (*Śráddha*, &c.) are to be understood, all the acts connected with the *Piṇḍa* or the funeral oblation due to the natural father, their extinction is pronounced. From this also follows [as a matter of course] the cessation of family connexion with the uterine brother and the father's brother and the rest. Therefore the son begotten by the *simple* adopted son should likewise perform his father's *sapiṇḍikaraṇa*,[3] *páravaṇa*, *Śráddha*,[4] and the like ceremonies in conjunction even with the [original] adopter. So his son [is to perform]. However, Kátyáyana, in opening the discussion about the son of two fathers, says:—"Now since sons, who are either adopted,

[1] For the to-be-adopted son already exists; the capacity or relationship only is to be legally created.

[2] Mit. ch. ii., l. 56, p. 1.; Vír. l. 191, p. 1; Vya. M. and Kam.

[3] Associating the deceased person with the three preceding ancestors on the twelfth day after death.

[4] This Śráddha is performed in honor of the manes of the deceased, also on the 12th day after death, when he has died as a *sannyási* or an ascetic.

purchased, or born of an appointed daughter, have no *pravara* [for themselves] owing to their having been taken by another, they are [considered to be] *Dvyámushyáyaṇa* (sons of two fathers).[1] [Again] if there be no offspring of these [adopters] by their own wives, they [the aforesaid secondary sons] should take the heritage, and give the funeral oblations to three ancestors. If there be no [offspring] to either [the giver or receiver], they should give the oblations to both, in one single *Śráddha*, but making *Piṇḍa* (or rice balls) separately in honor of each, and having addressed their manes separately, both the acceptor and the genitor up to the third ancestor. This has reference to the son of two fathers; because of his premising, they become the sons of two fathers. If either the natural parent or the adoptive father have no other male issue, the *Dvyámushyáyaṇa*, or the son of two fathers, shall present the *piṇḍa* or funeral oblation to him [or to both], and shall take their property; but not if there be other male issue. If both have *auras* or legitimate sons, he shall not offer to either. He should take a quarter of the share allotted to a legitimate son of his adoptive father; from the (following) text of Vasishṭha: "When a son has been adopted, if a son of the body be afterwards born, the adopted son shall be a sharer of a portion equal to a fourth"[2]; and likewise this text of Kátyáyana, "If a legitimate son be born, the rest are takers of a fourth share, provided they belong to the same class; but if of a different class, they are entitled to food and raiment only."[3] The reading in the Kalpataru is 'takers of a third part.' *Savarṇáh*, or *those* of the *same class*, [are] according to Vijñáneśvara[4] *kshetraja* (the son of the wife), the son adopted, and the rest.[5] But if [other] sons are wanting to both, then he should perform a single *Śráddha*, &c. to both also in the manner previously declared. However, Kárshṇájini says in the Hemádri: "As many ancestors as there may be [in both the families], their *Sapiṇḍíkaraṇa* (or conjunction with the dead) should be performed by the adopted sons and the rest with their own fathers, &c.; their sons [should perform it] with two forefathers; and their grandsons with one. As for the fourth descendant, it is [to be done] at his pleasure. Accordingly the *Sapiṇḍa** relationship [of these sons] is mentioned as up to the third degree.[6] At the regular seasons there is no distinction of degrees, but on the [anniversary] day of death, they should perform the Śráddha in reference to one according to the proper rites." This passage also is in the same sense as the text of Kátyáyana. The

* ४४

[1] Kam. [2] Mit. ch. ii., l. 55, p. 2; Vír. l. 190, p. 2; and Kam. [3] Id.
[4] Mit. ch. ii., l. 55, p. 2. [5] Mit. ch. ii., l. 54, p. 2.
[6] Not up to the seventh degree. Dattaka Mimánsá, p. 34; Dattaka Chandriká, p. 58.

meaning is this: The *Dvyámushyáyaṇa,* or sons of two fathers by adoption and other [sons] should perform the *Sapiṇḍíkaraṇa*[1] of those dying in the families of both the natural and the adoptive fathers with their own [respective] ancestors. But the sons of those adopted and the rest should perform their *Sapiṇḍíkaraṇa* [of the adopted and the rest] with both the natural and the adoptive [father]. Their grandsons also should associate their real father with their adoptive grandfather and their real great grandfather. The fourth descendant, *i.e.* the great grandson [at his pleasure], may invoke the adopter or not. *Chhandah* [means] wish or pleasure. But the natural father [of the adopted] he must invoke. *Sádháraṇeshu Káleshu* (at the regular seasons,) that is at the *amávásya* (days of new moon) and other regular seasons, the *Śráddha* and other ceremonies of forefathers of the natural and adoptive fathers are to be celebrated. But on the anniversary of death, having invoked the single person only, he should perform the *Ekoddishṭa*[2] *Śráddha* for him. Some however say, since the rite of simple adoption is nowhere mentioned, he [the simple adopted son] does not exist. Also that one taken even without an agreement is a son of two fathers [*Dvyámushyáyaṇa*], since there is no rite prescribed for the agreement, 'he belongs to us both.' And by him alone either a double *Śráddha,* or a single one, is to be celebrated by invoking his natural and adoptive fathers on the *Amávásya* (day of the new moon) and other days. And the son of the adopted should perform the *Sapiṇḍíkaraṇa,* the *párvaṇa Śráddha,* and the rest of his genitor and his acceptor. And so also their sons, &c.; so it is said. This is open to question. Now, although the phrase *simple adopted* is nowhere mentioned in so many words, still, however, this [meaning] certainly results as a matter of course from the declaration of the entire cessation of connection with the natural father and the rest by the above mentioned text of Manu, the absence of which cessation in fact exists in the case of the *Dvyámushyáyaṇa* adopted. Further, a marriage in the family of the natural father within seven degrees is altogether illegal according to this text of Gautama: "With the paternal *Bandhus* or kinsmen on the progenitor's side up to the seventh degree, and with those on the mother's side up to the fifth," &c.[3] This would be unmeaning in the case of a *Dvyámushyáyaṇa* [adoption], because the *sapiṇḍa* relationship [to the progenitor] always exists in that case. Therefore [the phrase] 'simple adopted' must necessarily be used to make the said text [of Gautama] intelligible. Because, in the case of the simple adopted, the cessation of *sapiṇḍa* relationship

[1] See p. 59 above.

[2] This *Śráddha* is always performed in honor of a single deceased individual.

[3] Dattaka Mímánsá, p. 31.

is spoken of. Moreover in the *Pravarádhyáya*[1] [it is said] "They who become *Dvyámushyáyaṇas* (sons of two fathers), whether by being adopted, purchased, or the like, cannot take in marriage any one of either *Gotra* after the example of Śaunga and Śaisiṛa."[2] In this [text] also the term both *Gotras* of the *Dvyámushyáyaṇa* are spoken of. While Manu declares the cessation of connexion with the *Gotra* (family) of the progenitor. So here is a contradiction between the two texts which is to be reconciled only by the distinction of *dattaka* (the adopted) [into two classes], *viz.*, *Kevala Dattaka* or the simple adopted, and *Dvyámushyáyaṇa* or the son of two fathers. Hence the simple adopted son is truly established. Therefore Bhaṭṭa Someśvara satisfactorily reconciles the doctrine of Manu, "that there was a cessation of the *Sapiṇḍa* relationship between Arjuna (as) the son of Kunti [born] after she was given in adoption by [her father] Śura to Kuntibhoja, and Subhadrá, the daughter of Vasudev who was the son of [the same] Śura," with the text of Gautama that "marriage with the daughter of the natural father is prohibited," and which latter text says that Arjuna should not marry the said Subhadrá, by an explanation founded on a *Vártika* text that there was no relationship [between Arjuna and Subhadrá] after the adoption. But the same author says that "the *Sapiṇḍa* relationship of Kunti with the family of Śura, even up to the seventh degree, is declared by Someśvara, on the authority of the text of Gautama;" but that is a deduction made without studying the book. For, he (Bhaṭṭa Someśvara), having in the previous part declared the cessation of the *Sapiṇḍa* relationship, speaks of the text of Gautama as referring to the prohibition [of marriage] in the family of the natural father, not for indicating *Sapiṇḍa* relationship. Thus the simple adopted son and 'a son of two fathers' being established, the *Samvit* or condition [in the case of the Dvyámushyáyaṇa] to the effect that "he shall belong to us both," is likewise established, because [in the condition there is a visible object, namely, that] the adopter may know him to be the son of both the fathers. Again, the *Sapiṇḍa* relationship of the simple adopted son extends in his adoptive father's family to seven degrees on the father's side and to five degrees on the mother's side. But, says Vṛiddha Gautama, "the sons given, purchased, and the rest whose ceremonies have been performed in the adopter's *Gotrá*, enter the *Gotrá* by the observance of the ceremony; but the *Sapiṇḍa* relationship is not thereby created." Likewise says Bṛihat-Manu: "Sons given, purchased, and the rest

[1] There is a chapter in each *Kalpa Sútra* relating to *Pravaras*. The one here alluded to is probably ch. 21 of the Satyáshádha Śútra of the Black Yajurveda, which is more extensive than others.

[2] See Dattaka Mímánsá, (p. 4,) refers this text to the *Prayogapárijáta*. The Sanskáramálá of Gopínathabhaṭṭa does so likewise.

retain the *Sapiṇḍa* relationship with the natural father, to the fifth and the seventh degrees [by the mother's and father's sides respectively]; but enter the *Gotra* only of the adoptive father";* and even as
* 84 to what Nárada [says], "sons reared for religious merit in the several *Gotras* as begotten sons, become merely participators in a share and [the oblations or] the funeral cake"; all these [texts] are all without a foundation. If they have any, they are given for the purpose of expressing the absence of *Sapiṇḍa* relationship up to the seventh degree of the *Dvyámushyáyaṇa* in the adopter's family. Because in the case of the simple adopted son, *Sapiṇḍa* relationship to the 10 seventh degree in the adopter's family is declared by the aforesaid text of Gautama, and by the text of Manu is declared the cessation of the *Sapiṇḍa* relationship in the family of the natural father. As for the following position laid down by certain worthy authors in discussing the subject of *Sapiṇḍa* relationship [namely]: "If (an adopted son's) investiture and other initiatory rites have been celebrated in the family of his progenitor, his *Sapiṇḍa* relationship to his progenitor's family continues to the fifth degree (on the mother's side) and to the seventh degree (on the father's side), but up to three degrees in the family of the adopter, by reason of the absence of procreation and the 20 non-performance of investiture, &c. [in the adopter's family], producing inferior paternity in the adopter. If, however, [the adopted son] be initiated in the *Gotra* or family of the adopter, [*Sapiṇḍa* relationship] with the adopter and the rest up to the seventh and the fifth degree does arise."[1] But we are not aware of the source of this. And also if the paternal relationship does not arise by reason of absence of procreation and investiture and the like, in what manner is the adopted son's *Sapiṇḍa* relationship to three degrees, or his duty of performing the *Śráddha* and other ceremonies for the adopter and the rest, produced? [Answer.] Paternity and *Sapiṇḍa*-ship are not necessarily 30 co-extensive, so that the absence of the one might lead to the absence of the other. The position really is [this, that] *sapiṇḍa* relationship [of the adopted] to the adopter and the rest is even declared before by the text—"Up to the seventh from the paternal *Bandhus* [or kinsmen, &c.] of Gautáma and others."

Now the rites of gift and acceptance of a son.

In this matter all[2] have the power of giving any of the several sons except the eldest; but the right of accepting appertains to those to whom no son is born, or whose sons are dead. Women, whose husbands are living, have authority to take with their permission; in default 40 of their husbands, with that of their own fathers and the rest. A Śúdra

[1] Sanskára Kaustubha l. 49, p. 1.

[2] Classes are intended.

may take a daughter's or sister's son [if available] [1] and no other. But others [of superior class] should take the nearest *Sapiṇḍa*; in default of him, the remote, but none of another class.

Now the giver, on the day [fixed] for [acceptance] having duly called to mind [and recounted] [the proper] time, &c., and having solemnly declared, *viz.*, 'I am going to give my son in adoption in order to create [between my son and his adopter] those various reciprocal obligations which arise from the various relations, such as that of father and son [at present] existing between me and the like on the one hand, and this (my) son on the other'; should perform worship to Gaṇapati, the *Svati-váchana* (a benedictory preliminary rite) Mátṛiká Pújá,[2] Vṛiddhi-Śráddha.[3] As regards the adopter, he having fasted on the day preceding that [fixed] for the acceptance [or adoption], and on the next day having summoned his kinsmen and announced to the king his [intended] adoption, and having called to mind the time and [considerations[4]] and the like, having thus solemnly declared in order that the various mutual relations such as that of father and son, at present existing between the person I am going to adopt as a son, and his progenitor, and the like, may cease; and in order to create between this person on the one hand, and me and the like on the other hand, various reciprocal obligations consequent on the various mutual relations, such as those of father and son; I am going to adopt [this person as] a son; and having performed the worship to Gaṇapati, *Svaśti váchana*, Mátriká Pújana, Vṛiddhi-Śráddha, and having duly invested the Áchárya with the officiatorship; and having worshipped him (the Áchárya) with gifts, with ear-rings, a finger-ring, a pair of Dhotars,[5] turban, and having performed Madhuparka in his house and the rest, let him give a feast to three Bráhmaṇás and to his kindred.

Then the Áchárya having thus solemnly resolved, I am about to do my proper duties, and having performed the marking out of the altar and the other (acts) as far as the consecration of the fire inclusive, should celebrate the rites enjoined in the Vedas and the rest as far as the purifying of the clarified butter inclusive.

Then the acceptor having gone near the giver should beg, 'Give me the son'; and the giver, with relation of the five prayers (the initial words of the first of which are) *yeyajñena*,[6] having called to mind

[1] See p. 54 above.

[2] Worship of certain deities headed by the 7 Mátrikas. [See Náráyaṇa-Bhaṭṭa's Prayoga-Ratna, l. 8, p. 1.]

[3] Śráddha on an addition to the family.

[4] A certain formula is laid down in works on ceremonies proper to such occasions called *Sankalpa* or determination.

[5] A piece of cloth.

[6] See Ṛik-sanhitá, *ashṭaka* 8, *adhyáya* 2, *varga* 1, *rik* 1—5.

the time and the rest, having repeated his motives as above detailed, should declare, I give you this son* adorned with ornaments according to my ability. These five Mantras beginning with *yeyajñena*, of which Manu's son Nábhánedishṭha [is the Ṛishi], the deity is Viśvedevah, and the metre is *Jagati*, are [now recited] to properly effectuate the gift of the son.

* ४६

Then the acceptor having accepted him with the prayer *Devasyatvá*,[1] and having repeated the mystical prayer to *Káma*[2] [the god of desire] as laid down in his own *Śákhá* (or branch of the Veda), and having repeated in a low voice the text *Angátangád*,[3] &c., having smelt the forehead of the child, he should carry him into the inner apartments of his own house adorned with clothes, &c. accompanied with rejoicings. Next the Áchárya having performed the setting up of the clarified butter and the rest as far as the portioning of it inclusive, and having performed a sacrifice with the clarified butter, with the *Vyáhṛiti* incantations, first each *Vyáhṛiti* separately, and afterwards all the *Vyáhṛitis* together, he should sacrifice to the fire with boiled rice. The principal sacrifice with the boiled rice for effectuating the son's adoption would begin with Mantra commencing with *Yastváhṛidá*[4] [the *Ṛishi* of which is] *Vasuśruta*, [the deity is] Agni (fire) and [the metre is] *trishṭubh*. He should begin thus: *Omyastváhṛidá*, [&c.] and pour the offering by invoking 'this is to Agni, not to me.' Again, he should sacrifice [with the Mantra] beginning with the words *Tubhyamagne*,[5] &c. [both the Ṛishis and deities of which are] *Súryásávitri*, [the metre is] *Anushṭubh*; [the concluding invocation should be] 'this is for *Súryásávitrí*, not for me.' Again, with five texts, the initial words of the first of which are *Somodadat*,[6] &c.; [the *rishi* and the deity of which are] *Súryásávitrí* and [the metre is] *Anushṭup*. The beginning [and end] as before. He should conclude the rest of *Homa*, or sacrifice with [the *Mantras*], *Svishṭákrit* and the rest. [End of the rite of adoption.]

---

To return to the subject in hand. Kátyáyana states a distinction in dividing debts:—"The debt of the father, one incurred on account of the father, one's own debt, [that is] one incurred by oneself, [these] should be cleared on a partition with brothers." *Pitryarṇasambandham* [that is] incurred in order to discharge the father's debts. *Atmíyam* [that is] debts contracted by another, for the maintenance,

---

[1] See Taittiriya-Aranyaka; *adhyáya* 3; *anuváka* 10.

[2] See Áśvalayana's *Śrauta sútra*, the first *shaṭka*, *adhyáya* 5; *kaṇḍiká* 13; *sútra* 35 (p. 431).

[3] Ṛik-sanhitá, *ashṭaka* 8, *adhyáya* 8, *varga* 21, *ṛik* 6.

[4] Taittiríya-Sanhitá *kánḍa* 1, *adhyáya* 4, and the last *anuváka*.

[5] Ṛik-Sanhitá, *ashṭaka* 8; *adhyáya* 3; *varga*, 27; *ṛik* 3.

[6] Ṛik-Sanhitá, *ashṭaka* 8; *adhyáya* 3; *varga* 28; *ṛik* 1.

&c. of one's own family. The same [author says]:—"A debt contracted by a brother, a paternal uncle, or a mother, for the sake of the family, must be fully discharged by the partakers of the heritage at the time of partition."

In a case where the debt is less than heritage, the same [author says]:—"But havingp aid the debt, and also what was bestowed through affection, they should divide the balance." *Pradattam* [that is] promised [through affection]. Nárada:—"What remains after discharging the father's donations, and after payment of his debts, may be divided by the brothers; otherwise their father will remain a debtor." *Pitridáya* [that is] what had been promised by the father. The same:—"What has been given for religious purposes and through affection, and the debt which has been incurred by himself, that [debt and] the visible [wealth] let them divide; [any other] *dána*, or giving, is not to be made out of the paternal wealth." The meaning is this: What has been given, [*i. e.*] promised for religious purposes and through affection; what has been incurred by the father himself; such debts and the visible wealth should be divided. There is to be no giving from the paternal estate of anything other than their debts.[1]

In case of suspicion [arising] of concealed effects, [says] the same [author]:—"A house, arable land, quadrupeds and the like visible effects, let them divide. If there be a suspicion of concealed effects, an oath is prescribed [as the proper proof]. Thus has Manu declared that household utensils, vehicles [beasts for riding, &c.] milch cattle, ornaments and workmen are visible and are to be partitioned. If effects [are] suspected [to be] concealed, [its distribution] should be made [after detection] by the *kośa* ordeal. *Karmiṇah*, slaves and the like. Hence in the chapter on ordeals the *kośa* ordeal itself has been fixed in such matters by this very [author]:—"In sustaining the truth of doubts in partition among partakers of heritage at all times, [and] in settling a multitude of *kriyá* (proofs), the *Kośa* ordeal should be prescribed."

## IMPARTIBLE PROPERTY.

Impartible Property.

Of *impartible property* Manu [ch. ix., v. 206], says:—"Wealth, however, acquired by learning, belongs exclusively to him who acquired it; so does a gift made out of friendship, or along with a *madhuparka* [*i. e.* on the occasion of a wedding, or out of respect for a guest when honey, curds, and clarified butter are offered]. Vyása:—"That which is acquired by learning, or by valour, or received as *Saudáyika* (a nuptial gift from affectionate kindred), belongs at the time of partition to him

[1] The conclusion appears to be that the rest must be divided.

[who acquired it], and shall not be claimed* by coheirs."[1] The
* 89 term *Saudáyika* will be hereafter explained. This wealth must be understood to be acquired without detriment to the parental estate.

Thus also Yájñavalkya [ch. ii., vv. 118, 119]:—"Whatever else[2] is self-acquired apart from and without detriment to the parental estate, or is a friendly or a nuptial present, does not belong to the coheirs. [Similarly] he who recovers hereditary property once taken away may not give [to or share it with] his coheirs, as also what has been gained by learning."[3]

With regard to land hereditarily descended [and] recovered, however, Śankha speaks of a special rule:—"If one single-handed recovers hereditarily descended land formerly lost out of the heritage, his coheirs will get it according to their respective shares after giving a fourth part [of the same] to him."[4] [In other words] they shall give a fourth portion of the recovered [land] to the recoverer, and [afterwards] share the rest along with the recoverer. Manu [ch. ix., v. 208]:—"That which one gains by his own exertions without detriment to the paternal wealth, or by his learning, need not be given to the coheirs."[5] Vyása:—"He who obtains wealth by his [own] ability, without availing himself of the paternal wealth, or by his learning, need not give it to the coheirs."[6]

Kátyáyana thus defines *Vidyádhana* [gains of learning]:—"That wealth is said to be *Vidyáprápta* (gained by science) which is obtained by means of learning acquired, from another whilst subsisting on boiled rice furnished by a stranger."[7] The same [author] further elucidates this subject:—"That is to be known as wealth gained by learning which is gained by science after laying a wager therefor, and it is not liable to division at [the time of] partition. What is obtained from a pupil, or a spiritual preceptor, or for [proposing] a question, or from the determination of a doubtful point, or by the commendation of one's knowledge [by others], or by [success in] controversy, or by superior learning [or recitation], has been declared [to be] *Vidyádhana* (wealth gained by science), and is not divided at [the time of] partition. The same law applies to artizans in respect of excess [given as reward for skill] over [and above] the value [of the article]. What has been gained by learning, or from one for whom a sacrifice has been per-

[1] Mit. l. 50, p. 1; Vír. l. 220, p. 2; Kam.; Vya. M.
[2] This has reference to what has been stated by that author in the preceding part.
[3] Vír. l. 220, p. 2; Kam. and Vya. M.
[4] Mit. l. 49, p. 2; Vír. l. 220, p. 2; Kam.; Vya. M.
[5] Mit. ch. ii., l. 50, p. 1; Vír l. 220, p. 2; Kam. and Vya. M.
[6] Kam.
[7] Mit. ch. ii., l. 50, p. 1; Vír. l. 220, p. 2; Kam. and Vya. M.

LIBRARY OF THE BOMBAY

formed, or from a pupil, has been termed *Vidyádhana*; what is otherwise acquired is common [property]. Bṛihaspati has said 'that which is gained by vanquishing an adversary, by learning after laying a wager therefor, should be known to be *Vidyádhana*, and [it] is not to be divided.' Bhṛigu has said 'what is gained by [successfully] undergoing a test of one's own learning, or from a pupil, or by performing a sacrifice, or such like things, is *Vidyádhana*.'"[1] *Upanyása* is explained in the Madanaratna [to be] the recitation of the Vedas in the several modes of stringing together the different *padas* or words, such as *Krama, Jaṭá*, &c. Others say, it means the exposition of abstruse topics in an assembly. The word *Paṇapúrvaka* [after laying down a wager] is [to be] connected with *Upanyasta* (gained by learning). *Śansanam* [means] a commendation of one's own knowledge [by others]. *Prádhyayanam* [means] superior learning or recitation. *Śilpishvapi*, &c. [means] the above-mentioned rule with regard to *vidyá* (science or learning) applicable to artizans also. *Múlyádhikam* [means] a reward [given for skill over and above the price] out of pleasure. *Ṛitvik-nyáyah* [means] just as a *Ṛitvik* or an officiator shows his learning, and is given merely as an example. Now in all these cases impartibility will exist only if the acquisition of the learning and of the wealth therefrom has been independent of the parental wealth.

If otherwise, the wealth is partible. Hence, says Kátyáyana:—"Bṛihaspati (ordains) divisibility of wealth acquired [either] through the father by brothers who have acquired their science after being instructed in the family, or through valour."[2] Even in case of detriment to parental wealth, the acquirer gets a double share according to this text of Vasishṭha:—"Of them [brothers], he who has himself acquired [something], shall take only two shares [of the same]." Nárada mentions a distinction in [the case of] *Vidyádhana* of a certain kind:—"He who maintains the family of a brother, while engaged in study, will get a share from the [latter's] *Vidyádhana*, though not previously promised."[3] *Aśruta* [means] unlearned, according to the Madanaratna; but the proper sense would be—he who has got no promise [from the student brother] that a share would be given.

Gautama states a distinction with regard to wealth acquired without detriment to the parental wealth:—"A learned man may voluntarily give to his learned coheirs wealth acquired by himself."[4] A *Vaidya* is he who possesses *Vidyá* (science). The meaning is, he (the *Vaidya*)

---

[1] Kam. and Vya. M. [2] Kam. and Vya. M.
[3] Mit. l. 50, p. 1; Vír. l. 220, p. 2; Vya. M. and Kam. [4] Kam. and Vya. M.

may at his pleasure give [shares] to his learned brothers.[1] Kátyáyana:—* "A learned man need not in any case give [a share
* 82 of his] *Vidyádhana* to unlearned coheirs; but he ought to share it with those [of his coheirs] who are his equals or superiors in learning. [But] a learned man, if unwilling, may not give a share from his wealth to [even] a learned coheir, if such wealth be acquired by him without help from parental estate."[2] Madana says that this exception applies, if the unlearned brothers possess other property; [but that] in the absence of such property a share must be given even to them.[3]

Bṛihaspati declares the impartibility of gifts from the father and [such] other persons:—"That which has been given by the paternal grandfather, the father, or the mother, as well as that gained by means of valour and the wealth of the wife, belongs to him [the acquirer]: it shall not be taken from him [at the partition]."[4] Nárada:—"Property of three kinds, *viz.*, the gains made by means of valour, the wealth of the wife, and the emoluments of learning, and also a gift made through pleasure by the father, are impartible."[5] Kátyáyana:—"That wealth which is *Dhvajáhṛita* is declared [to be] impartible. What is seized in war after routing the enemy's forces and risking one's own life for the master is termed *Dhvajáhṛita*."[6] The same:—"Whatever is obtained as a reward from a master pleased at the performance of a gallant action, endangering one's life, is said to be gained by valour."[7] Here Vyása states a special rule:—"Brothers are sharers in that wealth which one [of them] obtains through valour or the like by using a vehicle or a similar thing out of the common property. Two shares shall be given to him [who gains it], while the rest shall share it [with him] alike."[8]

Vyása thus defines the nature of *saudáyika*:—"That wealth is said to be *saudáyika* which is obtained by a married woman, or a maiden from the husband or from the father's house, *i. e.* family [viz.] from brothers or parents."[9] Kátyáyana:—"What is gained at the time of marriage with a maiden of the same class, is termed *Kanyágata* (received with the maiden). This [wealth] is declared to be pure and calculated to promote prosperity. That wealth is known to be *Vaiváhika* (nuptial) which comes with the bride. Wealth of these kinds should be known as the means of performing duty [*i. e.* religious

---

[1] Vya. M. [2] Kam. and Vya. M. [3] See Vya. M.
[4] Vya. M. and Kam.
[5] Mit. l. 47, p. 1; Vya. M. and Kam.
[6] *Dhvaja* means the standard of war. See. Vya. M. and Kam.
[7] Id. [8] Id. [9] Vir. l. 215, p. 1; Kam. and Vya. M.

rites]." That is known as *kanyágata* (bridal wealth) which is obtained in a marriage celebrated after the form called *Ársha*, *i. e.* by receiving a pair of cows, or in a similar manner.[1] Here also, as in the case of *Vidyádhana*, impartibility [will be the rule], only if parental wealth has not been availed of. [On the other hand] wealth acquired by means other than learning, &c. is liable to division. And so says Manu [ch. ix., v. 205]:—"If wealth comes to all the unlearned brothers [before] partition from their labour in agriculture, there will be an equal division [of that wealth] even though its acquisition has been independent of parental wealth. This is the settled rule."[2] *Ihá* [in this verse] means agriculture, pursuits, &c. *Apitrya* [means] without assistance from the parental wealth.

Other impartible [things] are also spoken of by Manu [ch. ix., v. 219]:—"Clothes, vehicles, ornaments, prepared food, water, women, sacrificing priests,[3] and ways[4] or pasture-grounds are declared to be impartible." *Pattra* [means] a vehicle. Clothes, vehicles and ornaments belong to him alone who possesses them, provided they are of equal value, but if they are of more or less [than those of others], then they[5] must be divided. As to clothes, &c. used by the father, they should be given to him who partakes of his Śraddha (or obsequial feast) as directed by Bṛihaspati [thus]:—"The clothes, ornaments, bed and the like, as also vehicles and the like, appertaining to the father should be given to the partaker of funeral repast, who [*i. e.* the partaker] should be propitiated with unguents and flowers."[6] Manu gives a special rule in the case of goats, &c. being uneven in number [ch. ix., v. 119]:—"The uneven [remainder of] goats, sheep, or a single beast with uncloven hoofs should not be divided; a single goat, sheep, or beast with uncloven hoof is for the eldest alone."[7] Prepared food and water are to be enjoyed by all according to need. *Striyáh* are female slaves. [When] uneven in number, they are to be made to work by turns[8] as may be found workable; when even in number, they are to be divided. The kept mistresses of the father, however, though even in number, should not be divided, as directed by [the following text of] Gautama:—"There is

[1] Mit. ch. i., v. 59, [see l. 8, p. 1]. [2] Kam.

[3] Mit. ch. ii., l. 50, p. 2:—Wells, tanks and gardens, and charitable dwellings [such as *Dharmaśálas*] are the objects, indicated by Vijñáneśvara, as those signified by *Yoga* and *Kshema*. My rendering is based on *Kullúkabhatta*. (See Víramitrodaya l. 221, p. 1.) The Smṛiti of Laugákshi is quoted as authority by both.

[4] *Prachára* is stated to be "ways to houses or gardens," both in the Mitákshará l. 50, p. 2, and Víramitrodaya l. 221, p. 1; see Vya. M.; Kam.

[5] See Kullúká's commentary on the above verse l. 171, p. 2.

[6] Mit. ch. ii., l. 50, p. 2; Vír. l. 221, p. 1.

[7] Kamalákara applies this to goat-herds, &c. who live by tending goats. See Mit. l. 50, p. 2; Vír. l. 220, p. 1; Kam. [8] Vír. l. 158, p. 2.

no division of women appointed [by the father] for enjoyment.[1] By the word *yogakshèma*, the Kalpataru says, is meant counsellors, family priests, and the like.[2] * Laugákshi however says :—"The learned explain *kshema* to mean meritorious works,[3] and *yogam* as meaning (wealth obtained by) sacrifice, both [of these] as well as beds and seats are declared to be impartible."[4] Here *púrtam* means a tank, garden, &c. and *Ishṭam* a sacrifice, a feast to Bráhmaṇas, and the like. The meaning is, whatever wealth has been given up and set apart for such purposes with the consent of all when in an undivided state by a [certain] man, it should be used by that alone for that same charity, and not by another, nor by all together. *Prachára* is way to the house, or the like, as also a pasture-ground for cattle, &c.

Śankha and Likhita observe, "there is to be no division of a dwelling, or of waterpots, or of ornaments and used clothes,"[5] and Vyása [says], "the gains of presiding at a sacrifice, a field, a vehicle, prepared food, water, and women, are not divisible among kinsmen even up to the thousandth generation.[6]" Thus is declared the impartibility of a house and a field. But this is applicable to a house used for religious purposes, and to land used as pasturage for cattle and the like; [or else] these texts ordain the prohibition of a division to [sons by] Kshatriya [wives and others] of those two [*viz.*, house and field] acquired by accepting donations as already noticed,[7] or these indicate or enjoin a partition of their value instead of their actual division in specie if their value be small. Bṛihaspati notices a distinction in regard to clothes, &c. :—"Those that affirm that clothes and such things are impartible, have not thought [properly]. [For] the wealth of the affluent depends on clothes and ornaments. [Such wealth] will remain unemployed, when kept undivided; [on the other hand] it cannot be given to a single person. It should [therefore] be divided with some skill; otherwise it will become useless. Clothes and ornaments are divided [by taking proceeds after] sale; debts [evidenced] by writing after recovery; and prepared food by an exchange for undressed grain.[8] Water from wells which have flights of steps, and wells from which it is drawn by buckets, &c. is [to be] enjoyed according to need; a single female [slave] should be made to work at the houses [of the several sharers] according to their shares;

---

[1] Vír. l. 221, p. 1; Mit. ch. ii., l. 50, p. 2; Kam. and Vya. M.
[2] See likewise Vijñáneśvara, Mit. l. 50, p. 2. [3] Such as wells, tanks, &c. Id.
[4] Vír. l. 221, p. 1; Mit. ch. ii., l. 50, p. 2; Kam. and Vya. M.
[5] See Kam. [6] Mit. ch. ii., l. 50, p. 2; Kam. and Vya. M.
[7] See above, l. 20, p. 34, and. Mit. ch. ii., l. 50, p. 2.
[8] Some say that prepared and unprepared food being taken together, should be divided. See Kam.

if many, they should be allotted equally. The same rule applies to [male] slaves. Fields and raised embankments should be divided according to the several shares. Ways and pasture grounds should always be used by sharers in due shares."[1] *Udgráhya* means [debts] after recovery from the debtors should be divided.

Kátyáyana:—"Wealth described in a deed and assigned for purposes of charity, and water, slaves, hereditary right or income, worn clothes or ornaments, and whatever may be unfit for division, should be used by brothers according as they have been enjoyed [during past] time."[2] *Dhanam*, &c. [means] such wealth as has been set apart for charity and noted in a deed. *Udakam* [means] water of wells, &c. *Nibandha* [means] *Vritti* or [hereditary right or income]. *Nánurúpam* [means] unfit for division.

[End of the Section—Impartible property.]

---

Yájñavalkya [ch. ii., v. 126] thus ordains division of property concealed by deceit from brothers, &c.:—"The settled rule is that coheirs should again divide in equal shares the wealth that, being concealed by one [coheir] from another, is discovered after partition."[3] *Anyonyápahritám* means concealed by the eldest from the youngest and *vice versâ*. But, says Manu [ch. ix., v. 213]:—"He who being the eldest, through avarice defrauds his younger [brothers], shall forfeit his status as an elder brother, and shall remain without his share, and shall be chastised by the king."[4]

The term *Jyeshṭha* signifies every one who is a taker of heritage on the analogy of the stick and cakes[5] strung over it. The meaning is that when blame attaches even to the eldest, it must [necessarily] do so in the case of juniors. Hence [says] Gautama:—"He who keeps a sharer from off his share, is destroyed by that other; if he is not [so destroyed], his son or grandson will be so."[6] *Bhâginam* [means] to one who has a right to a share. *Bhágát nudate* [means] that he keeps away [the other] from off the enjoyment of the share. '*Sah*' or the driven [party]; *chayate* means destroys; *enam*, *i. e.* the usurper. The meaning is that if he, the deprived sharer, does not destroy him* [the usurper], he destroys his son[7] or grandson.

---

[1] Kam. and Vya. M.; Vír. l. 160, p. 1. [2] Kam.

[3] Mit. ch. ii., l. 52, p. 2; Vír l. 220, p. 1; Kam. and Vya. M.

[4] Mit. ch. ii., l. 53, p. 2; Vír. l. 220, p. 1; Kam. and Vya. M.

[5] In some Southern provinces of India, the cakes, and such like articles of food, are carried after being tied to a stick called a *daṇḍa*; when a cake is asked for, the servant brings the stick, whereby he leaves it to the master to choose any he likes. So here the *elder* stands for any brother.

[6] Mit. ch. ii., l. 50, p. 2; Vír. l. 220, p. 1; Kam. and Vya. M. The Mitákshará and the rest speak of this text as a Vedic one.

[7] Mit. ch. ii., l. 53, p. 2; Vír. l. 220, p. 1.

Nárada :—"The wealth acquired [by a man] after separation belongs to him alone; [but] of what has [since] been recovered after being stolen or lost, and [the kind of property] before mentioned there shall again be [a division]. *Práguktam*, (that is property before mentioned,) refers to [property] concealed by one from other coheirs. *Punarbhavet* [means] there shall again be a division. This is understood. Manu :—"If any common property is discovered after partition, that partition need not be recognised; it must be made over again."[1]

In case of denial of partition by any one, Yájñavalkya states rules for decision [ch. ii., v. 149] :—"On denial of partition the fact of the division may be established by [the testimony of] kinsmen, relatives, witnesses, documents, and houses or fields separately held."[2] *Yautakaih* [means] separately allotted, and is to be construed as an adjective qualifying both houses and fields.[3]

Nárada :—"A dispute among coheirs with regard to the fact of partition is to be determined by [the testimony of] kinsmen, by the deed of division, or by the introduction of separate transaction of affairs."[4]

The same [says] :—"The *Dharma* (or religious duty) of unseparated brethren is single. After partition even that becomes separate for each."[5] Here the word *Avibhaktánám* or unseparated is the substantive, while *Bhrátṛiṇám* or brethren is merely an adjective not to be understood in its specific sense, [but rather as indicative of a class]. Therefore [it comes to this, that], in an unseparated family, whether it consist of father, grandfather, sons, grandsons, father's brother's brothers, brother's sons, or any [such] member, the religious duty is single. Hereby the rule which enjoins that where there is union of time, place, agent, &c. one observance suffices even if the ritual be different; yet that rule is extended by the express words of the texts to cases even where plurality of unseparated agents exists. Hence[6] the rites connected with the worship of the *Vedik* and *Smárt* fires are of course separate for unseparated persons; as the relations of those fires as *Ahavaníya*, *Ávasathya*, and the like, differ in the case of the different agents. In like manner the Śráddha, by the paternal uncle, brother's son, &c. on the *Amávásyá* and such [other seasons] are separate owing to a difference of deities. In the case of brothers without the sacred fire,

[1] Mádhava also refers this text to Manu; but it does not appear in the published editions.

[2] Vír. l. 223, p. 1; Kam. and Vya. M.

[3] Vír. l. 223, p. 1.

[4] Mit. ch. ii., l. 64, p. 1; Vír. l. 223, p. 1; Kam. and Vya. M.

[5] Mit. ch. ii., l. 64, p. 1; Vír. l. 223, p. 1; and Kam.

[6] The word ought to be *but*.

the [said] rite is single, as the deity is one and the same. Where there is a difference of place, owing to residence abroad, the Śráddhás are even separate. In the case of those who maintain the fire, the rites in connexion therewith are separate, while the worship of household deities, the *Vaiśvadeva*, and such other rites are single. Therefore, says Śákala:—"Of those whose food is cooked in one place, the worship of household deities, as also the *Vaiśvadeva*, is single; while in the case of divided members, these are performed in each house separately." As to what Áśvaláyana says in the Párijáta[1]:—"Of those who live and cook their food in one place, even if [previously] separated, the head alone shall perform those four sacrifices which follow the *Vágyajña*.[2] Let those men of the twice-born classes, who live on separately dressed food, who being separated have reunited, perform these rites separately every day before meals." It refers to persons reunited, [after separation,] as is [clearly] indicated by the words of those separated who yet live on food cooked in one place, as well as those who, being separated, have reunited. Hence [it comes to this, that] in case of separate dressing of food among the reunited, the great rites (*Mahá-yajña*) are separate. *Vágyajña* [is] *Brahmayajña Vágyajñapúrvakan* [means] *Atadguṇa Samvigñána*, (a species of Bahuvríhi compound), the connotation of the members of which does not apply to, or is not included in, the object signified by the whole. If it were to be understood as *Tadguṇa Samvijñána*, then the words *Vágyajña* and the rest would be unmeaning; for it will be included in the four sacrifices, that being the first, and there being no cause for its omission. Hence *Brahmayajña* must be separately performed. But these two texts are not respected by the learned. Again, as to the texts from the Dharmapravatti:—"Unseparated sons shall together perform the anniversary Śráddha, the Darśa Śráddha, and the monthly Śráddhas of [deceased] parents.[3] When in different countries, they should perform the same separately. If [being unseparated] they should go to different towns, the *Darśa* and the monthly Śráddhas of the parents shall always be separately performed. Those [brothers] who, though unseparated, live in different towns, and subsist, each on his self-acquired wealth, shall perform the Śráddha and the [*Párvaṇa Śráddha*] separately;" and again as to the text from the Smṛiti Samuchchaya, "the Vaiśvadeva, the anniversary *Śráddha*, the Mahálaya as well as the Darśa Śráddha shall be performed separately when [the performers are] in different districts." They are interpreted by some

[1] The Mss. A and B have the reading '*Prayogapárijáté*,' thus showing which *Párijáta* is here meant.

[2] The sacrifice which consists in repeating the Vedas.

[3] These are during the first year after death.

as applying to the reunited residing in different districts. In reality these texts are unauthentic; or * they may be the work
* ५२ of some one who based them on the following reason:—A general dictum [*Nyáyá*] sanctions singleness of performance in the case of the unity of place, time, agent, and the like. An [express] text enjoins the same [under similar circumstances] save the unity of the agent. In the case of the difference of residence [of the performers] neither the text nor the dictum applies; therefore [in that case] Śráddha and the like should be performed separately. With this outline I here leave off this [subject].

Nárada declares other signs of partition:—"Separated brothers [alone] and not unseparated brothers may be witnesses or sureties, or may lend or borrow in respect of each other. Lending, borrowing beasts, food, houses, fields, presents, execution of documents, &c. income and expenditure, are, it should be known, separate in the case of the separated. Those coheirs among whom these transactions take place should be considered [to be] separate, even without a writing [to that effect].[1] *Dánagrahaṇa* [literally giving and taking] here refers to debt. The same *Dáṅagrahaṇa* is repeated in the second text for clearness. It thus means that acceptance of beasts, &c. will be productive of [separate] ownership in the case of the separated, only when accomplished by each separately; while among the unseparated, the acceptance by one alone produces the [joint] ownership of others also. *Dana-Dharmah* [means] written deeds and the like. *Agamah* [means] the collection of the principal and the interest, &c. Bṛihaspati [says]:—"They who have their income, expenditure, and mortgage dealings, distinct, and have mutual transactions in money lending and trade, are undoubtedly separate." *Vaṇikpatham* [means] the way of the Vaiśya or trade. Yájñavalkya [ch. ii., v. 52]:—"It is declared that among brothers, husband and wife, and father and son, there can be no relations of suretyship, lending, or being witnesses for each other, before partition."[2]

In the absence of all these signs, ordeal [must be resorted to]. For, the same author has said [ch. ii., v. 22]:—"In the absence of any of these [signs], resort to one of the ordeals is prescribed." As for the text of *Vṛiddha Yájñavalkya*, that "in the case of doubt regarding partition, the division must be proved by kinsmen, witnesses, and written deeds, and not by ordeal," this has reference to cases where other signs exist.

When doubts as to partition or otherwise cannot by any means be solved, Manu ordains a fresh partition:—"When there is a doubt of

[1] Mit. ch. ii., l. 64, p. 1; Vír. l. 223, p. 1; and Kam.
[2] Vír. l. 18, p. 2.

partition among coheirs, a partition must be again made, even though they may have taken up separate residences."

Nárada states the duties of separated coparceners:—"When many persons spring from one man, have their religious observances, their transactions and their implements of work separate, and do not consult each other in their dealings, they may, if they choose, give away or sell [their property], or do what they like, or, in other words, they are masters of their own wealth."[1]

*Dharmah* [means] ceremonies ordained, such as the five great sacrifices. *Kriyáh* [means] trading and similar worldly transactions. *Karmagunáh* [means] the implements of work, such as household utensils, &c., a separate possession of these indicates partition. The meaning is, that when so separated, each of them may, without the consent of the rest, give, sell, or in any other manner deal with [his own share]. As for the text of Bṛihaspati:—"Whether the coheirs are separated or unseparated, they are all alike in respect of immoveables; for no one of them has power to give, mortgage, or sell it,"[2] it disallows, according to Madana, the right of a man to alienate without the consent [of his coheirs], the produce of fields or such other immoveable property, which has remained undivided, although the coparceners were divided [in respect of moveable property]. According to Vijñáneśvara [Mit. ch. ii., l. 48, p. 1] and others [it is so enjoined] in order that no question as to partition or union might arise, and that by the consent of the separated, the transaction might be made more easy.[3]

With respect to one who being separated by his own wish, afterwards disputes [that partition], the same [author] says:—"He who having separated by his own wish, afterwards disputes that division, shall be compelled by the king to abide by his share, and be amerced for persistence [in his contention]."[4] *Anubandhah* [means] pertinacity.

---

* ५२ * ORDER OF SUCCESSION TO OBSTRUCTED HERITAGE.

Claimants to the wealth of the sonless separated person.

Yájñavalkya thus relates the order of succession to the wealth of one (dying) separated and not re-united [ch. ii., vv. 135 and 136]:—"The wife, daughters, both parents, brothers, and likewise their sons, *gotrajas* (gentiles), *bandhus* (cognates), a pupil, and

---

[1] Vír. l. 222, p. 2.

[2] Mit. ch. ii, l. 48, p. 1, where this text is referred to as one of Manu, Vír. l. 181, p. 1. Both these works read *Sapiṇḍáh* instead of *Dáyádáh*, which has been rendered in the above translation by the word 'coheir,' and which in its sense is more extensive.

[3] Vír. l. 181, p. 1.

[4] Vír. l. 223, p. 1; Vya. M.

a fellow student. Of these, on failure of the preceding, the next following in order is heir to the estate of one who has departed for heaven, leaving no male issue. This rule extends to all classes."[1]

Wife.

The wife, if faithful to her husband, takes [his] wealth; not if she be unfaithful. For it is declared by Kátyáyana:—"The widow should take her husband's wealth, if she be chaste."[2] So says Háríta:—"If a woman becoming a widow in her youth be suspected of incontinence,[3] a maintenance should be given to her for the support of life."[4] Prajápati:—"Dying before her husband, a virtuous wife takes away his consecrated fire; if her husband die (before her) she takes his wealth: this is the ancient law."[5] *Agnihotram* means the [three sacred] fires. The same:—"Having taken all his immoveables and moveables [such as] the base metals,[6] gold, liquids,[7] and clothes, [she] should cause his monthly, half-yearly, and yearly *Śráddha* to be performed. She should propitiate, by funeral oblations or pious liberality, her husband's paternal uncles, his *guru* (or spiritual guide), the daughter's sons, the children of his sisters, and his maternal uncles; also old persons, guests and females [of the family]."[8] *Kupyam*, tin, lead, and the like.

As for this text of Brihaspati:—"Whatever property, whether pledged or of any other kind, [the husband] possessed after division, that the wife shall enjoy after the death of her husband with the exception of immoveable property. The wife, even if virtuous, and if partition have been made, is not worthy of immoveable property."[9] This refers to a wife having no daughter; for [a wife] having a daughter takes even immoveable property as declared in the Smriti Chandriká.[10] The prohibition of sale or other disposition of immoveable property by a widow, without the consent of takers of the heritage, is given on [the authority of] Mádhava. As for the text of Kátyáyana:—"after the death of the husband, the widow preserving [the honor of] the family should obtain the share of her husband so long as she lives; but she has no ownership therein in respect of [its] gift, mortgage, or sale";[11] that is a prohibition of gift of money to the *Bandi* [bards], *Chárana*, and the like [triflers]. Gifts for religious or spiritual objects and mortgage, and the like for

---

[1] Vír. l. 193, p. 1; Kam. and Vya. M. Jímutaváhana (p. 233) comes to the conclusion (p. 240,) that this text should be construed strictly, so as to agree with Brihaspati, and it would then apply to divided as well as undivided families.

[2] Mit. ch. ii., l. 57, p. 1; Vír. l. 195, p. 2; Kam.; Vya. M.

[3] The original is *karkaśá*, which would literally mean headstrong, but from the context it means suspected to be unchaste, and this is the rendering of the Mitákshará; l. 59, p. 1.

[4] Mit. ch. ii., l. 59, p. 1; Vír. l. 198, p. 1.

[5] Vír. l. 193, p. 1.

[6] Zinc, tin, lead, &c.

[7] Oils, ghee, molasses, &c.

[8] Vír. l. 193, p. 2; Vya. M.

[9] Vír. l. 193, p. 2; Kam.

[10] Vír. l. 193, p. 2.

[11] Kam. and Vya. M.

that purpose, are of course permitted; [as is plain] from the aforementioned text [of Prajápati] commencing with *Sthávaram jangamam*, &c.; and from the text of Kátyáyana:—"A widow always engaged in meritorious observances and fasts, constant in the duties of celibacy, intent upon restraining [her passions], and making holy gifts, shall reach the heavenly abodes even if she have no son."[1] As for the text of the same author:—"Heirless property goes to the king after [providing] maintenance for the females and the servants and for funeral charges; but the [heirless] wealth of the *Srotriyá* should be bestowed on [other] Śrotriyás,"[2] and [of] Nárada:—"Except in the case of a Bráhmaṇa, a king, who is attentive to [his] duty, should give something as maintenance to the *strí* (woman) of [the deceased]. Thus is the law of inheritance declared;[3] [both these] have reference to concubines, because the term used is not *Patní* (married wife).

But, says Nárada:—"Among brothers, if any one dies without issue, or enters a religious order, the rest should divide his wealth, except the wife's separate property. They should allow maintenance to his wives to the end of their lives, provided [they] preserve [unsullied] the bed of their lord. If they behave otherwise, the brothers may resume that allowance."[4] It relates according to Madana to the wives of one dying unseparated or re-united; because [the text] occurs under that head. Kátyáyana [says]:—"If her husband have departed for heaven, *stri* (the wife) obtains food and raiment: on the other hand, if unseparated, she will receive a share of the wealth so long as she lives."[5] The term *Avibhakta* (unseparated)* is illustrative of a * ५३ class [such as the] re-united. The word *tu* (but) has here the sense of *vá* (or). There would thus result two [co-ordinate] propositions according to Madana, the latter referring to a wife lawfully married; [and] the former to a concubine. The foundation of this exposition is questionable. The same author [Kátyáyana] thus makes a correct statement [of the law]:—"She who is intent upon her service to the elders[6] of the family, is fit to enjoy her legitimate share: should she not perform her proper duty, raiment and food [only] should be assigned to her."[7] *'Guruh,'* the father-in-law, &c. The meaning is that at his [*i. e.* the elder's] pleasure, she may receive a share, otherwise merely food and raiment.

---

[1] Vír. l. 194, p. 1; Kam. [2] Mit. ch. ii., l. 58, p. 2; and Vya. M.
[3] Mit. ch. ii., l. 58, p. 2; and Vya. M. [4] Vír. l. 195, p. 2; Vya. M. and Kam.
[5] Vír. l. 203, p. 1; and Kam.
[6] The word used is *Guru*, or religious preceptor, but from the context it evidently refers to the elder family members.
[7] Vír. l. 203, p. 2; Kam.

The same:—"A wife who does malicious acts, who is immodest, destroyer of wealth, unchaste, is not fit [to inherit] wealth."[1] As for the text:—"This same course should be followed in the case of degraded females; food and raiment are to be given to them, and they should reside near the house;" it is, in the opinion of some authors, in reference to the husband while living. *Evamvidhim* [means] the treatment accorded to the degraded.

Even to a woman who is [only] suspected of incontinence, a mere maintenance [is to be allowed] according to Hárita, [who says]:—"If a woman becoming a widow in her youth come to be suspected of unchastity, [then] a maintenance merely [enough] to sustain life should be given to her." *Karkaśá*, according to the Mitákshará, means 'suspected of incontinence.' [Mit. ch. ii., l. 59, p. 1.]

Therefore [*i. e.* from the foregoing discussion] it follows that a lawfully married wife [*patní*] having her senses under control, takes the wealth. But if there be more than one, they will divide [it] and take [shares].

Daughter.

In default of her [the wife], the daughter [succeeds]. Therefore [says] Manu [ch. ix., v. 130]:—"The son of man is even as himself, and the daughter is equal to the son. How then can another inherit [his] wealth, but she who stands as if it were himself?"[2] If there be more daughters than one, they should divide the wealth and take shares. Among them also, if some are married and others unmarried, the unmarried alone take by reason of this text of Kátyáyana:—"The widow, if chaste, should take the heritage left by her husband, and in default of her the daughter, [inherits] if unmarried." Among the unmarried, if some are wealthy and others destitute of wealth, the last only shall take; from the [following] text of Gautama:—"*Stridhana* (or a woman's property) goes to her daughters, unmarried and unprovided for."[3] *Apratishṭhitáh* (unprovided for) destitute of wealth. Those acquainted with traditional law hold that the term *strí* (wife) denotes the *pitá* (father) also.

Daughter's sons.

In default of daughters, the daughter's son (succeeds), by this text of Vishṇu:—"If a man leave neither a son, nor a son's son, the daughter's son shall take [his] wealth. For in regard to the obsequies of ancestors, daughter's sons are considered as son's sons."[4]

---

[1] Vír. l. 203, p. 2; Kam. and Vya. M. [2] Vír l. 203, p. 2; and Kam.
[3] Mit. ch. ii., l. 59, p. 2; Vír. l. 205, p. 1; Kam. and Vya. M.
[4] Vír. l. 205, p. 2; Mit. ch. ii., l. 59, p. 2.

In default of the daughter's son, [comes] the father; in default of him, the mother. And Kátyáyana says to the same effect:—"To the sonless, his widow, being a woman of good family, or daughters; or in default of them the father, or mother, or the brother, or [his] sons are declared [to be heirs],"[1] and likewise Vishṇu:—"The wealth of the sonless goes to [his] wife; failing her, it goes to the daughters; failing them (daughters), it goes to the daughter's sons; failing them, it goes to the father; failing him, it goes to the mother; failing her, it goes to the brothers; failing them, it goes to brother's sons; failing them, it goes to *Sakulyas* (or gentiles)."[2] But says Vijñáneśvara [Mit. ch. ii., l. 59, p. 2]:—"Because the word *mátá* (mother) stands first in the sentence, expounding the sense of *pitarau* (parents) [viz. *mátácha pitácha*]; although [from the word by itself] no [definite] order is apparent owing to [it] being an *Ekaśesha* (a grammatical compound formation, where one member is retained and the rest omitted,) which is an exception of the [ordinary] *Dvandva* (copulative compound); because of the [said] order in the [dissolution of the] *Dvandva*, [which order must exist in the dissolution of its exception *Ekaśesha*]; and because the father is common to other sons [such as those by another wife], and not so the mother; therefore the mother first takes wealth [of the deceased son], and failing her the father. This [exposition of Vijñáneśvara] is unsound; because it is opposed to the said texts, [viz., those of Vishṇu and Kátyáyana], and because there is no authority [for saying that the facts] of the mother standing first in the dissolving sentence, and of *Ekaśesha* being an exception of the optional *Dvandva*, and of the commonness and the severalty [of the father and mother respectively] determine the order [of succession].

Father. Mother.

* In default of the mother the uterine brother; in default of * ५३ him, his son. As for the declaration of Vijñáneśvara [Mit. ch. ii., l. 60, p. 1,] and others that in default of uterine brothers, those by different mothers succeed; [and] on failure of them, the sons of uterine brothers; it is not [correct];[3] for, to take the word 'brother' as meaning a uterine brother, in its primary sense and [also] as meaning a brother by a different mother in a secondary sense, is objectionable [as necessitating a] double interpretation [of one word at one and the same time]. In regard to the term *bhrátarah* (brothers)

Brother: his son.

[1] Mit. ch. ii., l. 57, p. 1, where this text is referred to as one of Brihat-Vishṇu. Vír. l. 195, p. 2.

[2] Mit ch. ii., l. 57, p. 1; Vîr. l. 195, p. 2.

[3] Jim. (pp. 295, 296) agrees with Vijnáneśvara in taking the step-brother after the uterine brother; whereas, according to the Mayúkha, he comes with the grandfather as a *Gotraja Sapiṇda*.

that failing brothers, sisters [succeed]; because the word '*brátarah*' [as being] *virúpaikaśesha* (a species of compound where out of two dissimilar members, one only remains) [means] brothers and sisters in accordance with the grammatical rule of Pánini *Bhratṛi-putrau Svasṛi duhitṛibhyám* [the words *bhrátri* (brothers) and *putra* (son) [when compounded] with *Svasṛi* (sister) and *duhitṛi* (daughter) [&c.] [But] it is not [so]; there being no authority for [the word *bhrátarah* being construed as] a *virúpaikśesha* compound. If the sons of brothers have their fathers alive at the time of the death of a paternal uncle, and on this account have no interest in the wealth [of the paternal uncle] they shall take the share of their father by a division with the other paternal uncles, by the analogy of the [rule] in the case of [sharers] with different fathers, the allotment of shares is according to the fathers [*i. e. per stirpes*].

*Gotraja Sapiṇḍá.*

In default of brother's sons [come] the *gotraja Sapiṇḍás*[1] (gentile relations). Among them the first is the paternal grandmother according to the text of Manu [which says, ch. ix., v. 217]:—

Father's mother.

"And the mother also being dead, the father's mother shall take the heritage."[2] Although she is (here) mentioned immediately next to the mother, she is to be entered at the end after the brother's sons, after the manner of the entry of intruders who are placed at the end, because she is not mentioned among those whose order [of succession] is fixed ending with brother's sons.

Sister.

In default of her [comes] the sister; for, says Manu [ch. ix., v. 187]:—"The wealth [of the deceased] goes to whoever is next among *Sapiṇḍás* and the rest."[3] [Similarly] Bṛihaspati:—"Where a childless man [leaves] several clansmen, *Sakulyas* (kinsmen) and *Bándhavás* [relations], whoever of them is the nearest takes the wealth [of the deceased]."[4] Being begotten in her brother's family *(gotra)*, she possesses the qualifications of a *gotraja*.[5] The community of *gotra* [does] indeed not [exist in the case of a sister].[6] But the quality of being a *Sagotra* is not mentioned here as being a condition of [the right of] taking the wealth [as heritage].

Paternal grandfather, &c.

In default of her, the paternal grandfather and the half-brother take in [equal] shares, because their propinquity is equal, [the former being]

[1] Gentiles within the seventh degree being connected by funeral oblations.
[2] Mit. ch. ii., l. 60, p. 1; Vír. l. 195, p. 2.
[3] Mit. ch. ii., l. 60, p. 1; Vír. l. 208, p. 1.
[4] Vír. l. 208, p. 1; and Kam.
[5] *Gotraja, i. e.* born in the *Gotra* or family.
[6] Because by marriage her *Gotra* changes into that of her husband.

the father of the father, [and the latter] a son of the father [of the deceased]. In other cases too, where propinquity is equal, and there is nothing specific [to indicate preference] such as the given order [in any text] and the like, the same [rule holds]. Therefore, in default of them [*i. e.* the paternal grandfather and a half-brother], the paternal great-grandfather, the father's brother, and the sons of the half-brother should divide and take [in equal shares].

*Sapiṇḍas* and *Samánodakas.*

All the *Sapiṇḍas* and the *samánodakas* [follow] in the order of propinquity. Manu thus mentions them [ch. v., v. 60]:—"The *Sapiṇḍá* relationship ceases with the seventh person [in the line], and that of *Samánodakas* (*i. e.* those connected by an oblation of water) ends when births and names are no longer known."[1] *Saptamé* means the seventh [in the line] being included.

Bandhus.

In default of *Samánodakas* [come] the *Bandhus* [cognate kindred]. They [are thus specified] in another *Smṛiti*:—"The sons of one's own father's sister, the sons of one's own mother's sister, and the sons of one's own mother's brother, are to be reckoned as *Átmabandhus* (one's cognate relations). The sons of the paternal grandfather's sister, the sons of the father's mother's sisters, and the sons of the father's mother's brothers, are known as the *Pitṛibandhus* (one's father's cognate kindred). The sons of one's mother's father's father's sisters, the sons of one's mother's mother's sisters, and the sons of the mother's mother's brothers, are known as *mátṛibandhus* (one's mother's cognate kindred)."[2] Here [*i. e.* among these] the order [of succession] is that stated [in the text].[3]

[If it be said]: "As the right of the wife and all the rest to inheritance is derived from their relation to the deceased,* so let [the
*५५ right] of the Bándhavas be; what title then can the *Bhándhavas* of the father or of the mother [of the deceased] have to the wealth? [The texts] beginning with *pituh pitṛi shwasu putrah*, &c. (The sons of the sister of the father's father, &c.) are only as [denotative of a class]

[1] Mit. ch. ii., l. 60, p. 1; Vír. l. 209, p. 2; Kam. and Vya. M. All these works quote this verse with the fourth quarter as निवर्तेताच्चतुर्दशात् (ends with the fourteenth [ancestor or descendant]) so as to make the extent of *samánodakaship* definite. It must be noted, however, that the Vyavahára Mádhava and Kamalákara refer it to Brahat-Manu and *Vradha Manu* respectively. The reading which has been adopted by the three editions of Manu consulted by me, as well as by Kullúka, and accepted by Nílakaṇṭha, is जन्मनाम्नोरवेदने (when births and names are no longer known).

[2] Mit ch. ii., l. 60, p. 1; Vír. l. 209, p. 2; Kam. The Vyavahára Mádhava attributes these verses to Bandhāyana.

[3] This applies to the three classes, as well as to the several members of those three classes.

showing the connexion between a term and the objects denoted [by it], [and have] no reference to wealth." The answer [to that] is that the showing the connection between terms and objects denoted [by them] is redundant; because, even without the said text, the word [viz., *Bándhava*] in its primary sense would apply to [those enumerated as] the father's and mother's cognate relations, in the same way [as it does] to the maternal uncle of the father, the paternal uncle of the father, and the like. Hence the text is intelligible only by the acceptation of [the enumerated] paternal and maternal *Bandhus* (cognates) as being *Bandhus* in reference to succession to property. In short, the same [reasoning] applies in regard to the rules for mourning and the like in reference to *Bandhus*.

In default of *bandhus* [cognate kindred], the *áchárya* (preceptor); on failure of him, the pupil, according to the text of Ápastamba [which says]:—"Failing male issue, the nearest *Sapiṇda* inherits; in default of him, the preceptor; in default of him, the pupil.[1]

Preceptor.

Pupil.

In default of him (the pupil), a fellow-student; in default of him, a Śrotriya (a Bráhmaṇa learned in the Vedas); for, says Gautama:—"The *Śrotriyas* should take heritage left by childless Bráhmaṇas.[2]

Fellow-Student.

Śrotriya.

In default of one such, any other Bráhmaṇa, in accordance with Kátyáyana:—"But in default of all these, the lawful heirs are such Bráhmaṇas as have read the three Vedas, and are pure, and who have subdued their passions. By [doing] this, justice is not violated."[3] And Nárada [to the same effect]:—"In every case, the king may take heirless wealth except the property of a Bráhmaṇa: for the property of a Bráhmaṇa [left] without an heir should be given to *Śrotriyas*."[4] Brihaspati:—"If Kśatriyas, Vaiśyás and Śúdras die without leaving male issue, [and] leaving neither wife nor brother, the king should take their wealth, for he is the lord of all."

Bráhmaṇas.

Heirless wealth.

Yájñavalkya [ch. ii., v. 137] states a distinction with regard to the wealth of ascetics and the like. [The heirs] who take the wealth of a *vánaprastha* (a hermit), of a *yati* (an ascetic), and a *Brahmachárí* (a student), are in their order, the preceptor, the virtuous pupil, and one who

Ascetics.

[1] Mit. ch. ii., l 60, p. 2; Vír. l. 209, p. 2; Vya M. and. Kam. [2] Id.

[3] Mit. ch. ii., l. 60, p. 2; Vír. l. 209, p. 2.; Kam. and Vya. M. All these works refer this text to Manu.

[4] Kam., where this text is referred to Devala.

is a supposed brother, and belonging to the same order.[1] The *Bramachárí* stands for a Naiṣṭhika one (one who remains a student through life without marrying); for [in the case] of an *Uparkurváṇa* (a temporary student), the father and the rest are [the natural heirs]. *Dharmabhrátá*, one accepted as brother. *Ekatírthí*, one belonging to the same *Áśrama* [order]. The compound *dharmabhrátrékatírthí* is a *Karmadháraya* (appositional) compound, [meaning] one who is a supposed brother, and belongs to the same order. According to Vijñáneśvara [Mit. ch. ii., l. 60, p. 2] :—"The order in which the *Ácháry*a and the rest [succeed] to a *Vánaprastha*, and the rest is inverse to the order stated in the text." [But according to] Madanâ it is direct in accordance with the [following] text of Vishnu :—"The spiritual preceptor, or the pupil, shall take the wealth of a [deceased] *Vanastha* (*i e. vánaprastha.*)"[2]

The funeral rites of the deceased as far as the tenth day inclusive, should be performed by whoever takes his wealth, including the king himself. And Vishṇu says the same :—"He who takes the wealth, is declared [to be] the giver of the *Piṇḍa* or funeral oblations."[3] This [subject] has been fully explained by me in the "Śráddha Mayúkha" in determining [the order of those] qualified to *perform* [Śraddhas].

## THE UNION AFTER PARTITION.

Re-union.

Now begins the investigation of who are *Sansṛishṭi* (re-united co-parceners). In this connexion Bṛihaspati [thus] defines re-union: "He who being once separated, dwells again through affection with his father, brother, or paternal uncle, is said to be re-united with him." This re-union according to the Mitákshará [ch. ii., l. 61, p. 1] and others [can only take place] with a father, brother, or paternal uncle, [and] not with others, because no others are mentioned in the text.* Properly speaking [the state of] re-union [should be] co-extensive with the makers of partition. As for the word, father, &c., they are simply illustrative of the makers of partition, just as the term [*Vedi* (altar) is made to mean the future site of *Vedi* in the sentence] "[The sacrificial part] lies half within and half without the altar." Otherwise there would be a splitting up [of the text] into [several] sentences. Hence re-union may take place even with a wife, a paternal grandfather, a brother's grandson, a paternal uncle's son, and the rest. In accordance with the [rule of] *Sámánádhikaranya* (the rule that the subject and the predicate should inhere in the same object) [observable]

* ५६

[1] Vír. l. 210, p. 1; Kam. and Vya. M. [2] Vír. l. 210, p. 1; Jim. p. 338.
[3] Kam.

in the text:—" He who having been separated, again dwells together, is *Sansṛishṭa* (re-united), [there can be] no re-union between the sons and the like of two separated brothers, [&c.] Re-union [implies] an understanding or wish that [their] present, or future wealth [shall be] common until a fresh partition."

In connexion with this subject, Manu states a distinction with regard to a fresh partition among the re-united [ch. ix., v. 210]:—" If re-united [co-parceners] make a fresh partition, the shares must be equal. The right of the [law of] primogeniture does not there apply."[1] Here some[2] say that the unequal distribution being [already] prohibited by [the expression], *'the shares must be equal,'* [the fact] of a prohibition [of the same] again by a disallowance of [the right of] primogeniture, shews that inequality will not be [allowed] only on account of primogeniture; but that inequality in partition, owing to the inequality of wealth [amalgamated] at the time of re-union, is [permitted]. But, as [the clause] beginning with *'Jyaishṭhyam'* is simply an *arthaváda* (explanatory), the shares will be equal in spite of the inequality of wealth. And usage [tells] the same. Therefore, while [it is] possible to [explain] this text in conformity to usage, it is improper to suppose a text opposed to that [usage]. Again, some say that the *Vyavahára Śastra* (rules of civil judicature) is, like grammar, generally based on usage. Bṛihaspati:—" If any one of the re-united [parceners] acquires wealth by science, valour, or the like, two shares of it must be given him, and the rest shall have equal shares.[3] Madana [says that] inasmuch as two shares [to the acquirer] are established by [the text] *Arjakasya dvau Bhagau* (two shares to the acquirer), the [present] text should [be made to] mean that in a partition among co-parceners not re-united, two shares [are allowed] in the case of an acquisition without detriment to the paternal wealth; but in a partition among re-united co-parceners, two shares [are allowed] even if the acquisition was at the expense of the re-united property.

Order of succession.

Yájñavalkya [ch. ii., v. 138] enumerates those entitled to take the wealth of [one] re-united. "A re-united coheir [takes the wealth] of a re-united coheir, [and] a uterine brother, [that] of a uterine brother."[4] This [text] is an exception to the [text] beginning with *Patní Duhitarah* (the wife, the daughters, &c.) Hence the meaning is,—it is not the

[1] Mit. ch. ii., l. 61, p. 2; Vír. l. 210, p. 1; and Vya. M. All these works as well as the edition of Manu, upon which my references to that work are based, read विभक्ताः (separated) instead of संसृष्टाः (re-united) in the first quarter of the verse.

[2] Nílakaṇṭha here refers to Kamalákar and Vyavahára Mádhava. The Víramitrodaya would also favor this interpretation (see l. 210, p. 2.)

[3] Vir. l. 210, p. 2; and Vya. M.

[4] Vír. l. 210, p. 2; Kam. and Vya M.

being a wife, &c. but the being a re-united [parcener] that determines the right of taking the wealth of a [re-united parcener].

As for [the opinion of] Vijñaneśvara [Mit. ch. ii., l. 61, p. 1], Madana and others, [that] "this [text] too applies to one devoid of son, grandson, or great-grandson because [of] the dictum that the scope of an exception should be the same as [that of] the rule, and because the terms *Aputrasya* (of one sonless), and *Svaryátasya* (of one gone to heaven) from the aforementioned [text] run into the [present text]; so that a re-united [parcener] alone will take the wealth of one such [*i. e.* sonless] dying, in spite of [coheirs] beginning with wife, who [though] nearer [are] not re-united." This is questionable. For, there is no authority for [supplying] a complement [from a preceding passage], where it can be dispensed with. As for the sameness of scope, [that] need not exist in every respect; but [may exist] so far as practicable, and [the same or partial coincidence exists in the present case by both the rule and the exception] referring to a *Sapiṇḍa* of the deceased.

If [it be said] that the term *Aputrasya* (of a sonless) not being [allowed to be] understood, the term *Svaryátasya* (of one gone to heaven) will [similarly] not be understood, and there will be no [term meaning] deceased, [so as to show that the text refers to a deceased,] then [it is] not [so]; because that [term, viz., one meaning deceased] can be got [*i. e.* understood or supplied] from the text of Manu, to be hereafter quoted, [containing the words] *hiyetánśa pradánatahmriyetányatarovápi* (will be excluded from a share; or if any of them dies, &c.) By [that term, viz., *Aputrasya*] being understood, [on the other hand] between two sons, or a son and a grandson, one being re-united and the other not re-united, equal shares will have to be given, inasmuch as that text will [then] not apply to one with issue. This is opposed to usage which is the source of authority in law. If [again] it be said that owing to [that term] not being understood, the text will apply even to one with male issue, and therefore between a *putra* (male issue) not re-united and a re-united brother or the like, the brother or the like alone will get [the wealth] and not the son or the like, then [it is] not [so]; because [this objection] is refuted in the comment on the latter hemistich [of the text].

An exception to the rule [laid down] in this *quarter is mentioned [by] *Sodarasya*, &c. (of a whole brother, &c.) [Here the terms] *Sansṛishṭinah* [and] *Sansṛishṭi* (of one re-united, and one re-united,) are supplied [from the preceding quarter]. The meaning is that between a whole and a half brother [both] re-united, the re-united whole brother alone will take the wealth of the re-united [brother] deceased. The latter hemistich [Yájñavalkya ch. ii., v. 138,

is as follows]:—" [The re-united brother] shall give up the wealth of the deceased to one born [of his body], or [failing one such] shall retain it."[1] The sense of it is: If the pregnancy of the wife of a deceased re-united co-parcener be unascertained at the time of dividing his wealth, and a son be afterwards born, the re-united father's brother, or the like parcener, should give the wealth to that [son]; and failing him, should take it himself. Here the filial relation alone determines the right of taking the father's wealth, [and] not the fact of birth after partition; because [such a supposition] serves no purpose, [necessitates] superfluity, and would disqualify from share one born before partition in a different country but unknown [on that account]. Therefore, to the son previously born, even though not re-united, a father's brother or the like, though re-united, must give his inheritance.

The same (Yájñavalkya ch. ii., v. 139) propounds the right of a uterine brother not re-united and of a half-brother re-united to take wealth in [equal] shares:—" One born of a different mother, if re-united, may take the wealth; but one born of a different mother, and not re-united, [cannot take]; but a uterine brother, if even not re-united, should obtain the wealth, and one born of a different mother, even if re-united, shall not take alone."[2] Here by the expression, born of a different mother and the like, the half-brother alone is not designated, but the paternal uncle and the rest likewise; because there is nothing in those terms to distinguish between them. Otherwise, we should have the absurdity of expounding re-union with father's brothers and the rest. Because there is no other object in re-union.

The words "if not re-united," apply to both, to the preceding and the following clauses, like the lamp upon the threshold.[3] So the word *sansṛishṭa* (re-united) is to be repeated, and one is to be understood as meaning one re-united as to the wealth, and the other as one connected by birth from the same womb. [In the third clause] the word *api* (though) is to be repeated, [in the fourth] after the word [re-united in wealth]. The word *eva* (alone) is to be supplied at the end of the verse. Hence these are the meanings of the different clauses of the [above] text:—[1] *Anyodaríyah* [that is] one born of a different mother, viz., the wife, the father, the father's father, the half-brother, the paternal uncle, &c. If they be re-united, should take the wealth. [2] Those from a different womb, if not re-united, [should] not [take the wealth]. Here the re-union and birth from a different mother, standing together, are a cause, of which the capacity to inherit [is the effect], and *vicé-versâ*. [3] The uterine

[1] Vír. I, 210, p. 2; Kam. and Vya. M. [2] Vír. I, 211, p. 1, Kam. and Vya. M.
[3] Which gives light both within and without.

brother, though not re-united [by wealth], should take the property. By this reasoning, the being a uterine brother alone is even declared a sufficient reason [for taking heritage]. [4] Therefore, the *sansṛishṭa* or one re-united only by wealth, if born of a different mother, will not alone take the whole.

Therefore it follows from the above, that if one is *sansṛishṭah* by reunion of wealth, and another is connected as one proceeding from the same womb, they should both divide and take the wealth [between them]. Manu [ch. ix., vv. 211, 212] clears this point [in his work] when treating of the capacity of the re-united [to inherit]:—"Should the eldest or youngest of several brothers be deprived of his share [at the distribution], or should any one of them die, his share shall not be lost [211]; but the uterine brothers and sisters, and such as were re-united after a separation, shall assemble together and divide his share equally."[1] *Hiyeta* (be deprived of), by entering another order, by degradation from sin, or the like. The term *Sodariyah* (uterine) goes along with the word *Bhrataráh* (brothers). *Yecha sasṛishṭáh* (and such as were re-united), that is the wife, the father, the paternal grandfather, the half-brother, the paternal uncle, and the rest [as were re-united].

On this point, *Prajápati* states a distinction:—"Whatever concealable wealth [exists], becomes the property of the reunited [parceners]; but land and houses those not re-united should take according to their shares."[2] *Antardhanam* (concealable wealth), what is capable of being hidden by depositing under ground, or otherwise [such] as gold, silver, &c. *Sansṛishṭah* [that is] of a different womb should take; but land the uterine brother [should take]. Kine, horses, and the like should be taken by the uterine and those of different wombs. According to Madana, a brother of a different womb if re-united should even take kine, horses, and the like. But this cannot be founded on the above text. It is said in the Smriti Chandriká:—"But if there exist only one species of property [out of two that is] (1) concealable wealth, [and] (2) land, kine, &c. the uterine brother alone should take even if not re-united. The authority for this is questionable. Among uterine brothers, if some are re-united, and others not re-united, the re-united alone should take [the wealth] because two causes co-exist, the being born of the same womb, and reunion. Hence, Gautama:—"When a re-united [parcener] dies, his re-united [parcener] shares the heritage."[3] Bṛihaspati:*—"Two brothers who become reunited through affection, become the partakers of each other."

This, then, is substantially the sense of the above:—As one whether re-united with his father or not re-united, should take the entire

[1] Mit. ch. ii., l. 61, p. 2; Vír. l. 211, p. 1; Kam. and Vya. M.
[2] Vír. l. 212, p. 1; Kam. and Vya. M. [3] Vya. M.

share of his father; because it is the filial relation which determines the son's right to take the [father's] share. Among (several) sons also, when one is re-united and the other is not, the re-united one alone [should take] by the text, "Of a re-united [co-parcener], the re-united co-parcener [shall take]." In a case of re-union between a father, a son, and any other [co-parcener] not a son, the son alone [should take], because it has been already declared by the terms, "he shall either give up to [the posthumous son], or shall receive the share." If there be [many re-united] other than sons, [such as] parents, brothers, paternal uncles, and others, the parents alone [should take]. Among them again, the mother first, and then the father, according to Madana. As for the brothers, paternal uncle, and the rest, they should even divide and take; for among them all, the state of re-union equally exists, as the efficient cause whence their right of taking the wealth is derived. So likewise in an assemblage of unre-united brothers, and re-united paternal uncles, half-brothers, and others, they should divide [and take it], because of the texts:—"A uterine brother, even if not re-united, should obtain the wealth, and not [exclusively] one born of a different mother;" and "Of a re-united [co-parcener], a re-united [co-parcener]; and of a uterine brother, the uterine brother." If there be the re-united wife alone, she alone should take, from the [same] text, "Of a re-united [co-parcener], a re-united [co-parcener]."

If there be an assemblage of other re-united persons together with her [the wife], they alone [should take], and not she. In like manner, Śankha and Nárada, in treating of the subject of re-union, observe:—"Among brothers, if any one die without issue, or enter a religious order, the rest of the brothers should divide his wealth, except the *Stridhana* (the wife's separate wealth). They should provide his wives with maintenance for life; provided these preserve [unsullied] the bed of their lord; but if [they behave] otherwise, they should cut off [that allowance]."

She, who is his daughter, is enjoined to be provided with maintenance out of her father's share, which [she] takes till [performance of] her [marriage] ceremony, after which the husband is to support [her]. Here, as in the sacrifice, he who offers the [rice] for sacrifice, must, if the moon rise, [before the close of the sacrifice,] divide the rice into three parts, the sacrificial substance and the rise of the moon [being mentioned], the [use of the word] sacrificial substance is enough for its determination in the sacrifice, the word *nirvápa* or division, need not have been mentioned; so from the order of succession [above given], in the division of property of the re-united, either after death or entry into an ascetic order, the makers of the re-union being determined, the word brother is used [simply as] illustrative of a class.

Although Sankha in the section [entitled] re-union [observes]:—"The wealth of him who goes to heaven leaving no male issue, goes to the brothers; failing them the parents should take it, or the eldest wife;"[1] still according to Madana, that is intended to fix the order of the unre-united brothers and the rest, upon the death of one dying re-united, subsequent to the death of his paternal uncle, brother's son, or half-brother with whom he had previously made a re-union. And in this case, according to the same authority, the first is the mother and afterwards the father.[2] The *eldest* [wife] who has kept her senses under restraint. In default of the wife the sister. And Bṛihaspati says [to the same effect]:—"[Of the wealth] of him who has gone [to heaven], childless, and [leaving] neither wife nor parents, the sister is then entitled to take a share."[3] Some declare of him who has gone [to heaven], the daughter [takes]. In default both of daughter and sister, the nearest *sapiṇḍa* [succeeds].

*N. B.*—Śṛikrishṇa-Tárkálankára, the commentator on the Dáyabhága of Jímúta-váhana, thus summarizes the law of succession to a deceased male, as prevailing in Bengal:—

"Here the order of succession to the wealth of a deceased male [is as follows]:—The first [among the heirs] is the son; failing him, the son's son; failing him the son's son's son. The grandson whose father is dead, and the great-grandson whose father and the grandfather are dead [succeed] simultaneously. In default of [any one] up to the great-grandson, the wife [succeeds] who, having obtained the heritage from her husband, shall associate herself with her husband's, or in default her father's family, and leading a virtuous life enjoy the husband's heritage for the support of life; and who likewise might make some gifts for the benefit of her [deceased] husband, but shall not enjoy it at her pleasure as [though it were] *stridhena* (woman's wealth). Failing her, the daughter; among [daughters]; first the maiden; failing her, the betrothed; and failing her, the married, of whom [the daughter] with a male issue, and one who is capable of having male issue succeed together; while the barren, or the widowed [daughter] without a male issue are excluded. In the absence of a married [daughter] the daughter's son; failing him the father; failing him the mother; failing her the brother. [Of brothers] the uterine [brother] first [succeeds]; failing him the [brother] born of a different mother. Where the deceased has [some] brothers reunited, when all [the brothers] are uterine, the uterine re-united [brother] first [succeeds]; and failing him, the unre-united uterine [brother], and similarly when all [the brothers] are step-brothers, the re-united step brother first succeeds, and in his absence the unre-united step-brother. Where the step-brother is re-united and the uterine brother not re-united, both of them are equal sharers. In default of brothers, the brother's son [succeeds]. There too, the son of the uterine brother first [succeeds]; failing him, the son of the step-brother. In the case of reunion, when all are sons of uterine brothers, the son of the re-united uterine brother first [succeeds]; and in his default, the son of the unre-united uterine brother; [and] when all are sons of step-brothers, the son of the re-united step-brother first [succeeds]; and failing him, the son of the unre-united step-brother. When, however, the son of the uterine brother is re-united, and the son of the step-brother not re-united, both [of them] are equal sharers as [in the case of] brothers. In the absence of a brother's son, the brother's son's son

[1] Mit. ch. ii., l. 59, p. 1; Vír. l. 213, p. 1; Vya. M.; Kam. [2] Jim. p. 343.
[3] Vya. M.; Kam.; Vír. l. 213, p. 2.

[succeeds]. There too, [the facts of] the brother being uterine or not uterine, and [being] re-united or not re-united, should be considered for [determining] the order [of succession]. Failing him [*i. e.* the brother's son's son], the father's daughter's son [succeeds] [if he be] son of the uterine sister. Failing him, the son of the son of the step-sister. Failing him, the uterine brother of the father; failing him the father's step-brother [succeed]. Failing him, the son of the uterine [brother] of the father, the son of the father's step-brother, the father's uterine brother's son's son, [and] the father's step brother's son's son, succeed in order. Failing them the father's father's daughter's son [succeeds], [first if] a son of the father's uterine sister, [and next] if a son of the father's step-sister. This [rule applies] in the case of [the succession of] the great-grandfather's daughter's son, to be hereafter spoken of. Failing him, the father's father; failing him, the father's mother; failing her, the uterine brothers and step-brothers of the father's father; their sons; their son's sons; [and] the father's father's father's daughter's sons succeed in order. In the absence of persons hitherto mentioned, who may be the givers of the Piṇḍa (rice oblation) to be given to the [deceased] owner of wealth, the mother's brother, and the rest, who may be givers of the Piṇḍa, which the [deceased] owner of wealth could [himself] have given, succeed. Failing them the mother's sister's son of the [deceased] owner of wealth. Failing him, the sons and the son's sons of the mother's brother succeed in order. Failing them, the three descendants beginning with the son's son's son's son succeed in order, [as being] the lower *sakulyas*, [and] the givers of the *lepa* (wiping of the hands touching the rice oblation) to be enjoyed by the [deceased] owner of wealth. Failing them, the father's father's father's father, and the like, and their issue succeed according to their propinquity [as being] the higher *sakulyas*, and the givers of the *lepa* which the [deceased] owner of wealth could [himself] give. Failing them, the *samánodakas* succeed. Failing them, the preceptor; failing him, the pupil; [and] failing him, the *Brahmachári*, who is a fellow-student of the Vedas [succeed]. Failing them, the co-villagers, those having the same *gotra*, and those having the same *pravara* (illustrious ancestors) succeed in order. In the absence of all the heirs hitherto mentioned, the king shall take [the wealth] save that of a Bráhmaṇa. The wealth of a [deceased] Bráhmaṇa is taken by Bráhmaṇas possessing a knowledge of the Vedas, and such [other qualities]. Similarly, the wealth of a *Vánaprastha* shall be taken by another *Vánaprastha*, who was treated as a brother, and who was a fellow-student. Similarly, a worthy pupil shall take the wealth of a *Yati* (one who has entered the fourth order), the preceptor [that] of a *Naishṭhika-Brahmachári* (a perpetual student); and the father, or the like, that of an *Upakurváṇa Brahmachári* (a temporary student). This is the concise statement [of the order of succession].

## *STRÍDHANA* (A WOMAN'S PROPERTY).

Stridhana.

Manu [ch. ix., v. 194]:—"What is given before the nuptial fire (*Adhyágni*), what is presented in the bridal procession (*Adhyávahanikam*), what is given in token of love (*Prítidattam*), and what is received [by a woman], from her brother, mother, or father are declared six-fold peculiar property of a woman.[1] [The word] *shaṭ* (six) is here used as exceptive of a less number. This [interpretation] harmonizes with the [use of the] word '*Ádya*' in a text of Yájñavalkya [which says] [ch. ii., v. 143]:—"What was given [to a woman] by the father, the mother, the husband, or a brother; or received [by her] at the nuptial fire, or *Adhivedanikam*

[1] Mit. ch. ii., l. 62, p. 2; Vír. l. 214, p. 1; Kam. and Vya. M.

(presented on her supersession) and the like is denominated a woman's property."[1] And Vishṇu specifies more [than six kinds] :—"What was given [to a woman] by [her] father, mother, son or brother; *adhyagni* (what was received before the [nuptial] fire); *adhivedanikam* (what was presented [to her] on [her] husband's espousal of another wife); *Sulka* (her own perquisite); *bandhudattam*[2] what was given to her by her cognate kindred; and *Anvádheyaka* (a gift subsequent) [are a woman's property]."[3]

Kátyáyana thus defines the *adhyagni* and other (species of a woman's separate property) :—"What is given to women at the time of marriage near the nuptial fire is celebrated by the wise as *Adhyagni*, or a woman's property bestowed before the nuptial fire. That again which a woman receives whilst she is being conducted from her father's[4] home is termed the *Adhyávahanikam* [kind of] *stṛídhana* (woman's property); whatever is given to [a woman] through affection, by her mother-in-law or her father-in-law, and [wealth termed] *Pádavandanikam*, or what is received on a woman's saluting the feet of elders, is termed *Prítidatta*; what is obtained by a woman subsequently to her marriage from the family of her husband, or what is similarly obtained from her own family, is called *anvádheyam*; whatever is obtained [by a woman] as the equivalent of household utensils, of beasts of burden, of milch cattle, or ornaments, is declared [to be] *śulka*."[5] The meaning is when the household utensils and the rest are not available, what is given to the bride at the time of her being given [in marriage] as the price of them is *śulka*. Yájñavalkya [thus] explains the *ádhivedanika* [ch. ii., v. 148] :—"To a superseded wife [the husband] should give a sum equal [to the expenses of the marriage] by which she has been superseded, provided no *strídhana* (woman's property) has been bestowed on her";[6] but if [any has been] assigned, *Ardham* or a half [only] should be allotted. *Ardham* means as much as will make [her *strídhana*] equal to the expenses of the [husband's] second marriage.

Devala :—"That which a husband has promised as *strídhana* (woman's

---

[1] Vír. l. 214, p. 1; Kam. and Vya M.

[2] Jímútaváhana states (p. 117) this *bandhu* to be the bride's mother's brother; and usage shows that this is still the custom; for the maternal uncle has a part assigned to him at and before the sacrifice.

[3] Vír. l. 214, p. 1.

[4] Jímútaváhana (p. 119) distinctly makes this to be a gift by any member of the father's family.

[5] Mit ch. ii., l. 62, p. 2; Vír. l. 214, p. 2; Kam.; Vya. M.; Vijñáneśvara makes *Śulka* to be that which being paid the daughter is given in marriage; Madana in Víramitrodaya says that what is received from the husband in the shape of household utensils, &c. is *śulka*.

[6] Vír. l. 215, p. 1; Kam and Vya. M.

property) should be made good by his sons even as a debt."[1] *Pratiśrutam* (promised) (*i. e.*) to his wife.

On the subject of giving property to women, Kátyáyana states a distinction:—"[Separate] property excepting immoveables may be given to women by the father, mother, husband, brother, and kindred according to their means as far as two thousand."[2] According to Madana, wealth to the extent of two thousand *paṇas* excluding immoveable property are to be given.

So also Vyása:—"A present amounting to two thousand at the most* may be given to a woman out of the wealth."[3] Here this 10
* ६० gift up to two thousand is meant [to be for] every year. [For] the same [author states that] in [a period of] many years more than this, and in case of ability even immoveable property may be given.

Stridhana, technically so called.

In property given to a woman in fraud of heirs as well as in ornaments and the like given to her merely for wearing, a woman has no ownership according to Kátyáyana [who says]:—"But what was given to women with a fraudulent intent or for a particular object by their father, brothers, or husband is not denominated *stridhana*."[4] In [property] earned by mechanical arts, or even obtained from friends or the like, 20 other than the father and the rest, women have no ownership, according to the same author. "In whatever is earned by mechanical arts or received through affection from any other [than the relations already mentioned,] the husband has property, but the rest is pronounced [to be] *stridhana* (woman's property). As for the text—"A wife, a son, and a slave are all incapable of property. Whatever they earn, belongs to him to whom they belong,"[5] that too has reference to wealth acquired by mechanical arts and the like. It is also proper [to interpret the text as shewing] the absence of absolute dominion even in the *ádhivedanika* or other [species of *stridhana*]. Hence, says 30 Manu [ch. ix., v. 199]:—"a woman should never make [any] expenditure out of the family [property] belonging to several or even [out of] her own wealth without the assent of her husband."[6] *Nirhárah* [means] expenditure.

In a certain [kind of] property, Kátyáyana declares [their] absolute dominion. "That which is obtained by a married woman, or by a virgin in the house of her husband, or of her father, from her brother,

---

[1] Vír. l. 216, p. 1.
[2] Vír, l. 215, p. 1; Vya. M.
[3] Vír. l. 215, p. 1; and Kam.
[4] Vír. l. 214, p. 2; and Vya. M.
[5] Vír. l. 214, p. 2. Nílakaṇṭha reads the second half of this text *Nirdhanáh sarva* 40 *evate*, while the Víramitrodaya gives it as *trayaevá dhanáh smṛitáh*; the latter means these three are declared to be without wealth, *i. e.* incapable of owning anything.
[6] Vír. l. 215, p. 1.

or her parents, is termed *Saudáyika*. The independence of women who have received the *Saudáyika* wealth, is desirable [in regard to it], for it was given [by their kindred] for their maintenance out of affection. The power of women over *Saudáyika* at all times is celebrated both in respect of gift and sale, according to their pleasure, even in [the case of] immoveables."[1] But over immoveable property given by the husband they [have] no absolute dominion according to the text of Nárada [which says]:—"What was given by an affectionate husband to his wife she may enjoy as she pleases even when he is dead, or may give it away excepting immoveable property."[2]

The non-existence of dominion in the husband and others over *stridhana* (woman's property) is declared by the same [author]:—"Neither the husband, nor the son, nor the father, nor the brothers, have authority over *stridhana* (a woman's property) to take it or to give it away. If any of these persons by force consume the woman's property, he shall be compelled to make it good with interest, and shall also incur a fine." "If [such person], having obtained her consent, use the same amicably, he shall [be required to] pay the principal only when he becomes able."[3] Manu [ch. viii., v. 29, and chap. ix., v. 200]:—"Such kinsmen as seize upon the wealth of women whilst they are alive, a just king should chastise with the punishment [due to] thieves." "The heirs of the husband shall not divide among themselves any ornament worn by a woman during the lifetime of her husband; they who do so, are degraded from their tribe."[4] *Dhṛita* (worn) [means] that which was given by her husband or the like, and which she wore. Devala:—"[A woman's] maintenance, ornaments, *Śulka* (perquisite), and gain, are her *stridhana*. She herself has the enjoyment of it: her husband is not entitled to it when not in distress. In the case of (its) idle expenditure or consumption, [the husband] should repay it with interest; [but] he may use the property of his wife to relieve the distress of a son."[5] *Vṛitti* [means] wealth given by the father or the like for subsistence. *Labhah*, interest [or profit]. *Mokshah* expenditure, in other words, gift or other [alienation].* The term *putra* (son) is illustrative of the family. Yájñyavalkya [ch. ii., v. 147]:—"A husband is not liable, unless he is willing, to make good the property of his wife taken [by him] in a famine or for the performance of religious duties, or during illness, or while under restraint."[6] Here by the [specific] mention of [the word] *bhartṛi* (husband) it is virtually declared that *stridhana* is not to be taken

* ६१

[1] Mit. ch. ii., l. 62, p. 2; Vír. l. 215, p. 1; Vya. M. and Kam.
[2] Mit. ch. ii., l. 47, p. 1; Vír. l. 215, p. 2; Vya. M. and Kam.
[3] Vír. l. 215, p. 2; Vya. M. and Kam.
[4] Mit. ch. ii., l. 64, p. 1; and Kam.
[5] Vír. l. 215, p. 2; and Kam.
[6] Vír. l. 216, p. 1; and Kam.

by any other but himself, even when distressed by famine or by any other calamity. *Dharmakâryam* (religious duties), that is, such [alone] as are indispensable. *Sampratirodhaké* [means] in confinement.

In some cases a husband must restore it even if unwilling, as said by Devala:—"Now if the husband have two wives, and do not show honour to one [of them], he shall be compelled by force to restore to her [*i. e.* the latter], even [what she may have] voluntarily given to him. Where food, raiment and dwelling are withheld from a woman, she may exact her own (property) and a share from coheirs."[1] *Rikthinah* [means] from a coheir. This, however, refers to a virtuous wife; for, a wicked one deserves no share. And the same [author observes]:—"A wife who does injurious acts, who is immodest, who wastes his property, or who is given to adultery, is not fit [to have] her *stridhana*." The same [author]:—"Wealth was produced for [the performance of] sacrifices; therefore it should be spent on religious objects, and not on women, fools, or irreligious persons."[2]

Manu thus declares the right of succession, after a woman's decease, to the *anvádheya* [species of *stridhana*] [ch. ix. v. 195]:—"The *anvádheya*, and that wealth which was given through affection by the husband, shall be inherited by her children [even] if her husband be alive."[3] The same author further explains the term *prajá* (children) [ch. ix. v. 192]:—"On the death of the mother, all the uterine brothers as well as all the uterine sisters, equally divide the maternal wealth."[4] The comment of the Mitákshará [here] is [that] the companionship [in the act of division] is to be among sons, where the right [to succession] has accrued to them by the non-existence of daughters and the like; and among daughters where the [said] right accrues to them alone, the association of daughters and sons which follows from no rule is [not meant to be] laid down.[5] Others [however] say that in the case of *Anvádheya* and a gift through affection, the association of daughters and sons is independently laid down [by this text].

Among sisters, Manu states a distinction [ch. ix., v. 192]:—"*Stridhana* (woman's property) goes to her children, [for] the daughter is a sharer thereof, provided she be not given away [in marriage]; but if married, she receives a mere recognition of right."[6] *Tadanśinî* [means] the receiver of a share equal to [that of the] son. *Aprattá*, unmarried. The meaning is that if an unmarried daughter exists, the married one receives something [small] only [in token of] recognition. In default of an unmarried daughter, the share of the married daughters is equal

[1] Vír. l. 215, p 2.
[2] Mit. ch. ii. l. 57, p. 2; Vír. l. 197, p. 1; and Kam.
[3] Vír. l. 216, p. 2; Kam.
[4] Mit. ch. ii. l. 63, p. 1; Kam.; Vír l. 216, p. 1.
[5] Mit. ch. ii. l. 63, p. 2.
[6] Vír. l. 216, p. 2; Vya. M. and Kam.

to [that of the] brothers, according to the text of Kátyáyana [which says]:—"Sisters having husbands should share with brothers."[1]

Something should be given to the daughters of daughters also according to Manu (ch. ix., v. 193) [who says] :—"Even to the daughters of daughters something should be given according to their worth, from the assets of their mother's mother, on the score of natural affection."[2]

But the *yautaka* (marriage gift of a woman) goes to the unmarried [daughters] alone, not to the sons. To this effect the same [author says] [ch. ix., v. 139]:—"Whatever is the *yautaka* [property] of the mother is the portion of the unmarried daughter."[3] According to Madana, *yautaka* is that which is obtained by a woman at the time of marriage or other (ceremony) whilst seated with her husband on one seat as [shewn] by the explanation of Nighaṇṭu, [viz.,] *yutayo yautakam* (what belongs to two joined, is *yautaka*).

* ६२ * In respect to the aforesaid technical *stridhana* except the *anvâdheya* and the *prîtidatta* of the husband, Gautama states a distinction :—"*Stridhana* (woman's property) goes to her daughters unmarried and indigent."[4] *Apratishṭhitáh* [such as are] destitute of wealth. The daughter of a Bráhmaṇí wife [however] may take the wealth even of her stepmother, as Manu says [ch. ix., v. 198]:—"The wealth of a woman which has been in any manner given to her by her father shall be taken by the Bráhmaṇí [daughter] as well as by her offspring."[5] The particle *vá* means *and;* so that [the use of *vá* shows that] 'by division' is to be understood. Some say that the word Bráhmaṇí is representative of any girl of equal or superior caste; but the authority for this [supposition] is questionable.

In default of daughters, the issue of those daughters [succeeds] according to Nárada, who says:—"The daughters [take the wealth] of the mother, failing the daughters, their issue."[6] A distribution among daughters by different mothers, as also among the sons of different daughters' sons, is made by analogy of the rule—"in the case of sons of different fathers, the allotment of shares is according to fathers" [*i. e.* per stirpes]. As for the text of Yájñyavalkya (ch. ii., v. 117) [which says] :—"The daughters share the residue of their mother's property after [the payment of her] debts, and [their] issue succeeds in their default,"[7] some say that the term *anvaya* [issue] is even there indicative of the offspring of daughters; others [however] say that in default of daughters the sons alone should take, since the

---

[1] Vír. l. 216, p. 2. [2] Mit. ch. ii., l. 63, p. 1; Vír. l. 216, p. 2; and Kam.
[3] Vír. l. 216, p. 2; Kam. and Vya. M.
[4] Mit. ch. ii., l. 63, p. 1; Vír. l. 217, p. 1; Kam. and Vya. M.
[5] Mit. ch. ii., l. 63, p. 2; Vír. l. 217, p. 2; Kam. and Vya. M.
[6] Mit. ch. ii., l. 63, p. 1; Vír. l. 217, p. 1; Kam. [7] Vír. l. 217, p. 1.

word '*tat*' in the text of Nárada above [cited] points to the mother alone.[1] And this view agrees with the custom: *Śesham ṛiṇát* (residue after debt) [means] according to the *Sámpradáyikas* (men conversant with usage) that the sons alone should take the [mother's] property [when it is] equal to, or less than the [amount of the] debt.

In default of the daughters and the rest, the sons, grandsons, and the rest should succeed, because, says Kátyáyana:—"But on failure of daughters the inheritance belongs to the sons."[2] This right [of inheritance] of daughters and the rest in the mother's property exists only in [respect of] the *adhyagni, adhyávahanika,* and other aforesaid [kinds of the] technical *stridhana;* for if it related to all wealth in which their mother had property, the technical term [viz., *stridhana*] would be nugatory. Hence the texts before quoted containing [the term] *stridhana* (woman's property), from Bṛihaspati, Gautama and others, such as *stridhanam syádapatyánám* (a woman's property shall belong to her children), *stridhanam duhitṛiṇám* (a woman's property is of [her] daughters and the rest), have reference [to woman's property] technically [so called]. Those texts again which, although destitute of the term *stridhana* (woman's property) have the same meaning, such as *Bhajeran Mátṛikam rikthan* (they should divide the maternal heritage), and the rest, have also reference to the same [kind of *stridhana*] inasmuch as there is brevity in supposing one origin [for all the different texts on the same subject]. As for the text of Yájñavalkya [ch. ii., v. 117]: "Let sons divide equally, both the effects and the debts after [the demise of] their parents," it relates to what is acquired by inheritance, [or] spinning, and the like, excepting the technical *stridhana.* Therefore [even] if there be daughters, the sons or other [heirs] alone succeed to their mother's property, save the technical *stridhana.*[3]

[As regards succession to] the technical *stridhana* in default of both kinds of issue, Yájñavalkya states a distinction [ch. ii., v. 144]:—"Her kinsmen *(bándhavás)* take it, if she die without issue."[4]

The same [author] expounds the succession of kinsmen according to the different kinds of marriage.[5] "The property of a childless woman married in the *Bráhma* or any other [of the four approved forms of] marriage goes to her husband; in the remaining [four forms of marriage] it goes to her parents.[6] But if she leave female issue, [it will go to her daughter's daughters]."[7] Failing the husband, the

[1] Page 96 above.
[2] Vír. l. 217, p. 1; Kam.
[3] Jim. p. 131.
[4] Vír. l. 218, p. 2; Kam. and Vya. M.
[5] Yáj. ch. ii., v. 145.
[6] Vír. l. 218, p. 2; Kam. and Vya. M.
[7] Vijñáneśvara (Mit. ch. ii., l. 63, p. 1) distinctly mentions daughter's daughters, and gives his reason for so doing.

nearest to her in his family takes it; [similarly] failing the father, the nearest to her in her father's family succeeds; as Manu in the text [ch. ix., v. 187]:—"Of the nearest *sapiṇḍa*, the wealth [of the deceased] shall be" declares propinquity to the deceased as the criterion of the right to [take] wealth. As regards [the statement] in the Mitákshara[1] that* "on failure of the husband, it goes to *tatpratyásanná* * ६३ (the nearest to that) *sapiṇḍas*; and on failure of the father, to *tatpratyásanná* (the nearest to that) *sapiṇḍas*, even there the [word] *tatpratyásannah* is [to be dissolved as] *tena asyáh pratyá sannáh* [the nearest to her] through him, so as to mean ('the nearest in his family through him'). In the four [forms of marriage] beginning with *Bráhma* relates to the Bráhmaṇa on account of these (forms) alone being lawful in respect to him. In the case of Kshatriyas and the rest, to whom the *Gándharva* [form of marriage] is lawful, the wealth of even her who has been married according to that [form] belongs to the husband alone. To the same effect [says] Manu [ch. ix., vv. 196, 197]:—"It is ordained that the property [of a woman] married in the *Bráhma, Daiva, A'rsha, Gándharva,* or *Prájápatya* form of marriage, and dying without issue, shall go to her husband alone; but it is ordained that if she obtained wealth when married in the *Aśura* and the like form, on her death without issue, it goes to her mother and father."[2]

On failure of the husband of a deceased woman, in the case of marriage according to the *Bráhma* or the like form, or on failure of her parents in the case of marriage according to the *Aśura* or the like form, Bṛihaspati names the persons entitled to the technical *stridhana* (woman's property):—"The mother's sister, the wife of the mother's brother, the wife of the father's brother, the father's sister, the mother-in-law, and the wife of an elder brother, are pronounced equal to mothers. If they leave no son born in lawful wedlock, nor daughter's son, nor his son, then the sister's son and the rest shall take their property."[3] Here the absence of the daughter and also of the daughter's daughter must be understood [as the condition precedent]; because only on failure of them does the right [of inheritance] belong to the son born in wedlock, or to the daughter's son.

In respect of property given by the *bandhus* (cognate kindred) at an *Aśura* or the like other [form of marriage], Kátyáyana says:—"That which was given to her by her *bandhus*, goes on failure of them, to her son."[4]

But as regards the *Śulka* (perquisites) Gautama observes:—"The sister's *Śulka* (perquisites) belongs to uterine brothers, and then to her

[1] Ch. ii., l. 63, p. 1.
[2] Vír. l. 219, p. 1; Kam. and Vya. M.
[3] Vír. l. 219, p. 2; Kam. and Vya. M.
[4] Vír. l. 219, p. 2; Kam. and Vya. M.

mother.[1] As to what Śankha says [viz.] :—"The *Sulka* [perquisite] belongs to the bridegroom himself;[2] that must be understood [to relate to] one dying previous to [the celebration of] her marriage. Here Yájñavalkya states specially [ch. ii., v. 146] :—"If she die [after betrothal] the gifts may be taken [by the bridegroom] after the expenses on both sides have been deducted." The meaning is that the husband may take [back] if his bride be dead, what remains of the *Śulka* (perquisite) previously given, after [deducting] the expenses incurred by himself and her father. On a certain point Baudháyana states a distinction :—"The wealth of a deceased maiden may be taken equally by the uterine brothers; on failure of them, [by] the mother; or in default of her, [by] the father."[3]

The *Sámpradáyikás* (those conversant with usage) declare that this [text] relates to ornaments and the like presented by the mother's father and the like, at the time of gift by speech[4] to a girl [who afterwards] dies before [completion of] the marriage.

---

## *ANAŃŚAH* (PERSONS EXCLUDED FROM INHERITANCE.)

Persons excluded from heritage.

Yájñavalkya says [ch. ii., v. 140] :—"An impotent person, an outcast, and his issue, one lame, a madman, an idiot, a blind man, and [a person] afflicted with an incurable disease, are [persons] not entitled to share, and are to be maintained."[5] *Tajjáh*, born of him, the outcast.

Those that regain, after division, virility or the other [absent qualifications] by medicine or other [means] do receive their share, like a son born after partition.

Manu [ch. ix., v. 201] [says] :—"The impotent and the outcast are without a share; so are persons born blind and deaf; also a madman, an idiot, one dumb, and such as are destitute of a sense.[6] *Nirindriyáh*, [persons] deprived of the sense of śmell or the like. Nárada :—"An enemy to his father, an outcast, an impotent person, and *apayátrita*, or one expelled, should not get a share [of the heritage] even if they be *Aurasa* (legitimately born sons); how then can a *kshetraja* (son by an appointed kinsman) [get under similar circumstances]?

---

[1] Mít. ch. ii., l. 63, p. 2; Vír. l. 219, p. 2; Kam. and Vya. M. [2] Vya. M.

[3] Kam.; Vya. M.; Vír. l. 219, p. 2.

[4] This "gift by speech," called *Vág-dána*, should precede the regular ceremony by a considerable period; but at present this gift has become quite formal, and is made only a few minutes before the sacrifice.

[5] Vír. l. 221, p. 1; Kam. and Vya. M. [6] Vír. l. 221, p. 2; Kam. and Vya. M.

Persons afflicted with an obstinate and agonizing disease, idiots, the insane, blind and lame, are to be maintained by the
* ६४ family, but their sons are entitled to take the share.[1] **Apayatritah* [means] according to Madana, one outcast by kinsmen after *ghaṭasphoṭa* (the ceremony of breaking a waterpot), or the like, for high treason or a similar crime. But properly it means one who goes across the sea in a vessel, or the like, to another quarter [of the globe] for trading. Because, communion [with such a person] is forbidden in this *Kali* age by [the text]. "A *dvija* [one twice-born] who has passed the sea in a ship, should not be admitted [into the caste] even though he has performed penance [for it],"[2] and because *ghaṭasphoṭa*[3] and excommunication are not prescribed for enmity to the sovereign and the like. Śankha and Likhita [say]:—"Inheritance and oblations of *Piṇḍas* (boiled rice) and water are withheld from an *Apayátrita* (a traveller to a distant country)."[4] Vasishṭha:—"Those who have changed [the domestic order] and entered into another are debarred from shares."[5] The meaning is the *naiṣṭhika brahmachári* (perpetual student), the *Vánaprastha* (hermit), and the *yati* (ascetic). Kátyáyana:—"The son of a woman married out of her order [among the sisters], as also he who is born of a *Sagotra* (one belonging to the same *gotra* or family), and an apostate from *pravrajyá* (or the last order) never obtain the inheritance."[6] *Sagotrát* means one begotten by a man on a wife married from the same *gotra*. *Akramoḍhásutah* [means] according to some, the *Kshetraja*, *Kánína* and such other [sons].[7] But properly [speaking], when a younger daughter has been married, whilst her elder sister is still unmarried, they are then both said to be *akramoḍhá* (or 'married out of order'). If [the son] be of the same class as his father, his qualification for inheriting is declared by the same [author]. "But the son of an *akramoḍhá* (woman married out of order) may inherit when he belongs to the same class with his father, and so may the son of a woman belonging to a different (*superior*) class [but] married in [proper] order."[8] A son begotten even by a husband on a wife sprung from a higher class, cannot inherit, as said by the same [author]:—"The son of a woman married to a man of an inferior class cannot inherit. Food and raiment are considered to be due to him, to the end [of his life] from his kinsmen."[9]

---

[1] Vír. l. 221, p. 2; Kam. and Vya. M.

[2] See the Nirṇaya-sindhu, *parichchheda* 3, the first half, l. 62, p. 2, where this text is cited as occurring in the Adityapuráṇa, quoted in the Hemádri.

[3] A ceremony for severing relationship by breaking a waterpot.

[4] Kam.; and Vír. l. 222, p. 1. The latter refers this text to Ápastamba.

[5] Mit. ch. ii., l. 61, p. 2; Vír. l. 221, p. 2; Kam. and Vya. M.

[6] Vír. l. 222, p. 1; Kam. and Vya. M. [7] See page 49.

[8] Vír. l. 222, p. 1; Kam. and Vya. M. [9] Vír. l. 222, p. 1; Kam. and Vya. M.

If there be [other] sons endowed with good qualities, the vicious one is not entitled to inheritance according to Manu [who] says [ch. ix., v. 214]:—"All those brothers who are addicted to any vice are not entitled to inheritance."[1] Bṛihaspati:—"Though born of a woman equal in class, a son destitute of virtue is unworthy of the paternal estate; it is declared to belong to those who offer funeral oblations to the deceased, and who are well behaved. A son relieves his father from creditors and debtors; consequently there is no use of a son who acts otherwise."[2]

These persons excluded from inheritance must however be maintained during life by those who take the inheritance; as Manu says [ch. ix., v. 202]:—"But it is fit that the wise, according to their means, should give food and raiment even to all [disqualified from inheritance] to the last, lest he who does not give become degraded."[3] *Atyantam* [means] during life. To the same effect is the text of Yáj̃ñavalkya cited before, [viz.,] *Bhartavyáste-nirans-aḳáh,* ("Those excluded from inheritance are to be maintained.") Those who have entered into another order as well as outcasts, and the sons [of both] are not to be maintained. And so Vasishṭha [says]:—"Persons who have entered into another order are incompetent to take shares; so is an impotent person, a madman, or an outcast. Maintenance is to be given to the impotent and madmen.[4] Here the mention of two in respect of maintenance is [meant] as the exclusion of the other two. Devala:—"When the father is dead, an impotent man, a leper, a madman, an idiot, a blind man, an outcast, the offspring of an outcast, and a person wearing [a prohibited] sign are not competent to take a share of the heritage. Boiled rice and raiment are to be given to them, excepting the outcast."[5] *Lingí*, one wearing a prohibited sign. Baudháyana [says]:—"Let the co-heirs support with food and raiment those who have abandoned popular customs, one blind, an idiot, an impotent person, one in distress, one afflicted with a disease, and persons doing prohibited actions, excepting the outcast and his issue."[6] According to Madana and others, one degraded from *Sannyása* (the fourth order), and his sons also are not to be maintained.

But the blameless sons of those excluded from inheritance do inherit, according to the text of Vishṇu [which says]:—"The legitimate sons of those alone [out of the persons excluded from inheritance] inherit, but not the sons born to a degraded man. The sons born after the

[1] Vír. l. 222, p. 1; Kam. and Vya. M.
[2] Vír. l. 222, p. 1; Kam. and Vya. M.
[3] Vír. l. 221, p. 2; Kam. and Vya. M.
[4] Mit. ch. ii., l. 61, p. 2; Vír. l. 221, p. 2; Kam. and Vya. M.
[5] Vír. l. 221, p. 2; and Kam.
[6] Kam.

49064

commission of the degrading act, or from a woman of a higher class, cannot inherit. *Nor do their sons participate in the property * ६५ of their paternal grandfather"; and [further] according to the text of Yájñavalkya [which says] [ch. ii., v. 141]:—"But their blameless sons, whether legitimate or *Kshetrajá* (the offspring by a kinsman), are entitled to inherit."[1]

Yájñavalkya prescribes a special rule concerning the daughters and wives of these [ch. ii., vv. 141 and 142]:—"Their daughters should be maintained until they are provided with husbands. Their childless wives conducting themselves aright, should also be supported; but if they are unchaste, they should be expelled, and similarly those who are perverse."[2] According to Madana and others, in the case of unchastity, they should be expelled and not fed, [while] in the case of perverseness they should indeed be expelled, but maintenance is certainly to be provided for them.

## RECOVERY OF DEBTS.

[*Ṛiṇádánam.*]

Herein Bṛihaspati lays down [rules] for [regulating] a creditor's conduct.

Recovery of Debts.

"A creditor should always lend either after securing a pledge of adequate value, a binding agreement, a surety, or a document, or before witnesses."[3] *Bandha* (*a binding agreement*) [means] an agreement by the debtor, such as—'As long as your debt is not discharged, so long will I not alienate, either by gift, sale, or mortgage, or in [any other] like [mode] this house, land or other [pledge].'

*Lagnaka* [means] a surety. The same [author] says:—"[That loan] which is increased to four times, or eight times, is termed *kusída* (usury) because it is exacted without compunction, from a *kutsita* (wretched) and *sídat* (distressed.)"[4]

Kátyáyana [says]:—"That interest above [the allowed rate] which is promised by a debtor in a time of extreme distress ought to be always paid by him; it is termed *kárita* [stipulated interest]. When any one pays interest from time to time, that [interest] is declared to be *Shikhávriddhi* [hair-like-increasing-interest]."[5] *Pratikálam* [means] by the day, month, or year. Yájñavalkya [ch. ii., v. 37:—]"An eightieth part [of the principal] is the monthly interest when a pledge has been delivered, otherwise it may be in the direct order of the classes, two, three, four, or five [per cent]."[6] *Anyathá* [means] if there be

[1] Vír. l. 221, p. 2; Kam. and Vya. M.
[2] Vír. l. 222, p. 1; Kam. and Vya. M.
[3] Vír. l. 90, p. 2; Kam. and Vya. M.
[4] Vír. l. 90, p. 2; Kam. and Vya. M.
[5] Vír. l. 91, p. 1; and Kam.
[6] Vír. l. 91, p. 2; Kam. and Vya. M.

no pledge. [Says] Vyása:—"Monthly interest is declared to be an eightieth part [of the principal]; if a pledge be given, a sixtieth part; if there be [only] a surety; and two in the hundred when there is no security." Yájñavalkya [ch. ii., v. 38]:—"[Borrowers] who travel through forests [should pay] ten, and such as traverse the ocean twenty in the hundred." *Dadyuh* (should pay) is to be supplied from the following sentence:—'or all of whatever class should pay the interest stipulated by them.'[1]

Vishṇu [says]:—"In all the classes, if a person borrow money under a promise to repay it the next day, and not pay it with the desire of profiting himself, he shall pay interest from that date."[2] The interest on a *yáchita* (loan for use) is [thus] declared by Kátyáyana:—"He who having received a loan which he had solicited, goes to a foreign country without restoring it, must pay interest after one year. If a man having contracted an *Uddhára* (loan without interest) does not pay, and when applied to, absconds to a [distant] country, that loan shall carry interest after three months. [A debtor] who, residing in his own country, does not pay on demand, shall be made to pay, however unwilling [he may be] interest[3] thereon though not stipulated [after the lapse of one year)."[4]

Nárada:—"There shall be no interest, in the absence of a stipulation [to that effect] on things lent through friendship; but interest will run after half a year even without an agreement."[5] Kátyáyana [says]:—"What has been lent through friendship shall bear no interest until it be demanded back; but if on demand it be not restored, it shall bear interest at the rate of five in the hundred. Should a man, having bought a marketable commodity, go to another country without paying the price, that price shall bear interest after three *ritus* (*i. e.* six months).*

* ६६ A deposit, the balance of interest, a commodity sold, and [the price of] a commodity purchased not being paid [or delivered] shall bear interest at the rate of five in the hundred."[6]

Nárada:—"The price of a commodity sold, wages, a deposit, a fine inflicted, an improper gift, and a stake won in gambling, carry no interest without a special agreement."[7] *A'kshika*, won in gambling; *Avivakshita*, without special agreement. Yájñavalkya [ch. ii., v. 44]:—"When a creditor does not receive back a loan tendered, it will from that time carry no interest if deposited with a third person."[8]

---

[1] Vír. l. 91, p. 2; Kam. and Vya. M. [2] Vír. l. 93, p. 1; Kam. and Vya. M.
[3] *Kárita* [means] interest.
[4] Mít. ch. ii., l. 18, p. 1; Vír. l. 93, p. 1; Kam. and Vya. M.
[5] Mít. ch. ii., l. 18, p. 1; Vír. l. 93, p. 1; Kam. and Vya. M.
[6] Vír. l. 93, p. 1; Kam. and Vya. M.
[7] Mit. ch. ii., l. 18, p. 1; Vír. l. 93 p. 2; Kam. and Vya. M.
[8] Vír. l. 94, p. 1; Kam. and Vya. M.

Bṛihaspati:—"On precious metals, the interest may make [the debt] double; on clothes and the baser metals, treble; on grain, quadruple; so also on edible vegetable products, beasts of burden, and wool or hair."[1] *Śada.* [means] flowers, roots, fruits, &c. *Váhya,* [vehicles such as] bullocks, &c. *Lavah,* the wool of sheep, the hair of the *chamari* (*Bos Grunniens*), &c. As for [the text of] Manu [ch. viii., v. 151]:—"Interest on grain, edible vegetable products, on wool or hair, on beasts of burden, must not exceed five times the debts;"[2] it is a prohibition of sixfold or higher interest. Kátyáyana says:—"For gems, pearls and coral, for gold and silver, for [cloth made of the produce of] fruit, or of silk, or of wool, the interest stops when it doubles [the debt]."[3] *Kaiṭam,* [cloth] produced by an insect, such as the *paṭṭa, dukúla, tasari,* &c. Vasishṭha:—"Interest on copper, iron, bell-metal, iron filings, tin, and lead, makes the debt threefold only if long time have elapsed."[4] Vyása:—"Interest increasing the debt sixfold is declared allowable on vegetables, cotton, and seeds."[5] Kátyáyana:—"For all sorts of oil and spirituous liquors, for the different kinds of clarified butter, for molasses and salt, interest is known to be octuple."[6] Vishṇu:—"On precious metals the highest increase [or interest] shall be double; on cloth, treble; on grain, quadruple; on fluids, octuple; on female slaves and beasts, their offspring shall be taken as interest." So, "Flowers, roots, and fruit, what is [sold] by weight the increase is eight-fold."[7]

Narada:—"Of interest on loans this is the paramount (rule), but the rate customary in the country where the debt was contracted may be different."[8] *Sárvabhauma, i. e.* paramount or universal. And this relates to a debt doubled, or more than doubled by interest in a single transaction; for if at a different time, a fresh transaction be entered into with a different person, or even with the same person with a less or greater [amount] and the like, in such a case, even the highest (allowable) interest may receive addition. So also Manu [ch. viii., v. 151]:—"Interest on money received at once (not month by month, or day by day, as it ought) must never be more than double the debt (that is more than the amount of the principal, paid at [one and] the same time)."[9] But in any one transaction where it is realized at various times more than the highest (allowable) interest may be levied according to Vijñáneśvara [Mit. ch. ii., l. 18, p. 2] and the other *Sámpradáyikas.*

[1] Vír. l. 92, p. 1; and Kam.

[2] Vír. l. 92, p. 1; Kam.; Vya. M.; and Mit. ch. ii., l. 18, p. 2.

[3] Vír. l. 92, p. 2; and Kam. [4] Vír. l. 92, p. 2; Kam. and Vya. M.

[5] Vír. l. 92, p. 2; Kam.; and Vya. M. These words read बीजेक्षौ instead of बीजेषु, so as to include sugarcane.

[6] Vír. l. 92, p. 1; and Vya. M. [7] Vír. l. 92, p. 2. [8] Vír. l. 92, p. 2.

[9] Mit. ch. ii., l. 18, p. 2; Vír. l. 92, p. 2.

## OF PLEDGES.—(*A'DHI.*)

Bṛihaspati:—"*A'dhí* is a pledge, and is declared to be divisible into four kinds:—Moveable, immoveable, for custody [only], and for use."[1] Nárada:—"A pledge is that which is deposited, and is of two kinds, (one) to be released at a fixed time, and (the other) to be retained until payment."[2]

Hárita [says]:—"A pledge must be preserved in the same state in which it was deposited, otherwise (the pawner) shall lose his interest, and in case of injury to the pawn, shall forfeit his principal."[3] *Vyatikramé* [means] the destruction of the pledge. Yájñavalkya [ch. ii., v. 59]:— "[There shall be no interest] if a pledge for custody be used or a pledge for use be damaged."[4] **Hápita* means so injured as to be made unfit for use. Kátyáyana:—"He who employs on work an unwilling pledge without the assent of the pawner, shall be made to pay the profits of that work, or shall receive no interest."[5] *Karma-kárayet* [means] he shall employ; *Karma-phalam* [is] wages.

* ६७

Yájñavalkya [ch. ii., v. 59]:—"[A pledge] spoiled, or destroyed, unless by the act of God or the king, shall be made good [by the creditor]."[6] *Nashṭah* means deformed [damaged.] *Deyah* [means] should be restored in its original state. Bṛihaspati:—"A pledge being worn out by enjoyment, the principal is destroyed." Vyása declares that in the case of a pledge being destroyed, its value must be paid. "If gold or other (precious) thing shall be pledged, and lost by the fault of the debtor,[7] the creditor, on being paid the principal and interest of his loan, shall be made to pay the price of the pledge."[8] Nárada:—"If a pledge be destroyed, the principal itself shall be forfeited, unless the loss was caused by the act of God or of the king."[9] Manu [ch. viii., v. 144]:—"The [pawnee] must satisfy the pawner by the payment of the price [of the loan] lest he should become a thief of the pawn."[10]

Bṛihaspati:—"If a pledge be destroyed by the act of God or the king, the debtor shall be made either to give [another] pledge or pay the principal with interest."[11] Vyása [says]:—"If the pledge be destroyed by the act of God or the king, there is no fault of the creditor in any way."[12] Kátyáyana:—"If without any fault of the creditor, the pledge be damaged or destroyed, the debtor shall be compelled to deliver another; [as] he is not exonerated from the debt."[13] Yájñavalkya [ch. ii., v. 60] also [says]:—"Acceptance of the pledge is [requisite] for the completion of

---

[1] Vír. l. 94, p. 1. [2] Mit. ch. ii., l. 24, p. 1; Vír. l. 94, p. 2; Kam. and Vya. M.
[3] Vír. l. 94, p. 2; Kam. and Vya. M. [4] Vír. l. 95, p. 1; and Kam.
[5] Vír. l. 95, p. 1; and Kam. [6] Vír. l. 95, p. 2; and Kam.
[7] Grahítá or receiver is the term used. [8] Vír. l. 95, p. 2; Kam. [9] Id. [10] Id. [11] Id.
[12] Vír. l. 95, p. 2; Kam. and Vya. M. [13] Vír. l. 95, p. 2; and Kam.

the contract [of pawn]. If it be lost, [even] when carefully kept, another must be substituted, or the creditor must receive the amount due to him."[1]

Nárada:—"Pledges are declared to be of two kinds, moveable and immoveable; both are valid if there is [actual] enjoyment, but not otherwise."[2] Vasishṭha also [says]:—"In the case of several deeds being passed at the same time with respect to one pledge, he who first got possession of it has a superior claim."[3] The same:—"If two creditors should, on the very same day, come to take possession of their pledge, the rule is that it must be equally divided and enjoyed by them."[4] Kátyáyana:—"Should a man hypothecate the same thing to two creditors, the first hypothecation shall be recognized, and the pawner punished as for theft."[5]

Yájñavalkya [ch. ii., v. 58]:—"A pledge, not redeemed until the principal is doubled, is forfeited. That with a term of redemption fixed is lost on the expiry of that term; [but] a usufructuary pledge is never forfeited."[6] Bṛihaspati:—"Gold being doubled, or in the case of a stipulated period, that period having expired, the creditor becomes the owner of the pledge after a lapse of fourteen days."[7] Vyása:—"After giving notice to the debtor's family, a pledge for custody may be appropriated when the principal is doubled; and so may a pledge for a limited period when that period is expired."[8] Bṛihaspati:—"When the debt is doubled by the interest, and the debtor is either dead, or has absconded, the creditor may attach his pledge, and sell it in the presence of witnesses."[9] Yájñavalkya [ch. ii., v. 61]:—"A debtor shall be compelled to pay with interest a debt contract on a *charitra* (friendly) pledge; and to pay two-fold a debt contracted on a chattel delivered as an earnest."[10] When a borrower, from his confidence in the lender, deposits with him a valuable pledge for a small consideration, or where the lender, from a [like] confidence in the borrower, advances a large sum on a pledge of small value, the transaction is said to be a *charitra* pledge; or *charitra* may mean the merit from ablution in the *Gangá*, &c.; and *charitrá bandhaka* may be a contract where such merit is pledged. In this manner, in case of a *charitra* pledge of both species, the chattel [pledged] is not destroyed even if the principal be doubled; the payment even of that double amount must be made. Even in the case of a pledge delivered as an earnest, it is not lost on the principal being doubled.*

---

[1] Vír. l. 96, p. 1; Kam. and Vya M.

[2] Mit. ch. ii., l. 25, p. 1; Vír. l. 96, p. 1; and Kam.

[3] Vír. l. 96, p. 1; Kam. and Vya. M. [4] Vír. l. 96, p. 2; and Vya. M.

[5] Vír. l. 96, p. 2; Kam. and Vya. M. [6] Vír. l. 97, p. 1; and Kam.

[7] Vír. l. 97, p. 2; and Kam. [8] Vír. l. 97, p. 2. [9] Id.

[10] Vír. l. 98, p. 1; and Kam.

The same [ch. ii., vv. 62, 63]:—"The pledge shall be restored to the debtor offering to redeem it, on pain of the creditor not doing so, being deemed a thief. In the absence of the creditor, the debtor may pay the debt to his kinsmen and take back his pledge; or appraising it at its value at the time, may let it remain with the creditor, without interest."[1] The meaning is, if the creditor be not present, he [the debtor] may place the amount of his debt with interest in the hands of some other person of the creditor's family, and take back his pledge; or if he desire to pay the debt by selling the pledge, he may have it valued at the time and leave it with the creditor without interest." Bṛihaspati:—"When land or other [property] has been enjoyed, and more [than the principal] has accrued therefrom so as to cover the principal and interest, the debtor shall obtain his pledge." Yájñavalkya [ch. ii., v. 64]:—"Whenever a debt under mortgage has become doubled by interest, then the pledge shall be returned, when double the principal has been received out of the produce."[2]

## OF SURETIES.

(*Pratibhu.*)

Sureties.

Now, surety is of three kinds according to Yájñavalkya [ch. ii., v. 53]:—"Suretyship is ordained for appearance, for trust, and for payment."[3] *Pratyayah* [means] the inspiring of confidence by saying "this man is honest." Bṛihaspati, again, mentions four kinds of sureties:—"The first says, 'I will point him out,' the second 'this man is trustworthy,' the third 'I will pay this money,' and the fourth 'I will cause it to be paid.' *Árpayámi* means 'I will cause [the debtor] to pay it.'"[4] Kátyáyana:—"Three *Paksha* (fortnights) at the most should be allowed for the finding of the absconding [principal]. If during that time the surety point him out, then he shall be absolved."[5] 'Three fortnights' are mentioned only as an example, meaning that so much time must be allowed as is required [for the search].

Kátyáyana:—"If a surety for the appearance of a debtor produce him not at the time and place [agreed on], he shall discharge what he is bound for, unless he was prevented by the act of God or the king."[6] *Nibandhamávahet* [means] shall pay the sum due to the creditor. Bṛihaspati:—"The two first on failure of their engagement must pay the sum lent at the time stipulated. The two last, and in their default, their issue, shall

[1] Vír. l. 98, p. 2; Kam. and Vya. M. [2] Vír. l. 99, p. 1; Kam. and Vya. M.
[3] Vír. l. 99, p. 2; Kam. and Vya. M. [4] Id.
[5] Mít. ch. ii., l. 24, p. 1; Vír. l. 100, p. 1; Kam. and Vya. M.
[6] Vír. l. 100, p. 1.

[similarly] pay, when sued."[1] Kátyáyana:—"The debt of suretyship need on no account be paid by the grandsons, but must be made good by the son, without interest."[2] Vyása:—"A grandson shall pay without interest the debt of his grandfather, and so shall a son the debt of suretyship by his father; [with respect to the debt of the latter kind] the grandson and the great grandson should not be made to pay, such is the conclusion."[3] [The substance is that] the grandson shall pay only the principal of the debt of his grandfather; and if that debt be of suretyship, then even the son shall pay it similarly. This would be so only if the suretyship were entered into without receipt of wealth. In the case of suretyship undertaken after receipt of wealth, the son as well as the grandson shall pay it [the debt] with interest. And, moreover, Kátyáyana [declares]:—"Should a man become surety for the appearance of a debtor, on receipt of a pledge from him, his son shall be compelled to pay that debt even without assets from his father."[4]

Yájñavalkya [ch. ii., v. 55]:—"When there are more sureties than one, they shall pay the debt proportionately. But when they are bound severally, the payment shall be made [by any of them] as the creditor pleases.[5] *Ekachchháyá* [means] the condition made by each severally, that he will pay the whole [debt]; in the case of sureties with such an agreement some one of them shall pay according to the creditor's demand. It must hence be understood that, in the case of a compact of each to pay his share, payment shall be made accordingly." Kátyáyana:—"Of sureties jointly and severally bound, any one of them that is found may be made to pay. If he be absent in a foreign country, then his son shall be made to pay the whole; but if he be dead, his son shall pay according to his father's share."[6] *Pitránsát* means in proportion to the father's share [of the debt guaranteed].

Yájñavalkya also [ch. ii., v. 56]:—"When a surety has been made* to pay publicly a debt to the creditor, the debtor shall * ६९ be forced to repay double the sum to the surety." Bṛihaspati:—"Should a surety, being harassed, pay the debt for which he was bound, he shall be entitled to receive twice the sum from the debtor, after the lapse of a month and a half."[7]

---

[1] Vír. l. 100, p. 2; Kam. and Vya. M. [2] Vír. l. 100, p. 2; and Kam.
[3] Vír. l. 100, p. 2; Kam. and Vya. M.
[4] Mit. ch. ii., l. 22, p. 2; Vír. l. 101, p. 1.; Kam. and Vya. M.
[5] Vír. l. 101, p. 1; Kam. and Vya. M.
[6] Mit. ch. ii., l. 23, p. 1; Vír. l. 100, p. 1; Kam. and Vya. M.
[7] Vír. l. 101, p. 2; Kam. and Vya. M.

## OF RECOVERY OF DEBTS.

*Ṛiṇagrahaṇam.*

Bṛihaspati:—"A debt admitted by the debtor, may be recovered from him by remedies like mild remonstrance, conciliatory advice, circumvention, violent compulsion, and confinement at home."[1] *Pratipannam* [means] assented to by the debtor. *Upakramaiḥ* [means] by means of remedies. The same author thus explains the [said] remedies:—"When a debtor is made to pay by the advice of friends or kinsmen, by mild remonstrance, by constant following, or by entreaty, that mode of recovery is said to be consonant to equity. When a creditor with an artful design borrows anything of his debtor, or withholds a thing deposited by him, and thus compels payment of the debt, this is called circumvention. It is called violent compulsion when a debtor is tied and taken to the house [of the creditor], and is made to pay his debt by beating and such other means. When a debtor is forced to pay his debt by the tying of his son, wife, and cattle, and by the doorway being obstructed [by the creditor], then is *ácharitam* (confinement) [said to be used]."[2] *Anugama* [means] following. *Práyah* [means] importunity. *Anváhitam* [means] an ornament or some such thing given to one to be handed over to another. With regard to the application of these remedies, Kátyáyana says:—"Let a creditor procure payment from a king, master, or a Bráhmaṇa by mild expostulation alone; from a friend or heir, by circumvention alone. Bhṛigu ordains that traders, cultivators of land, and artizans must be made to pay according to the custom of the country; while violent compulsion may be used in the case of the wicked [debtors]."[3] The same [author adds]:—"The debtor may be [dragged before] an assemblage of people, and [there] restrained until he pay the debt, according to the custom of the country."[4] The same [author] forbids the restraint of [a debtor] confined in respect of evacuations:—"If [one] confined should need the voiding of urine or fæces, he should be followed, or should furnish a security."[5] *Nibandham* [means] a son or the like [as a hostage] in lieu of himself.

Recovery of debts.

The same [author] adds that the confined [debtor] should be set free for meals on receiving a security for his [the debtor's] appearance:—"If he has furnished security, he should be released every day at the hour of meals and at night [while] the security remains in custody. He who cannot or will not tender a surety for appearance, should be confined in jail or [in the custody of] guards. A venerable, trustworthy, and virtuous

Security.

[1] Vír. l. 103, p. 1; and Kam. [2] Vír l. 103, p. 1; Kam. and Vya. M.
[3] Vír. l. 103, p. 1; and Kam. [4] Vír. l. 103, p. 1. [5] Vír. l. 103, p. 2.

man should not be confined in jail; [but] may be released without a surety, or with a surety [taken], or on his oath."[1] *Na vá áśrayet* [means] does not offer. *Chárake* [means] in a house of correction. *Rakshínah*, &c. should be made over to guards. *Prátyayikah*, trustworthy.

Bṛihaspati [says]:—"The creditor may [either) recover a debt, the interest on which has ceased [owing to] the limit having been exceeded, or [he] may obtain a writing allowing compound interest."[2] *"Puṇávadhau* [means] when doubling or the like has taken place. Hence the possibility of interest ceasing. *Udgráhayet* should take. *Chakravṛiddhi* [means] the calculation of interest on the interest added to the principal. Nárada (says):—"If owing to adverse times a debtor should be disabled, he should be made to pay [by instalments] from time to time, according to his ability as he improves."[3] Manu [says] [ch. viii., v. 177]:—"The debtor, if of an equal or a lower class, shall pay off the creditor by [personal] labour; but if of a higher class shall pay it little by little."[4] As for [the text of] Yájñavalkya [which says] [ch. ii., v. 43]:*—"A disabled [debtor] of an inferior class should be made to work for [the payment of] his debts; a disabled Bráhmaṇa, however, should be made to pay gradually, according to his ability;"[5] the word Bráhmaṇa [here] refers to one of a superior class. The same adds [ch. ii., v. 40]:—"[A creditor] recovering an acknowledged debt will not be liable to the blame of the king; [and] if the debtor should complain to the king, he should be fined and made to pay the debt."[6] Bṛihaspati [says]:—"This is the law in regard to an acknowledged [debt]; a [debtor], denying [his liability], shall be made to pay on proof by writing or witnesses. In a doubtful case, [the debtor], who claims an adjudication, should on no account be restrained; [for], he who restrains one who deserves no restraint, becomes liable to fine according to law."[7] *Ásedhah* means restraint under royal orders. The same:—"That debtor is termed *Kriyávádi* (one claiming adjudication), who says 'I will pay what may be found to be justly due.'"[8] Kátyáyana:—"A creditor who harasses a debtor claiming adjudication, shall forfeit his claim and pay an equal fine."[9] Bṛihaspati:—"In [the case of] a contested claim, whoever proceeds [to recover his debt himself] without reporting [the matter] to the king, shall be seized and punished; and his claim will not succeed."[10] Yama:—"A solvent debtor, who does not pay through wickedness, shall be made to pay [his debt] by the king who shall also take [a

* ১০

[1] Vír. l. 103, p. 2; Kam. [2] Vír. l. 104, p. 1; and Kam.
[3] Vír. l. 104, p. 2; and Kam. [4] Vír. l. 104, p. 2; Kam.; Mit. ch. ii., l. 19, p. 2.
[5] Vír. l. 104, p. 2; and Vya. M. [6] Vír. l. 103, p. 2.
[7] Vír. l. 104, p. 1; and Kam. [8] Vír. l. 104, p. 1.
[9] Mit. ch. ii., l. 19, p. 1; Vír. l. 104, p. 1; and Vya. M.
[10] Id.

fine of] double the amount." Yájñavalkya [ch. ii., v. 42]:—"The king shall make the debtor pay to him ten in the hundred of the awarded [claim]; and the successful creditor to pay five in the hundred."[1] *Daśakam* [means] with an excess of ten; in other words, the tenth and the twentieth share. The sense is that those shares belong to the king, and the rest to the creditor. The levy of a tenth [share] refers to a poor [debtor]. Nárada lays down a special rule in regard to a wealthy [debtor]:—"A debtor who being wealthy does not pay through wickedness, shall be made to pay [his debt] by the king who shall [also] take [a fine of] twenty [in the hundred]."[2] *Vinśakam* means twenty in the hundred.

Yájñavalkya states the order [of payment] in the case of more creditors than one coming to claim at one and the same time [ch. ii., v. 41]:—"A debtor shall be made to pay his creditors in the order of loans,[3] after discharging [those of] a Bráhmaṇa and afterwards to the king."[4] Kátyáyana quoted in the Vivádá Ratnákara says:—"If there are many debts at once, that which was first contracted shall first be paid after those of the king or a *Śrotriya* (a Bráhmaṇa learned in the Vedás). In the case of [contracts] written on the same day, the debt, the payment, the balance and the interest should be equal. In all other cases [the payment shall be] according to the order of time. He who proves that a certain thing was purchased [by the debtor] with his loan, shall be entitled to payment from the debtor, and not otherwise."[5]

Yájñavalkya [ch. ii., v 93]:—"The debtor shall write the sums paid by him [at several times] on the back of the document, or the creditor shall give an acknowledgment in his own hand."[6] Nárada [says]:—"When a debt is liquidated, [the creditor] shall pass a deed [of acquittance], or in its absence make a [public] acknowledgment. There will thus be a mutual acquittance of both the creditor and the debtor."[7] *Pratiśravah* [means] a deed of acquittance declaring satisfaction [of the debt].[8] Kátyáyana states the evil results [ensuing) to a debtor on the nonpayment of debt:—"He who having obtained a debt or the like does not repay it to the creditor, shall be born again [to be] a slave, servant, wife, or a beast [of burden] in the house of the latter."[9] *Uddhárah*

[1] Vír. l. 111, p. 1; and Vya. M. [2] Vír l. 111, p. 1; and Vya. M.

[3] If of the same class, to be paid in the order of loans; if of different classes, then according to the order of classes; Vír. l. 105, p. 1.

[4] "The king" stands here as illustrative of the Kshatriya class; Vír. l. 105, p. 1.

[5] Vír. l. 105, p. 1; and Kam. [6] Vír. l. 110, p. 1; and Vya. M.

[7] Vír. l. 110, p. 1; and Vya. M.

[8] If *Pratiśravah* means a document, its use as an alternative to a *Lekhya* or writing seems tautological. The *Viramitrodaya* makes *Pratiśravah* mean a public verbal acknowledgment, which seems to be more correct. See Vír. l. 110, p. 2: see likewise Amarakośa, ch. i., sec v., v. 5.

[9] Vír. l. 110, p. 2; and Vya. M.

[means] debt. By [the use of the word] *Ádi* (et cetera), a [gratuitous] loan and a deposit are [meant to be] included. *Dásah* [means] a born slave. *Bhṛityah* [means] one purchased for a price. Nárada [says]:—"The debt or loan which the debtor does not repay [even] on demand shall multiply till it reaches to a thousand millions. On that amount having been reached, [the debtor] suffering [the consequences of] that act shall in each* [successive] birth be a horse, an ass, * ৭২ a bullock, or a slave."[1] *Pratigraha* means [that which was] promised to be given. Even Vyása:—"If an ascetic or an *agnihotri* (the keeper of a perpetual sacrificial fire) should die in debt, [the merit of] those austerities or that worship of the fire will belong to the creditor."[2]

Bṛihaspati says:—"The sons should pay the debt of their father when proved, as [though it were] their own; the debt of the grandfather should be paid without interest, the sons of grandsons need not pay."[3] Yájñavalkya [ch. ii., v. 50]:—"When the father is abroad, dead, or immersed in difficulties,[4] his debt, proved by witnesses if disputed, should be paid by the son and the grandson."[5] Nárada states that the debt should be paid by a son and the like who is twenty years old:—"When the father, the father's brother, or the eldest brother have gone abroad, the son shall not [be made to] pay before his twentieth year."[6] Kátyáyana:—"The debt [contracted] by the father, who though living is afflicted with a disease, or has remained away from his country, shall be paid after the twentieth year."[7] The word *Proshita* is illustrative even of one dead. For the same reason Vishṇu [says]:—"When the borrower is dead, or becomes a *Sannyásin* (a religious anchorite), or has lived abroad for twenty years, the debt should be paid by his sons and grandsons."[8] Nárada:—"On the death of the father, the sons, whether separated or united, shall pay his debt according to their shares, or he who succeeds to the charge [of the family affairs]."[9] Kátyáyana:—"While the father's debts remain [unpaid], the son shall not take the wealth of the father, which should be made over to the creditor; where [the father dies] without wealth, the son should be made to pay."[10] The term *dravyam* is to be construed with, *ṛite*, [so that] the meaning is 'without wealth.' Bṛihaspati [says]:—"The father's debts must be first paid; and then those of himself; the grand-

[1] Vír. l. 110, p. 2; and Kam. [2] Kam. and Vya. M. [3] Vír. l. 105, p. 2.
[4] Vijñáneśvara explains *vyasanábhipluta* as one afflicted with an incurable disease; Mitákshará l. 20, p. 2; so does Víramitrodaya l. 106, p. 1.
[5] Vír. l. 105, p. 2; and Kam. [6] Mit. ch. ii., l. 20, p. 2; Vír. l. 106, p. 1; and Kam.
[7] Vír. l. 106, p. 1; Kam. and Vya. M. [8] Vír. l. 106, p. 1; and Kam.
[9] Mit. ch. ii., l. 20, p. 1; Vír. l. 105, p. 2; Kam. and Vya. M.
[10] Vír. l. 106, p. 2; and Vya. M.

father's debts should be paid before both. This is the manner in which debts should always be paid."[1]

Yájñavalkya [ch. ii., v. 47] :—"The son shall not pay the paternal [debts] contracted for wines, lust and gambling, or due on account of the unpaid [portion] of a fine or a toll, or [on account of] an idle promise."[2] Bṛihaspati [says] :—"The son shall not be made to pay [the debts due by the father] on account of wines, dicing (gambling), idle promises, promises made under [the influence of] lust or anger, suretyship, and the unpaid portion of a fine or a toll."[3] Uśanas [says] :—"The son need not pay the fine, or the balance of a fine, a toll or the balance of a toll, or [any debt of the father] which is not proper."[4]

Yájñavalkya mentions the order of those [who are] bound to pay the debts [ch. ii., v. 51]:—"He who has received the estate or the wife [of the deceased], should be made to pay his debts; or failing them, the son who has not received an inheritance (*ananyáśrita*). In the case of a sonless [deceased], those who take the heritage [should be made to pay]."[5] *Rikthágráha* means one who takes the wealth [of the deceased] [either] justly, because his son, though living, is [laboring under] impotence or [other] similar disqualification; [or] unjustly [because there exists a son] without [any] defects. *Yoshidgráha* [is] one who similarly takes the wife of another. *Ananyáśritadravyatvam* (absence of the receipt of inheritance) is possible in two ways, because the negation [here spoken of] may either refer to property which belonged [at one time] to another or to property merely.[6] [The sum and substance is] :—Here (*i. e.* among those bound to pay debts) he who receives the estate is the first; failing him, the taker of the wife; failing him, a son [who has] received no inheritance; failing him, the son's son to the extent of the principal; failing him the *rikthinah*, *i. e.* those who take the estate, such as the son of son's son, wife, the daughter, or the like. When no inheritance has been received, the son of son's son, wife, or the like, need not pay [the debts]. The receipt of assets howsoever small will entail the repayment of debts however large.[7] [The liability] cannot be limited to [the receipt

[1] Vír. l. 106, p. 2; Kám. and Vya. M.

[2] Vir. l. 106, p. 1; Vya. M. and Kam. The Mit. considers a gift to jugglers, singers, and dancers, wrestlers, quacks, spirit sellers, as "idle promises."

[3] Vír. l. 106, p. 1.

[4] According to Vír. debts for wines and spirits are improper debts (l. 106, p. 1); Mit. ch. ii., l. 20, p. 1; and Kam.

[5] Vír. l. 106, p. 2; Kam. and Vya. M.

[6] This passage stripped of its verbosity means that absence of heritage is possible, either on account of a disqualification in the heir, or on account of the father's property, if he left any, having unjustly passed into other hands.

[7] This seems to be inequitable; and is not supported by the Mitákshará and other authorities. As regards the Bombay Presidency Mr. White's Act (Bombay Act VII. of 1866) has now settled the question.

of] equal or larger assets.* Another meaning of the last *páda*
* ७२ (quarter of the verse) is that in the case of a sonless creditor, his heirs, who succeed to his estate, such as the wife, the daughter, and the rest, may recover [the debts] from the debtors of their husbands, and the like [respectively]. Vishṇu [says]:—"The debts [of a deceased], whether with or without a son, shall be paid by the receiver of assets."[1] Bṛihaspati [says]:—"In the absence of a receiver of assets, he who takes the wife would be similarly [made to pay]."[2] Kátyáyana [says]:—"The son shall be made to pay the debts [of his
10 father] when he is not afflicted [with any disease], is solvent and of age; but not otherwise. The taker of the assets shall first [be made to] pay; after him the son; in the absence of a son, or in the case of the son being indigent, the taker of the wife."[3] Nárada [says]:—"If the wife with the [family] wealth and her offspring should seek [the protection of] a stranger, he should pay the debts of her husband, or else give her up."[4] Kátyáyana [says]:—"The debt [contracted] by drunkards and the like having no wealth or issue, shall be paid by the paramours of their wives." Nárada [says]:—"Of the successor to the wealth, the taker of the wife,
20 and a son, he who takes the wealth shall pay debts. The son [shall pay] in the absence of the takers of the wealth or the wife; and the taker of the wife in the absence of a successor to the wealth or a son."[5] The meaning of the last *Páda* (quarter) is that the taker of the wife shall pay the debt in the absence of the successor to the wealth and of a son; as [mentioned] in the aforesaid text of Yájñavalkya. Kátyáyana [says]:—"Bhṛigu says that debts contracted for family [purposes], though without authority, by the slave, wife, mother, pupil, or son of one who has gone on a distant journey, shall be paid." Yájñavalkya [ch. ii., v. 46]:—"A woman need not pay the debts of her hus-
30 band or son; nor the father those of his son, nor the husband those of his wife, unless contracted on account of the family."[6] Kátyáyana [says]:—"That which has been promised or accepted [by ratification]."[7] Nárada [says]:—"The debt contracted by a son in distress shall be paid by the father."[8] Yájñavalkya [ch. ii., v. 48]:—"Among herdsmen, vintners, dancers, washermen, and hunters, the husband shall pay the debts of his wife; because his livelihood depends upon her."[9] The same [ch. ii., v. 49]:—"A woman shall pay the debts agreed to by her, or contracted by her jointly with the husband, or by herself alone; she shall pay no other debts."[10] A

40 [1] Vír. l. 106, p. 2 [2] Vír. l. 106, p. 2. [3] Vír. l. 103, p. 2.
[4] Vír. l. 107, p. 2; Vya. M.; and Kam. [5] Vír. l. 108, p. 1; Kam. and Vya. M.
[6] Vír. l. 109, p. 1; Vya. M. [7] Vír. l. 109, p. 1. [8] Vír. l. 109, p. 1.
[9] Vír. l. 109, p. 2. [10] Vír. l. 109, p. 2.

woman taking the heritage shall pay [even those] debts [that have not been] agreed to [by her]; [for] Kátyáyana [says]:—"A wife who has been addressed by her dying husband [thus:—] 'you shall pay [my] debts,' shall be made to pay, though unwilling, if she has wealth with her."[1] Nárada [says]:—"If a woman having male issue, but no property, forsakes her son, and lives with another, her son shall pay all her debts."[2] This refers to [the case of] a son who has obtained an inheritance.[3] Nárada [says]:—"A debt contracted for the family, before partition by a father's brother, brother, or mother, shall be paid by all the co-parceners."[4] Nárada says in regard to the payment of debts where the creditor and his sons or the like do not exist:—"Where a Bráhmaṇa[5] creditor as also his descendants are no more, the debts due to him should be paid to *Sakulyás* (persons of the same *gotra* or *gens*), and in their absence to the *Bándhavas*[6] (cognates). If neither *Sakulyas* nor *Bándhavas* exist, then [it] should be paid to Bráhmaṇas, and in their absence, it should be thrown into the water." Prajápati also [says]:—"On failure of the Bandhus, [the debts] should be given to Bráhmaṇas, or should be thrown into the water. [For] what has been thrown into the water or fire serves [the thrower] in the next world."[7] When after [the amount of] a debt has been thrown into the water or the like, the creditor returns, he shall of course have [his due].

* ७३ * OF DEPOSITS.

[*Nikshepa.*]

Nárada [says]:—"Where one bails his goods to another in confidence [and] without suspicion, that is termed by the wise a *Nikshepa* (deposit), [which is] a head of law. That is said to be an *Upanidhi*, which is made over uncounted, unseen, and under seal, and that *Nikshepa* [which is made over] after describing it."[8] Bṛihaspati [says]:—"The merit of preserving a deposit is the same as that of giving gold, inferior metals, or clothes, or of protecting one who beseeches protection. The very thing bailed should be returned to the very bailor and in the same manner [as bailed]; it should not be handed over to a near kinsman [of the bailor]."[9] *Nyása* [means] a deposit. *Pratyanantara* is a near kinsman of the bailor.

[1] Víramitrodaya l. 109, p. 2, makes this text clearer. [2] Vír. l. 109, p. 2.
[3] Not from her, but apparently from the father. [4] Vír. l. 110, p. 1.
[5] The word Bráhmaṇa in the text is illustrative of every creditor: see Víramitrodaya, l. 110, p. 1.
[6] The term Bándhava is not here used in its technical sense, because the mother's brother (who is not one of the technical *Bandhus*) is included in this text by the Víramitrodaya l. 110, p. 1.
[7] Vír. l. 110, p. 1. [8] Mit. ch. ii., l. 46, p. 1; Vír. l. 111, p. 2; Kam. and Vya. M.
[9] Vír. l. 112, p. 1; Vya. M. and Kam.

Manu [ch. viii., v. 191] :—"He who restores not a deposit, or he who demands what was not bailed, shall both be punished like thieves, or shall be made to pay a sum equal [to the sum bailed]."[1] Bṛihaspati [says]:—"If the bailee destroy the deposit owing to his particular negligence, or refuse to return it on demand, he shall be made to pay that [*i. e.* its value] with interest."[2] *Bheda* means [difference in the] care [bestowed] upon his own property [and a deposit]. Hence no blame of negligence attaches to the destruction [of the deposit] [if] along with that, bailee's property should be destroyed. Yájñavalkya [ch. ii., v. 67]:—"[The bailee] making his living without authority [by the use of the deposit] shall be punished, and made to pay it with interest."[3] *Ájívan* means [one] living by using [it], or letting it out at interest. *Udaya* [means] interest, in regard to which Kátyáyana mentions a special rule :—"A deposit, the balance of interest, [the commodity] sold, and [the price of] a thing purchased, not being paid on demand, shall bear interest at five per cent."[4] Manu [ch. viii., v. 192]:—"The king shall fine a depositary of a *Nikshepa* (an ascertained deposit), in a sum equal [to the value of the deposit], much more so that of an *upanidhi* (an unascertained deposit), if he should deny the deposit."[5] Bṛihaspati [says]:—"There is no fault [of the depositary] if the deposit be destroyed along with [some] effects [of the depositary] by the act of God or the king."[6] Yájñavalkya [ch. ii., v. 66] :—"That which has been removed by [an act of] the king, or God, or thieves, shall not be caused to be restored."[7] Manu [ch. viii., v. 186]:—"He who, by his own free act, restores [a deposit] to the next [kinsman] of the deceased, shall not be harassed by the king or by the kinsmen of the bailor." *Pratyanantara* [means] the nearest. The meaning is "he shall not be harassed with a demand of more in the absence of proof." Bṛihaspati dictates the whole of this law of deposits in regard to other [transactions] :—"This same law applies in the case of *Anváhita* (a bailment for delivery), *yáchitaka* (a loan for use), a bailment with an artist, a pledge, and a person surrendering himself for protection."[8] *Anváhita* is [something] handed over to another after saying 'a particular person deposited this with me ; and you shall deliver this to him.' *Yáchita* is an ornament or the like borrowed on occasions of marriage or such other [ceremony] for show. *Silpinyása* is [something] made over to a goldsmith or the like for [being made into] an earring or the like. Nárada also [says]:—"This same law is laid

[1] Vír. l. 113, p. 1. [2] Vír. l. 112, p. 2; Kam. and Vya. M.
[3] Vír. l. 112, p. 2; Kam. and Vya. M.
[4] Mit. ch. ii., l. 26, p. 2; Vír. l. 112, p. 2; Kam. and Vya. M.
[5] Vír. l. 113, p. 1 ; and Vya. M. [6] Vír. l. 112, p. 1 ; and Vya. M.
[7] Vír. l. 112, p. 1 ; and Kam. [8] Vír. l. 114, p. 1 ; and Vya. M.

down in the cases of *Yáchita, Anváhita,* a deposit with artists, a *Nyása* (bailment), and *Pratinyása* (a rebailment)."[1] *Pratinyása* is bailment of an object which itself was bailed by the owner. Kátyáyana ordains the restoration [of a deposit] by an artizan, in some cases, even when it has been destroyed by an act of God or the king:—"An artizan who [having undertaken] to prepare [a thing] by a certain time, keeps it beyond that time, shall be made to restore his deposit even if destroyed by an act of God or the king."[2] Nárada [says]:—"A garment when once washed loses one-eighth of its value, when washed twice one-fourth, when washed thrice one-third, and
* ৬৪. when washed four times one-half of its value.* After half the value is lost, one-fourth of the value will be reduced [for every further washing]."[3] Yájñavalkya [ch. ii., v. 238]:—"A washerman wearing the garments of another shall be fined three *Paṇás*; and in cases of a sale, hiring out, pledge, or a loan on request, [shall be fined] ten *Paṇás*."[4] *Avakraya* is a loan to another on hire. *Ádhánam* is pledging. The same [author] states the rule about the reduction of metals other than gold, when heated in fire [ch. ii., v. 178]:—"Gold is not reduced by fire; silver loses two *palas* in the hundred; tin and lead, eight; copper, five; iron, ten."[5] In the case of a loss to a greater extent of silver or other metals, the goldsmith or a similar artizan should be punished. The same [author] speaks of an increase [in weight] when yarn has been supplied to workmen [ch. ii., v. 179]:—"In the case of woollen and cotton yarns the increase is ten *palas* in the hundred; [so] in [cloth of] middling quality, five; and in [cloths of] fine quality, three [*palas*]."[6] The same author speaks of reduction in certain cases [ch. ii., v. 180]:—"A reduction of a thirtieth part is allowed in embroidered cloths and cloths made of hair. There is neither an increase nor a decrease in the case of silken cloths or barks."[7] *Kármika* means a cloth upon which figures like the *Svastika* are worked by different yarns.[8] The same [author] speaks of the freedom from blame of an artizan in the case of loss or refusal to return, the bailment on demand before the stipulated time.[9] "In the case of [loans taken] for a particular purpose or [for a particular] time, if a demand is made before the proper time, and [the deposit] is not returned [accordingly], [the bailee]

[1] Mit. ch. ii., l. 27, p. 1; Vír. l. 114, p. 1; and Vya. M. Both the Mitákshara and the Víramitrodaya interpret *Pratinyása* as a mutual bailment.
[2] Vír. l. 114, p. 1. [3] Vír. l. 115, p. 1 and Vya. M. [4] Vír. l. 115, p. 1.
[5] Vír. l. 115, p. 1; Kam. and Vya. M. [6] Vír. l. 115, p. 1; Kam.
[7] Vír. l. 115, p. 1; Kam.
[8] Vijñáneśvara (Mit. ch. ii., l. 72, p. 1) adds 'colored' before 'yarns.'
[9] Vír. l. 114, p. 2, refers this to *Yáchitaka* and not to *Śilpinyása*, and both Kamalákara and Mádhava agree with this view.

shall not be compelled to restore [it]."[1] The reverse of this is laid down by the same [author]:—"A bailee who does not restore [the deposit] even on demand after the purpose has been served, or the [stipulated] time has expired, shall pay the value [of the deposit] if it is lost or taken away."[2] The same author [says]:—"He who having obtained a loan for use does not restore it on demand, shall be compelled to return it, and fined if he does not do so."[3]

---

## SALE WITHOUT OWNERSHIP.

[*Asvámi-vikraya.*]

Vyása:—"When the wealth of another, whether borrowed for use, bailed for delivery, or stolen, is sold in the owner's absence, that [sale] is a sale without ownership." Kátyáyana:—"A sale, a gift, or a pledge made without ownership should be rescinded."[4] *Asvámi*, without an owner, is a word by itself and is an adverb. Nárada:—"An open purchase by a purchaser is pure; a purchase made in secret is a theft. A purchase made from a slave who has no authority from his master, or secretly from a bad man, [or] at a very low price, [or] at an unusual hour, becomes affected by that contamination."[5] *Taddoshah* (that contamination) [meaning] the thief's contamination. Yájñavalkya [ch. ii., v. 171]:—"Proof of a thing lost [or stolen] must be made [by the owner] by evidence of title or by possession; otherwise on failure of proof, he should pay the king a fine equal to a fifth part."[6]

*Panchabandha* [means]* a fifth share of the lost property.

* ৷৷ When the evidence given by the witnesses adduced by the loser is contrary to his claim, he should be fined in double the amount of the lost property, as Vyása says:—"If the plaintiff prove not his lost thing by witnesses, he should be compelled to pay twice its value as fine, and the purchaser is entitled to the thing."[7] He also lays down the course to be pursued by the purchaser:—"If the seller is produced, the purchaser is by no means to be condemned, for then litigation is [to be carried on] between the owner of the thing lost and the seller."[8] Brihaspati:—"When the seller has been produced and has been condemned in the law-suit, he should [be made to] pay the price to the buyer and a fine to the king, and to

[1] Vír. l. 114, p. 2; Kam. and Vya. M.; Vír. and Mádhava refer this to Kátyáyana.
[2] Vír. l. 114, p. 1; Kam. and Vya. M.; where this is referred to Kátyáyana.
[3] Vír. l. 114, p. 2; where this is referred to Kátyáyana.
[4] Vír. l. 115, p. 2. [5] Vír. l. 115, p. 2; Kam.; Mit. ch. ii., l. 69, p. 1.
[6] Vír. l. 116, p. 2; Kam. and Vya. M. [7] Vír. l. 116, p. 2; Kam.
[8] Vír. l. 117, p. 1; Vya. M.; Mit. ch. ii., l. 62, p. 2; where Vijñáneśvara refers this to Brihaspati.

restore the property to its owner."[1] Kátyáyana:—"Let time be given to the buyer for the production of the seller according to the length of the road;[2] if the seller cannot be produced, the buyer should be made to justify the purchase. If the purchase is justified, he [the purchaser] should in no wise be blamed by the king. The claimant should first prove his property by evidence of kinsmen; next, to clear himself, the buyer should prove a fair purchase by his kinsmen."[3]

Even if the purchaser clearly prove the sale, still the property does revert to the person who lost it. And so Manu [ch. viii., v. 202]:—"Now if the vendor be not producible, and if [the sale be justified by the vendee] as an open sale, the latter should be dismissed by the king without punishment; and the property reverts[4] to the person who lost it."[5] *Anáhárya*, not having been made to appear. The meaning is that the thing [is] justified by an open sale. Kátyáyana:—"The defendant not producing the seller, nor even establishing an open sale, the thing claimed should be caused to be delivered to the claimant, and the seller should be made to pay a fine."[6] Bṛihaspati:—"If a purchase be made from an assembly of traders with the knowledge of the king's officers, or from a seller whose dwelling-place is unknown, or where the seller is dead, the owner of the thing may recover it on paying half the price given. In such a case half the value must be lost to each of them from legal considerations."[7] Maríchi:—"But where the seller cannot be found, his dwelling place being unknown, the loss should be borne equally by the buyer and by the owner who has lost the thing."[8] *Niveśa* [means] the residence of the vendor. Nárada:—"What is permitted, whether women, beasts or the earth, that only should be enjoyed. He who enjoys them without leave, should be made to pay the profit of such enjoyment."[9] *Uddishṭam* [means] permitted. *Bhukta-bhogam* [means] profit arising out of enjoyment. Yájñavalkya [ch. ii., v. 173]:—"The owner of a thing lost or stolen, which had been found by customs-officers or watchmen, shall take it [if claimed] within one year, after which the king shall retain it."[10] As to this [says] Manu [ch. viii., v. 30]:—"The king should cause to be detained, for three years, property of which no owner appears."[11] After three years, the owner [if found out] can take it away.

[1] Vír. l. 117, p. 1; Kam. and Vya. M.

[2] Vír. l. 117, p. 2; Mit. ch. ii., l. 117, p. 1. Vijñánésvara refers this to Gautama; Kam. attributes this to Bṛihaspati.

[3] Mit. ch. ii., l. 69, p. 2; Vír. l. 117, p. 1; Vya. M.; Kam.

[4] On paying the vendee half its value; see Kullúka on Manu.

[5] Vír. l. 117, p. 2; Kam. and Vya. M. [6] Vír. l. 117, p 2; Kam.

[7] Vír. l. 117, p. 2; Vya. M.; these attribute these two couplets to Kátyáyana.

[8] Vír. l. 117, p. 2; Kam. [9] Vír. l. 118, p. 1; Kam. and Vya. M.

[10] Vír. l. 118, p. 1. [11] Kullúka adds: "after a proclamation is given."

After [three years, if the owner is not found out] the king may retain it."[1] This has reference to property of which a *Śrotriya* (one conversant in the Vedas) is the owner. The same [ch. viii., v. 33]:—"The king remembering the duty of the righteous may take a sixth, or a tenth, or a twelfth part of the property which had been lost and found."[2] Here, in the first year, he should give up the whole of the property; in the second year, he should give it up, after retaining a twelfth part; in the third year, a tenth; in the fourth and the rest, a sixth.*

* ৬ξ *After which the king shall retain it,* this only refers to an injunction to expend it in case its owner does not appear within three years; but if the owner appear, it must be returned to him, even if expended; thus says the Mitákshará. This, however, only if the owner be unknown; for if it be known 'that such an one went away forgetfully leaving the said property behind,' then he shall get it back even after three years. Even the king has no right to spend it; but he should take a certain portion as his share.

Yájñavalkya speaks of the remuneration to the keeper for protecting for a day the stray animals of another found [by him] [ch. ii., v. 174]:—"The owner of stray animals must pay four *paṇas,* if the animal be of the species with single hoofs; five *paṇas* for human beings; two for every buffalo, camel, cow, or animal with cloven hoofs; but only a fourth for every goat or sheep." But their food must be paid for besides.

On the subject of *nidhi* (treasure-trove) Yájñavalkya says:—[ch. ii., vv. 34, 35]:—"The king having found treasure-trove, should give half to the twice-born;[3] but a learned Bráhmaṇa [finding treasure-trove] may keep the whole, for he is lord of all. [34.] The king should receive a sixth part of treasure-trove found by any other person. In case where information is not given by the finder, he [the finder] must be made to pay a fine [in addition to the king's share]."[4] If however any one prove by mark, measure, or otherwise, that the property found belongs to himself, in that case the king should deliver it to him after giving a twelfth part to the finder, and taking a sixth himself. This is stated by Manu [ch. viii., v. 35]:—"When a man claims treasure-trove, declaring truly, 'This is my own property,' the king should still retain his sixth share and also a twelfth." The twelfth being taken to be given to the finder. On the subject of property carried off by thieves the same author says [ch. viii., v. 40]:—"Let property carried off by thieves be restored by the king to the owner of whatever class he may be; if the king appropriate it, the sin

[1] Vír. l. 118, p. 1; Mit. ch. ii., l. 70, p. 1; Kam. [2] Mit. ch. ii., l. 70, p. 2.
[3] The Mitákshará reads twice-born as Bráhmaṇás, l. 16, p. 2.
[4] Mit. l. 16, p. 2.

of the thief is visited on him."[1] In case he be unable to recover it [from the thieves], Krishṇa Dvaipáyana (Vyása) says:—"Should the king be unable to recover stolen property from thieves, he shall make it good from his own treasury, if he be powerless [to recover it]."[2] End of section [entitled] 'Sale without Ownership.'

## CONCERNS AMONG PARTNERS.

(*Sambhúya-samutthánam.*)

Nárada:—"Where traders or others jointly carry on business, it is called a 'concern among partners,' a title of judicial procedure."[3] Bṛihaspati:—"Whatever property a man may lend with the assent of many, or whatever business[4] [transaction] he may cause to be performed is [considered] as the act of all [partners]. They are themselves declared [to be] competent arbitrators and witnesses for each other in doubtful cases, and in cases of deceit, provided they bear no enmity to either party. Should one of the partners be discovered to be fraudulent in buying or selling, he too is to be cleared by [the ordeal of] an oath; such is the rule in all [such] controversies."[5] Yájñavalkya [ch. ii., vv. 265, 260]:—"A man of crooked ways should be expelled [by the other partners] without profit; a partner unable to act may appoint another man to act for him [265]. If a partner does what the others forbid or disapprove of, or if he injures common property by his negligence, he should make good the damage, but he who preserves it from [robbers or other] misfortune, should receive a tenth part of it [as his reward]"[6] [260]. Kátyáyana:—"If four kinds of artizans be jointly employed, [viz.,] young apprentices, experienced scholars, good artists,* and teachers, they shall receive in order [respectively] one share, two, three, and four shares of the pay or profit."[7] *Sishyakáh*, young apprentices; *Abhijñáh*, experienced scholars, those well versed in arts; *kuśaláh*, thoroughly skilled [in every branch]; *Ácharyáh*, teachers introducing new modes or inventions. Bṛihaspati:—"Where several men jointly build a house, or a temple, or a cistern with flight of steps, or make sacred utensils, the chief workman should receive a double share [of the pay]."[8] The same [adds]:—"This rule has been declared by the wise for a band of musicians; he who knows how to keep time, should take a share and a

* ৩৩

[1] Mit. ch. ii., l. 17, p. 2.
[2] Mit. ch. ii., l. 17, p. 1.
[3] Vír. l. 118, p. 1; Kam. and Vya. M.
[4] Execution of documents, &c. Víramitrodaya, l. 118, p. 2.
[5] Vír. l. 118, p. 2; Kam. and Vya. M.
[6] Vír. l. 119, p. 1.
[7] Vír. l. 120, p. 2; Kam. and Vya. M.
[8] Vír. l. 120, p. 2; and Kam.

half; and the singers should have equal shares."[1] Kátyáyana :—"If men [who have joined together in any business], but are dispersed abroad, meet with imprisonment, then whatever is paid for their liberation, shall be borne by them according to the share of each. The laws before propounded, relate to all partners, whether merchants, husbandmen, robbers,[2] or artizans, when they have made no special agreement for their shares."[3] End of 'Concerns among Partners.'

## RESUMPTION OF GIFT.

*(Dattápradánikam.)*

Nárada:—"When a man, having unduly given a thing, desires to take it back, it is called *Resumption of Gift*, which is a title of judicial procedure."[4] *Asamyak* (unduly) is an adverb, [and] means in a prohibited [mode]. The same [says]:—"In civil affairs, the law of gift is fourfold, what may be given, or what may not be given, and what is a valid gift, or is not a valid gift. What is bailed for delivery, what is borrowed for use, a pledge, joint property, a deposit, a son, a wife, and the whole estate of a man who has issue living, the sages have declared unalienable, as also what has been promised to another."[5] Here as a man has no property in his wife or son, the express prohibition of a gift of them is only explanatory [like the Vedik text], 'neither in the middle region nor skies nor in the heavens.'[6] Thus the exception stated by Yájñavalkya in the text [ch. ii., v. 175]:—"Without causing detriment to the family property [everything] may be given except a wife and son,"[7] is also explained. The non-existence of property in a wife or son has been already explained in discussing the subject of ownership.

In making gift of these things not only will the act be untenable in law, but penance also must be performed, as says Daksha in reference to these things. "The man who gives [them] away is a fool and must expiate the sin by penance."[8] Manu:—"He who receives what may not be given, and he who gives it away, shall both be punished like thieves, and both be caused to pay the highest fine."[9] What may be given is [thus]

[1] Kam.; and Vír. l. 120, p. 2.

[2] Another verse of Kátyáyana quoted in the Víramitrodaya (l. 120, p. 2) describes these as persons commissioned by the king to plunder the enemy's country.

[3] Vír. l. 121, p. 1; and Kam.

[4] Mit. ch. ii., l. 70, p. 2; Vír. l. 121, p. 1; and Kam.

[5] Id.

[6] Taittiríya Samhitá, *Kánda* v., *Adhyáya* ii., *Anuváka* 7. [7] Vya. M.

[8] Vír. l. 121, p. 2.

[9] Vír. l. 121, p. 2; Kam. and Vya. M. All these works refer this text to Manu, although it is not found in all the editions of Manu consulted by me.

declared by Bṛihaspati:—"What remains after the food and clothing of the family [have been provided for] may be given."[1] Kátyáyana declares what must be given without fail:—"He who having voluntarily promised a present to a Bráhmaṇa does not deliver it, should be compelled to pay it as a debt, and should be mulcted in the lowest fine."[2] Gautama:—"A man should not give even what he has promised, to a person not following the duties of life."[3] Gift or sale of a *Vṛitti*[4] is thus forbidden by Vyása:—"They who are born or yet unbegotten, and they who are still in the womb, wish for means of livelihood: no gift or sale [of a *Vritti*] should therefore be made."[5] Nárada thus distinguishes between valid and void gifts:—"Valid gifts are said to be of seven kinds,* and void ones of sixteen. They who know the law of gifts declare that [1] the price of purchased goods, [2] wages, [3] a present made after being pleased [with poets, musicians, &c.], [4] [a present] proceeding from natural affection, [5] [or] from gratitude, [6] a nuptial gift [to the brother of the bride], and [7] a gift for merit, cannot be resumed."[6] *Anugrahah* [means] *dharma* or religious purposes. What was given through pain of [1] fear, [2] anger, [3] or intense grief; so also [4] a bribe, [5] what was given in jest, or [6] by mistake, or [7] through fraud, what was bestowed by [8] a minor, [9] an idiot, [10] a person under duress, [11] a diseased person, [12] an intoxicated person, [13] an insane person, or [14] made in consideration that the donee will do some service, [but which has not been performed], [15] what was given through ignorance to a bad man who pretended to be good, and [16] for an undertaking said to be righteous; [these gifts] are declared as not given [or void]."[7] *Ruk* [means] pain. The construction is pain caused by *fear*, &c. The meaning is what was given by one oppressed by fear of being beaten or the like; in the same manner what was given [to others] through anger against brothers and such other persons, [in order that the latter may be deprived thereof]. *Vyatyása* [means] mistake; as when gold is given, while the intention was to give silver. *Chhalayoga*, practising fraud—such as if the king intended to give a cow to *Devadatta* and it was given to another who had personated *Devadatta*, even though the latter may have been a deserving person. *Árttah*, one whose mind is unsettled by disease. *Mattah*, inebriated with some intoxicating drug. *Unmattah*, affected by wind in the

* ৬৫

[1] Vír. l. 121, p. 2; Kam. and Vya. M.

[2] Vír. l. 122, p. 2; and Kam. [3] Kam.

[4] Literally livelihood; but now it is applied to offices or callings which give livelihood to families: *e. g.*, the office of a village astrologer or *gráma-jośi*.

[5] Vír. l. 122, p. 1; Kam. and Vya. M.

[6] Mit. ch. ii., l. 71, p. 1; Vír. l. 122, p. 2; Kam. and Vya. M.

[7] Mit. ch. ii., l. 71, p. 1; Vír. l. 123, p. 1; Kam. and Vya. M.

head or delirium. *Apavarjitam* [means] given. A gift made to one who fails to do the work which the donor thought he would do; a gift made to one practising sinful arts under the belief that he will perform a righteous act; these gifts revert [to the donor]. Kátyáyana:—"What was given by men through lust or anger, or by one not his own master, or by one diseased, or deprived of virility, or by one inebriated, or of unsound mind, may be taken back in order that the effects of mistake may be averted."[1] *Kámát*, in order to seduce another's wife. *Klíbah*, frightened [into unmanliness]. *Vyatyása*, &c. what was given as a bribe for preventing the effects of a mistake. That *Utkocha* [or bribe] which is promised to be given for the accomplishment of any object, should not be given even if that object be accomplished. But if it have already been actually given, it should be restored by force, and a fine equal to eleven times [its value] should be inflicted according to the followers of Garga."[2] The same author explains the nature of *utkocha* (a bribe):—"Whatever is received for withholding information of a thief, a felon, a man violating the rules of his class, and an adulterer; for secreting a wicked man, or by threatening to denounce a man by giving false testimony against him, is denominated *utkocha* (bribe)."[3]

Manu [ch. viii., v. 165]:—"When [the judge] discovers fraud in a pledge or sale, a gift or acceptance, or in any [other transaction] whatever, he should annul the whole transaction."[4] *Yoga* [means] fraud. In whatever other transaction the taint of fraud is discovered, all that should be reversed; this is the meaning. Kátyáyana:—"If a gift be promised by a person whether in health or in sickness, for a religious purpose, and he die without making it, his son should be compelled to make it; of this there is no doubt."[5] Further explanation of this subject may be found by referring to the *Dvaitanirṇaya* by my revered father. End of *Dattápradánikam*.

---

## BREACH OF A SERVICE-CONTRACT.

### (*Abhyupetyáśuśrúshá.*)

Contracted service unperformed.

Nárada:—"When a man does not render service according to agreement, the title of that judicial proceeding is called Breach of a Service-Contract."[6] Servants, says Bṛihaspati, are of three kinds:—"[1] The soldier is pronounced the highest of servants; [2]

---

[1] Vír. l. 123, p. 2; Kam. and Vya. M.
[2] Vír. l. 123, p. 2; Kam. and Vya. M.
[3] Id.
[4] Vír. l. 123, p. 2; and Vya. M.
[5] Vír. l. 123, p. 2; Kam. and Vya. M.
[6] Mit. ch. ii., l. 72, p. 2; Vír. l. 123, p. 2; Kam. and Vya. M.

the agriculturist, the middlemost; [3] the porter is declared the lowest; and so is [4] a person employed in household work."[1] Nárada:—"He who shall be appointed to do all business, or to look after the household,* should be considered an appointed servant. He is also called the [head] family servant."[2]

Kátyáyana:—"According to Bhrigu, one who is free, by giving himself becomes a slave like a wife. Slavery should be known as [limited] to three classes, never can a Bráhmaṇa become a slave. The servitude of men of the military, commercial, and servile classes who give up their freedom, is [to be] in the direct, not in the inverse order of the classes."[3] Nárada:—"In the inverse order of the classes, slavery is not ordained."[4] Kátyáyana:—"When men of the three twice-born classes forsake the fourth order [proper to the twice-born], [the king] should banish a man of the [sacerdotal class], and reduce to slavery a man of the Kshatriya [or military] class, as Bhrigu says."[5] The use of the term 'Kshatra' is intended to include the Vaiśya and Śúdra[6] classes.

Daksha and Nárada relate the method of banishing a Bráhmaṇa:—"He, who having entered on the fourth order [called *Sanyása*] does not abide by its duties, should be instantly banished by the king with the mark of a dog's foot."[7] Kátyáyana:—"But even a man of equal class must not reduce a Bráhmaṇa to slavery; a mild and learned man may indeed employ in labour one inferior to himself in qualities; but the highest twice-born man should not perform even the slightest impure work."[8] Manu [ch. viii., v. 411]:—"Both him of the military and him of the commercial class if distressed for a livelihood, a Bráhmaṇa should support, making them perform without harshness some work appropriate to them."[9] *Svámi-Karma*, meaning some respectable work as may be suited [to their class]. Kátyáyana:—"He who takes a Bráhmaṇa woman, and he who sells her, should be punished by the

---

[1] Mit. ch. ii., l. 72, p. 2; Vír. l. 125, p. 1; Kam. and Vya. M. The fourth quarter of this verse as quoted by the above works except the Víramitrodaya is इत्येवं त्रिविधो भृतः (Thus is a servant of three kinds.) The reading in the Mayúka and the Víramitrodaya is तथाच गृहकर्मकृत् (as also one doing household work).

[2] Vír. l. 125, p. 1; and Kam. [3] Vír. l. 125, p. 1; and Vya. M.

[4] Vír. l. 125, p. 2; and Mit. ch. ii., l. 73, p. 2.

[5] Vír. l. 125, p. 2; Kam. and Vya. M. The Víramitrodaya reads क्षत्रविड्भृतः at the end of the verse, thereby bringing the Vaiśya within the scope of the text.

[6] The extension of the term *Kshatriya* to a Śúdra is unnecessary and improper, the latter being incapable of entering the fourth order.

[7] Vír. l. 125, p. 2; and Vya. M. [8] Vír. l. 125, p. 2.

[9] Vír. l. 126, p. 1; and Vya. M. The fourth quarter of this verse as found in the different editions of Manu and the gloss of Kulúka is स्वानि कर्माणि कारयन् (making [them] do their legitimate work). The reading of the Víramitrodaya is स्वामी कर्माणि कारयन् (the master making [them] work).

king who should annul what they may have done. He who impelled by lust should enslave a woman of [good] family [who went to him] for refuge, or cause her to go to another [for a like purpose], shall be punished, and his act shall be made void. He who treats as a slave the nurse of an infant child, or one not[1] a nurse, or the wife of his dependant should be mulcted in the lowest fine."[2] Vishṇu:—"He who employs one of the highest class in slavish work shall be fined in the highest amercement."[3] Kátyáyana:—"He who not being in distress and able [to maintain her], wishes to sell a devoted female slave [resisting the sale] by her cries, shall be fined in the lowest amercement."[4]

Nárada enumerates the different kinds of slaves:—"The home-born; one bought; one received [by gift]; one received by inheritance; one maintained in a time of famine; and likewise one pledged by a [former] master; one released from a heavy debt; one made captive in war; one won in a stake; one who comes [forward], saying 'I am thine'; an apostate from religious asceticism; one who has become slave for a stipulated time; one [who has become] a slave [merely] for maintenance; one enamoured of a *vaḍavá* (domestic female slave), *i.e.* he [who has become a slave by marrying her]; and one who has sold himself. These are the fifteen kinds of slaves declared by law. Of these the first four cannot be released from slavery except at the pleasure of their masters, [for] their servitude has come by descent. That human wretch who, being independent, sells himself, is the vilest of [them] all. He also cannot be released from slavery. Of all these, whoever rescues his master from imminent danger to his life, should be released from slavery, and should receive the share of a son."[5] Yájñavalkya [ch. ii., v. 183]:—"He who having become a *Sannyási* (a religious ascetic) falls from that order, shall become the slave of the king for life."[6] Nárada:—"One maintained in a time of famine shall be released* from slavery on giving a pair of oxen. One pledged shall be also released when his master redeems him by discharging the debt. On paying a debt with interest, a debtor is released from slavery. He who has become slave by saying, 'I am thine,' one made captive in war, and he who was won in a stake, are emancipated on giving a substitute who will do

* ∠o

---

[1] The Mayúkha uses the word *adhátrim*, one not a nurse, but the Víramitrodaya uses *adásîm* (l. 127, p. 2), not a slave, but a free woman.

[2] Vír. l. 127, p. 2; and Kam. [3] Vír. l. 127, p. 2; and Kam.

[4] Víramitrodaya (l. 127, p. 2) prescribes a fine of 200 *paṇas* for the offence.

[5] Mit. ch. ii., l. 72, p. 2; Vír. l. 126, p. 1; and Kam.

[6] The Mitákshará adds "if he makes no penance," l. 73, p. 2; see Vír. l. 126, p. 2; Kam. and Vya. M.

some work.[1] One [who has become] a slave for a stipulated time, is released when that time is over; one who has become a slave for maintenance is released immediately on giving up subsistence; one captivated by a *vaḍavá* (a domestic female slave) is freed from slavery on his giving up connexion with her."[2] *Pratisírsha* [means] a substitute or a deputy. *Vaḍavá* means a *dási* or a domestic female slave. Yájñavalkya [ch. ii., v. 182] :—"One enslaved by force, and also one sold by robbers, are released [from slavery]."[3] Nárada:—"He who being not his own master gives himself up [to another], saying, 'I am thine,' does not obtain his wish; [for] the former owner can reclaim him."[4] *Asvatantrah*, one who is the slave of another. In this section the word slave not being expressly confined to the masculine gender, all these rules should throughout be understood as applying to female slaves also.

Kátyáyana states a reason for enfranchising female slaves:—"If a man approach his own female slave, and she bear him issue in consequence, she should, in consideration of the seed, be enfranchised with the child."[5] *Bíjam* [means] seed or offspring of good qualities. Nárada:—"He who pleased at heart, wishes to emancipate his own slave, should take a jar of water from his [slave's] shoulders, break it when full of water, and sprinkle the water with rice and flowers on his head; and having pronounced him free three times, he should then dismiss him with his face turned towards the east. Thenceforward he should be said to be cherished by his master's favour; his food is fit to be eaten, his gifts fit to be accepted, and himself is fit to be respected by worthy people."[6] Kátyáyana:—"A female who is not a slave, if married by a slave, becomes a slave, for her husband is her lord; and that lord is subject to his master. Whatever property belongs to a slave, his master is declared to have dominion over it."[7] End of Breach of Service under a Contract.

## NON-PAYMENT OF WAGES.

[*Vetanádánam.*]

Nárada:—"A series of rules are now stated for the payment and non-payment of the wages of servants, called in law, 'Non-payment of

[1] The term is *alpa-karmaṇá* [a substitute who will do] some little work; but the Víramitrodaya reads *tulya-karmaṇá*, one who will do equal work (l. 126, p. 2), and the latter appears to be more correct.

[2] Vír. l. 126, p. 2; and Kam.

[3] Vír. l. 127, p. 1; and Kam.

[4] Vír. l. 127, p. 1; and Vya. M.

[5] Vír. l. 127, p. 1; and Kam.

[6] Mit. ch. ii., l. 73, p. 1; Vír. l. 127, p. 1; Kam. and Vya. M.

[7] Kam.; Vír. l. 127, p. 2.

wages."[1] Yájñavalkya [ch. ii., v. 194]:—"He who without settling the wages employs another to work, should be compelled by the king to pay him a tenth part of the [profit arising from] trade, beasts, or grain."[2] This relates to light work; but as regards heavy work [says] Bṛihaspati:—"A ploughman should take a third or a fifth part [of the grain]; if provided with boiled-rice and raiment he should take a fifth part; if not so provided, he should take a third part of the produce."[3] *Bhaktâ chchháda-bhṛitah*, maintained by [giving] boiled rice and clothes. Nárada:—"He who having undertaken a work does not perform it, should be forced to do it, his wages being paid; he who having received wages does not perform [the work], should be caused to pay twice the amount."[4] Manu [ch. viii., v. 215]:—"He who, though supported and not suffering [from any disorder], does not from insolence perform the work which is assigned to him,* should be fined eight Krishṇalás,[5] and his wages should not be paid."[6]

* ८१

The same [ch. viii., vv. 217, 216]:—"He who, whether ill or well, does not cause work to be performed according to stipulation, shall have no wages paid to him, though the work unperformed be but a little. [But] the sick may do it on recovery, according to the original bargain, and should receive his wages even after a long interval."[7] [Likewise says] Vishṇu:—"A servant leaving off work before the expiration of the [stipulated] full term shall forfeit the whole price of his labour, and pay one hundred *paṇas* to the king besides."[8] [Again says] the same [author]:—"If the master dismiss the servant before the expiration of the [stipulated] term, he shall pay him [the servant] his whole wages, and the king a hundred *paṇas* besides, unless the dismissal was due to the fault of the servant."[9] Vṛiddha Manu:—"A servant shall be caused to pay the full value of what he has lost by inattention; [and] twice the value of what he has lost by malice, but he shall not be required to pay anything for what was stolen by thieves, nor for what was burnt, or what was carried away by water."[10] *Droha*, malice or enmity; *Úḍham* carried away.

Yájñavalkya [ch. ii., vv. 197, 198]:—"He who raises obstacles at the auspicious moment of starting shall forfeit twice the amount of his

---

[1] Mit. ch. ii., l. 74, p. 2; Vír. l. 127, p. 2; Kam. and Vya. M.

[2] Mitákshara, l. 75, p. 1, that is the several callings of which these things are signs; see also Víramitrodaya, l. 128, p. 1, to the same effect. See Kam.

[3] Vír. l. 128, p. 1; Kam. and Vya. M.

[4] Vír. l. 128, p. 2; Mit. ch. ii., l. 74, p. 2; Kam. and Vya. M.

[5] A weight called *gunjá*.

[6] Vír. l. 128, p. 2; Mit. ch. ii., l. 75, p. 2.

[7] Vír. l. 128, p. 2; Mit. ch. ii., l. 75, p. 2.

[8] Vír. l. 128, p. 2.

[9] Vír. l. 129, p. 1.

[10] Vír. l. 129, p. 1.

wages; if he raises obstacles after setting out, [he shall forfeit] the seventh part; but the fourth part if he desert on the way."[1] Vriddha-Manu:—"Should a merchant [having hired a servant for a certain journey] sell his goods on the way, and discharge the servant, he too must be paid, [but] he shall receive half the wages."[2] Kátyáyana:—"And if the goods be stopped or seized on the way, the servant shall receive wages for so much of the way as has been passed by him. He who deserts [while] on a journey, a tired or sick servant, without taking care of him in a village for three days, shall pay the lowest fine."[3] *Asidhyeta,* (stopped,) *i.e.* attached by the king's order. Bṛihas-pati:—"If a servant by the command of his master do an improper act for his [master's] benefit, the offence is the master's. The work being performed, if the master does not pay the wages of the servant, he shall be caused by the king to pay them, and a proportionate fine."[4] Nárada:—"The owner of goods having hired carriages or beasts of burden, takes them not, shall be required to pay a fourth part of the hire, or the full amount if he leave them on the road half way."[5] *Yánam,* carriages, &c. *Váhanam,* direct vehicles such as horses, &c. Kátyáyana:—"He who having hired elephants, horses, bullocks, asses, camels, or the like, has used them, shall be required to pay the hire until he restore them [to the owner]."[6] Nárada:—"He who dwells in a house built by him on the ground of another paying rent for it, may take with him when he leaves it, the thatch, the wood, the bricks, and the like. But if he live without paying rent, and without an agreement on the ground of another, he shall, when he quits it, make over the thatch, the wood, and the bricks introduced to the lord of the land."[7] *Stomah,* rent or hire. End of 'Non-payment of Wages.'

## TRANSGRESSION OF A COMPACT.

[*Samvid-Vyatikrama.*]

Nárada:—"The compact [settled] among *Pákhaṇḍí* [apostates] and *Naigamas* (the followers of the Nigamas) are styled *Samaya* [or usage]. The recognition of [such] compact forms a title of law."[8] *Pákhaṇḍis,* persons pursuing commerce and the like, [and] deviating from the ordinances of the Vedas. *Naigamas* [means]* those who do not act contrary to the Vedas. By [the use of the] term *Ádi,* [&c.] persons skilled in the three Vedas are to

* 62

[1] Vír. l. 129, p. 1. [2] Vír. l. 129, p. 2. [3] Vír. l. 129, p. 2; and Kam.
[4] Vír. l. 130, p. 1; and Kam. [5] Vír. l. 129, p. 2; and Vya. M.
[6] Vír. l. 129, p. 2; Kam. and Vya. M. [7] Vír. l. 129, p. 2; and Kam.
[8] Vír. l. 130, p. 2; Mit. ch. ii., l. 74, p. 1; Kam. and Vya. M.

be included. The duty of the king in these matters is thus laid down by Bṛihaspati:—"Assembling Bráhmaṇás conversant with the Vedas, Śrotriyás (learned teachers of the Vedas), and Agnihotris (those who keep the three perpetual domestic fires), the king should establish them [in his kingdom], and assign them a maintenance. He should grant to them houses and lands, exempt from land-tax and [other] taxes, after recording [the fact of the grant] in his own mandate."[1] *Anáchchhedyakaráh* [means] those [houses and lands] on which taxes are not to be levied. *Muktabhávyáh* [means] those [lands and houses] which are exempted from [a payment of the share of] the produce from land or the like. Of those Śrotriyás (persons learned in the Vedas) and the rest, Yájñavalkya thus lays down the law [ch. ii., v. 186]:—"Customary law as well as usages established by kings should be carefully upheld, if not inconsistent with [the revealed] law."[2] Nárada:—"The king should maintain the *Samaya* or established usages prevailing among bodies of *Pákhaṇḍis*, *Naigamas*, *Śreni*, *Púgas*, and *Vrátás*, as well as [obtaining] in forts or countries."[3] The *Śreṇis* are communities of persons of different castes, carrying on one kind of trade or business. The *Púgas* are similar communities of persons [of different castes, but] carrying on different kinds of trades. The *Vrátás* are the associations of kinsmen, connexions or cognates, which are also termed *Kulas* (families). The [terms] *Pákhaṇḍis* and the *Naigamas* have been explained before.[4] *Gaṇas* [means] a combination of several communities of each class beginning with Pákhaṇḍis and ending with the Vrátás [respectively]. Yájñavalkya prescribes the punishment for the breach of a compact among them [ch. ii., v. 187]:—"Him who embezzles the property of the *Gaṇa* (a guild or a body), and him who violates their [established] usage, the king should banish from the realm after confiscating all his effects."[5] End of the 'Transgression of Compact.'

## RESCISSION OF PURCHASE.

### [*Krítánuśaya.*]

Nárada:—"The title of law termed *Krítánuśaya* applies where a purchaser is not satisfied with his purchase after buying a commodity."[6]

The same [author] fixes the time [allowed] for examining an article:—"Milch cattle should be examined within three days; beasts of

[1] Vír. l. 130, p. 2; and Vya. M. [2] Vír. l. 130, p. 2; Vya. M. and Kam.
[3] Vír. l. 131, p. 1; Vya. M. [4] See supra p. 129. [5] Vír. l. 132, p. 1.
[6] Mit. ch. ii., l. 71, p. 2; Vír. l. 133, p. 2; Kam. and Vya. M.

conveyance within five; the examination of pearls, diamonds, and corals must be within seven days; of bipeds and male [slaves] within half a month; of females within a month; of all seeds within ten days; of iron and cloth within one day."[1] Kátyáyana:—"The rescission of a sale of land, whether by the purchaser, or the seller, must be within ten days."[2] Bṛihaspati:—"If within those periods, a blemish arise in the commodity purchased, it should be returned to the seller, and the purchaser should receive back the price."[3] Kátyáyana:—"But that article which was bought unexamined, and afterwards discovered to have a blemish, should be returned to its owner within the time limited, but not otherwise."[4]

In regard to an article bought after an examination of it by himself, says Nárada:—"A purchaser who having bought an article for a price, thinks that he has made a bad purchase, should return it to the seller the same day without seeing it[5] [*i. e.* return it as received]. If the purchaser return it on the second day, he shall forfeit a thirtieth part of the price; if on the third day, twice as much [*i. e.* fifteenth part]; and after that it [*i. e.* the commodity] is altogether the buyers."[6] Nárada [says]:—"But a used garment which is soiled, and dirtied when purchased, cannot be returned to the seller though possessing blemishes."[7] End of 'Rescission of Purchase.'

---

## * RESCISSION OF SALE.

* ८३

[*Vikriyásampradána.*]

Nárada:—"When a vendible thing is sold for a price, and is not delivered to the purchaser, it is called the 'non-delivery after sale,' [and forms] a title of Judicature."[8] Yájñavalkya [ch. ii., v. 254]:—"He who having received the price of a vendible thing, does not deliver it to the buyer, shall be caused to deliver it together with *Udaya* [*i. e.* either profit or interest], and if [the purchaser] be one come from a foreign country, also the profit which would have accrued to him in that foreign country."[9] *Dik* [means] a foreign country. *Diglábha* [means] the profit which would arise by its sale in a foreign country.

---

[1] Vír. l. 133, p. 2; Kam. and Vya. M.
[2] Vír. l. 134, p. 1.
[3] Vír. l. 133, p. 2; Vya. M.
[4] Vír. l. 134, p. 1; Vya. M.
[5] The Mitákshará and other authorities use the word *avikshatam*, meaning undiminished or uninjured, and this seems to be the better reading.
[6] Meaning, it cannot be returned. Mit. ch. ii., l. 71, p. 2; Vír. l. 134, p. 1; Vya. M.
[7] Vír. l. 134, p. 2; Vya. M.
[8] Mit ch. ii., l. 83, p. 2; Vír. l. 134, p. 2; Kam. and Vya. M.
[9] Vír. l. 135, p. 1; Kam. and Vya. M.

*Sodayam* [means] together with profit. The same [ch. ii., v. 256] :—"If a commodity which [though sold] was not delivered on demand, be injured by an act of God or the king, the loss shall fall on the vendor."[1] The same [ch. ii., v. 255] :—"If loss arise by the fault of the vendee, on him alone it shall fall."[2] Nárada :—"If a vendee do not accept a commodity which he has bought, when it is offered, the vendor commits no offence in selling it to another."[3] Yájñavalkya :[4]—"That which was sold for an inadequate price by a drunken or by an insane man; or one not his own master; or by an idiot; must be given up [by the purchaser], and it shall again belong to him [the vendor]."[5] All these rules must be understood as referring to a contract made by the seller with the buyer to the effect, 'The price being paid, the article is to be delivered to you alone and to no other;' because [says] Nárada :—"This rule is declared for a commodity the price of which has been paid, where the price has not been paid, the seller in the absence of a special agreement is not guilty [if he dispose of the article]."[6] On the sale of an article with blemishes says Yájñavalkya :—"The dishonest man who sells an article knowing it to be with blemishes shall be required to pay double the price of the same, and a fine of an equal amount [to the king]."[7] End of 'Rescission of Sale.'

---

## DISPUTES BETWEEN THE MASTER AND THE HERDSMAN.

### [*Svámipálavivâda.*]

On the damage done to cattle and other animals by the fault of the herdsman, [says] Yájñavalkya [ch. ii., v. 165] :—"When injury is done [to animals] by the fault of the herdsman, the fine ordained for him is twelve *paṇas* and a half,[8] and he should restore the thing [*i. e.* the animal] to the owner."[9] *Dravyam* (the thing) [means] a cow or

[1] Vír. l. 135, p. 2; Kam.; Vya. M. [2] Vír. l. 135, p. 2; Kam.

[3] Vír. l. 135, p. 2.; Kam. and Vya. M.

[4] This is a text from Bṛihaspati, Vír. l. 136, p. 1.

[5] Vír. l. 136, p. 1. Vír. ascribes this couplet to Bṛihaspati, and reads *Hínamúlyam Bhayena vá* ([an article] of inferior value [sold] under intimidation), instead of *Hinamúlyena yena vá*,' in the second quarter.

[6] Mit. ch. ii., l. 84, p. 1; Vír. l. 136, p. 1; and Vya. M.

[7] Vír. l. 136, p. 1; and Vya. M., which refer it to Bṛihaspati.

[8] Vijñaneśvara translates the same word by 13½ [l. 68, p. 2]; the construction above adopted seems to be the better of the two and is supported by Vír. (l. 137 p. 1).

[9] Vír. l. 137, p. 1; Kam.; compensation is here intended; for the thing being damaged or lost cannot be returned in specie.

the like. Manu lays down the mode of ascertaining the death of cattle or other animals [ch. viii., v. 234]:—"When animals die, let him [*i. e.* the herdsman] carry to his master their ears, their hides, their hair, the skin below the navel, their tendons, and the pigments [found in their foreheads]; let him also show [other] marks."[1] *Aṅka*, according to Madana, [means] horns and the like. Yájñavalkya defines the portion of ground [to be set apart] as pasturage for kine and other animals [ch. ii., v. 167]:—"A space should be left between one village and another village [measuring] one hundred *dhanus* [or 400 cubits] in extent; [measuring] two hundred *dhanus* around a country town, and four hundred *dhanus* about a city."[2] *Paríṇáha* [is] the land appropriated for pasture of kine and other animals. This [*paríṇáha*] is the *paríhára* (enclosure) mentioned by Manu in the text [ch. viii., v. 237]:—"Round about a village a *paríhára* (enclosure) should be left of one hundred *dhanus*." A *kharvaṭa* is a village having several artificers and husbandmen.[3]* According to some[4] it is a place * 78 abounding in thorny shrubs. Yájñavalkya states the fine to be paid by the owner of a beast which has eaten the corn or the like of another [ch. ii., vv. 159, 160, 161]:—"[The owner of] a she-buffalo doing damage to corn shall be fined eight *máshas*[5] [for each animal]; that of a cow, half of that; and that of a goat or sheep, a half of that again. [Again] for cattle eating and lying down in the field, the fine is double the [one], mentioned [above]. The fine is equal in the case of lands where grass or fuel is stored, and the fine for an ass or a camel is the same as that for a she-buffalo. As much corn as may be destroyed shall be paid to the owner of the field; the herdsman shall be scourged, but the owner of the cattle incurs the fine already declared."[6] *Vivítam* [means] a place for storing grass, wood, or the like. Uśanas states an

---

[1] Mít. ch. ii., l. 68, p. 2; Vír. l. 137, p. 1; Kam.; Vya. M. The Mit. and the Vír. read '*Angáni darśayet*' (should show limbs) instead of '*Aṅkábhidarśané*,' Vír. has also the same reading.

[2] Vír. l. 137, p. 2; Kam.; Vya. M. A *dhanush* is another name for the measure of space called *Daṇḍa*, which is equal to four cubits. Vír. and Mit. read ग्रामक्षेत्रान्तरं (the distance between the village and the fields) instead of ग्रामाद्ग्रामान्तरं, and that seems to be the better reading.

[3] So also the Madana-Ratna, see the Vír, l. 137, p. 2.

[4] Mádhava, Vír. l. 137, p. 2. The same is the opinion of Vijñáneśvara, l. 69, p. 1.

[5] Bháskaráchárya's Lílávati thus gives the table of these measures in v. 4. दशार्धगुञ्जं प्रवदन्ति माषं माषाद्वयैः षोडशभिश्च कर्षम् (Half of ten [viz. five] *gunjás* make a *másha*, and 16 [measures] called *másha* make a karsha). A *Másha* is a twentieth part of a *paṇa* as well, see Vír. l. 138, p. 1.

[6] Vír. l. 138, p. 1; Vya. M.

exception to this :—"Kine are not liable to fine [for trespass] during festivities, and [the performance of] obsequies [*śráddha*]."[1] Vyása :—"Oh, tiger among men [*i. e.* excellent man], he [whose property] has been forcibly enjoyed by Bráhmaṇas, or by very indigent relations, or by kine, excels [the performer] of the *Vájapeya* sacrifice."[2] Uśaná :—"Neither do ancestors nor deities taste the offering of that man who demands compensation for corn destroyed by kine."[3] End of 'Disputes between Master and Herdsman.'

---

## BOUNDARY DISPUTES.

[*Símávíváda.*]

Bṛihaspati states the means whereby boundaries may be known :—"Dry cow-dung, bones, husks of grain, charcoal, gravel stones, potsherds, sand, bricks, cows' hair, cotton seeds, and ashes having been placed in vessels, should be deposited underground at the extremities of the boundary."[4] Yájñavalkya distinguishes the witnesses required in this matter [ch. ii., v. 152] :—"*Sámantas*,[5] men of the neighbouring villages, or of that in which the disputed ground is situated, equal in number [from each village] [being] either four, eight or ten, having put on a garland of red flowers and a red dress, and taking some of the earth [on their heads], shall point out the true boundary."[6] Nárada :—"A single man shall not point out a [disputed] boundary, even if he knew it; for from the weighty nature of this business, this act [viz., the pointing out] rests with many."[7] Bṛihaspati :—"In default of persons knowing [the boundary] and [where the aforesaid] marks [of a boundary] are wanting, even a single man who is virtuous and upright, and is agreed to by both parties, having put on a garland of red flowers and red clothes, and taking some earth on his head, and having fasted, may mark out the boundary."[8] Kátyáyana :—"[In the case of] tracing a boundary, [in] undergoing the *kosá* ordeal (ordeal by holy water), and likewise [in]

---

[1] Vír. l. 139, p. 1; Kam.; Mit. ch. ii., l. 68, p. 2. [2] Vír. l. 139, p. 1.

[3] Madan refers this to damage done by a cow on a *Śráddha* day, see Vír. l. 139, p. 1.

[4] Kam.

[5] The Mit. (ch. ii., l. 65, p. 1); and Vír. (l. 140, p. 1) treat *Samagráma* as an adjective of *Sámanta*, and interpret it as being equal in number from each village.

[6] Vír. l. 140, p. 1; Kam.; Vya. M.

[7] Mit. ch. ii., l. 65, p. 2; Vír. l. 141, p. 1; Vya. M.

[8] Vír. l. 141, p. 1; Kam.; Vya. M.

swearing by holy feet,[1] the [visitation] of God or of the king is to be expected within three fortnights, one fortnight, and seven days [respectively]."[2] Manu [ch. viii., v. 257]:—"Veracious witnesses who point out the true boundary in the aforementioned [manner] are absolved from their sins, but such as declare falsely shall be fined [each] two hundred [*paṇas*]."[3] Narada:—"Now if the Sámantas [neighbouring villagers] should speak [what is] not true in pointing out a [contested] boundary, they should be fined all separately by the king in the middling amercement."[4] Kátyáyana:—"If all of the several witnesses called do not give a proper testimony from either fear or covetousness, they shall be fined in the highest amercement."[5] Yájñavalkya [ch. ii., v. 153]:—"In default of persons knowing, or of the [aforesaid] marks [of a boundary], the king should determine the boundary."[6] Manu [ch. viii., v. 265]:—"If the boundary cannot be [otherwise] ascertained* a just king should himself assign the [contested] land to him to whom it would be most serviceable. This is the law."[7] The same [author] says:—"The [particular] mode of enjoyment of a house and its doors, a market or the like, dating from the date of [first] entry by the enjoyer, shall not be disturbed."[8] Kátyáyana also [says]:—"The base of a wall, an aqueduct, a gallery, and lattices, and water-courses, and dwelling-house, should not be interfered with; he who obstructs [these] shall be punished."[9] *Mekhalá*, base of a wall. *Bhramah*, passage for the exit of water. *Nishkása* [is] according to Madana a resting place, made of wood or other material, not touching the ground, but built [projecting] out of a house or the like. In some copies the reading is *Dhúma-nishkúsa* [instead of *bhrama-nishkása*], in which case the meaning is a lattice or the like for letting out smoke. By the term *ádi* (or the like) are meant the walls of other people and the like. The same [author] says:—"After the date of [first] entry [or possession] such things are not at any time to be made; neither a lattice, nor a water-course [running into another's house] shall be made."[10] Bṛihaspati:—"Never shall a necessary, a fire-place, or a pit or [a receptacle for] the throwing of unclean water from the mouth be made very near

* ८५

[1] Of idols of Bráhmaṇas, &c.

[2] Mit. ch. ii., l. 66, p. 1; Vír. l. 141, p. 1; Kam.; Vya. M.

[3] Id. [4] Mit. ch. ii., l. 66, p. 1; Vír. l. 141, p. 2; Vya. M.

[5] Mit. ch. ii., l. 66, p. 1; Vír. l. 141, p. 2; Vya. M. [6] Vír. l. 142, p. 1; Kam.

[7] Mit. ch. ii., l. 66, p. 2; Vír. l. 142, p. 1; Kam.

[8] Vír. l. 142, p. 2; Kam.; Vya. M. The Vír., Kam., and Mádhava attribute this couplet to Bṛihaspati, and moreover it does not occur in three different editions of Manu consulted.

[9] Vír. l. 142, p. 1; Kam.; Vya. M. [10] Vír. l. 143, p. 1; Kam.

the wall of another."[1] *Varchassthánam* is a privy; *Atyárát* [means] in close contact. Kátyáyana:—"[Places] for [depositing] filth, urine, and for throwing water, a fire-place and a pit should be made at the distance of [not less than] two cubits from the walls of other people."[2] Bṛihaspati:—"That [road] by which men and animals pass and repass uninterrupted is called *Samsaraṇa* or a high-way; and [it] should not be obstructed by any one whatever."[3] Nárada:—"[No one] should obstruct a *chatushpatha* (a thoroughfare), a place [dedicated] to the gods, or the king's highway, by [making] there a place for filth, a pit, a drain [or aqueduct], and eaves [of a house]."[4] Kátyáyana:—"That [road] by which all pass unobstructed at all times [of the day] is a *chatushpatha* (thoroughfare), and that which is open at stated times is called *Rája márga* (the king's way)."[5] Bṛihaspati:—"He who there intentionally places sweepings,[6] or makes a pit, or plants trees, or wilfully voids ordure, shall be fined in one *máshaka*."[7] Manu [ch. ix., v. 282]:—"He who shall void ordure on the king's highway save under necessity, shall pay two *kárṣha paṇas*[8] and immediately remove the filth."[9] Kátyáyana:—"He who defiles a pond, a garden, or holy waters, with ordure shall, after having removed the filth, pay the lowest fine."[10] Yájñavalkya [ch. ii., v. 155]:—"For destroying boundary marks [of lands], for encroaching beyond their boundaries of lands, and for usurping lands, the fine is the lowest, the highest, and the middling [respectively]."[11] Manu [ch. viii., v. 264]:—"He who, by means of intimidation, shall usurp [possession of] a house, a tank, a garden, or a field, shall be liable to a fine of five hundred [*paṇas*], but only two hundred if he did it through ignorance."[12] Kátyáyana:—"The fruit and flowers of trees produced upon the boundary between two fields, should be declared as joint property of the masters of the two fields."[13] The same [author] says:—"But where the branches of trees growing in one man's field, are spread over that of another, then he shall be considered as the owner in whose field the trees stand."[14] Yájñavalkya [ch. ii., v. 157]:—"If a man without giving notice to the owner, set up an embankment round his [the owner's] field, the enjoyment of its profits is [the right] of the owner, or on failure of

[1] Vír. l. 143, p. 1; Kam. [2] Id. [3] Vír. l. 143, p. 1; Kam.; Vya. M.
[4] Id. [5] Vír. l. 143, p. 1.
[6] The word is *Sankara* (sweepings) which is explained by the Vír to be the crowding of a road by carts, &c. (l. 141, p. 1).
[7] Vír. l. 143, p. 1; Kam. [8] Amarakośa, *Kánda* ii., *varga* ix., v. 88: a rupee.
[9] Vír. l. 143, p. 2; Kam.; Vya. M. [10] Vír, l. 143, p. 2; Kam.
[11] Vír. l. 143, p. 2; Kam; *Kshetra* in this verse is given as illustrative of a house. (See Mitákshara, ch. ii., l. 66, p. 2.)
[12] Vír. l. 143, p. 2; Vya. M. [13] Vír. l. 143, p. 2; Kam.; Vya. M.
[14] Vír. l. 144, p. 1; Vya. M. Vír. interprets the word *sansthatáh* standing by the synonyme *prarudhah* (grown), which makes the sense more definite.

him, of the king."[1] The same [ch. ii., v. 156]:—"An embankment producing benefit should not be prohibited [by the owner of the field] where the inconvenience is slight; and [similarly] a well which occupies but little space and supplies abundance of water."[2] *Na nishedhyah* (should not be prohibited), should be repeated [in the latter hemistich]. Nárada also:—"A reservoir in the middle of another man's field should not be objected to, if the benefit is great and the damage small, [for] a profit is to be desired [even at the cost of a] trifling loss."[3] *Nárada:—"If any one without asking the owner, repair a reservoir built long before, but fallen into decay, he [the repairer] shall not enjoy the profits of it."[4] Vyása:—"If any one having taken [*i. e.* rented] a field, shall neither till it himself, nor cause it to be tilled, he shall be made to pay to the owner of that field its [possible] produce, and to the king a fine equal to its value."[5] *Sada* [means] the possible outturn of the field. End of 'Boundary Disputes.'

---

## ABUSE.

[*Vákpárushyam.*]

Bṛihaspati:—"That is called abusive language of the first (or lowest) degree, where without [the specific mention of] the individual, [general] defamation of or the attributing of a vice to one's country, town, or family is made. [Accusation of] connexion with the sister or the mother or of a secondary sin is called the middle degree of verbal abuse by those skilled in the Śástras. Accusation of [using] forbidden food or drink, or charging with a primary[6] sin, or the exposure of one's weakest points, is termed abuse of the highest degree."[7] *Dravyam viná* [means] mere mention made without reference to a particular thing or person. *Abhighaṭṭanam* [means] divulging. Vishṇu:—"For abuse of one [who is] of the same class, a man is to be fined twelve *paṇas*."[8]

In another Smṛiti it is [laid down]:—"When two persons stand charged with [using] mutual abuse simultaneously commenced, and no difference is observable [in their respective guilt], the punishment of both is equal."[9] Nárada:—"He who commences an abusive [language] shall most certainly be held to be blameworthy; he who [abuses]

[1] Vír. l. 144, p. 1; Vya. M. [2] Vír. l. 144, p. 1; Kam.
[3] Vír. l. 144, p. 1; Kam.; Vya. M.
[4] Vír. l. 144, p. 1; Mit. ch. ii., l. 67, p. 1; Kam.; Vya. M.
[5] Vír. l. 144, p. 2. [6] For the five kinds of primary sins see Manu ch. xi., v. 54.
[7] Vír. l. 148, p. 2; Vya. M.
[8] Vír. l. 149, p. 1; where this text is stated to apply, where there has been reciprocal abuse.
[9] Vír. l. 145, p. 1; Vya. M.; Vír. and M. attribute this couplet to Nárada.

in return is also guilty of improper conduct, but he who first began receives heavier punishment."[1] Manu [ch. viii., v. 267]:—"One defaming a Bráhmaṇa shall, if he be a Kshatriya, be fined a hundred *paṇas*; if a Vaiśya, a hundred and fifty or two hundred; and if a Súdra [he] shall be liable to death."[2] Bṛihaspati:—"The punishment of a Bráhmaṇa for giving abuse to a Kshatriya shall be fifty *paṇas*; to a Vaiśya twenty-five; [and] if to a Súdra, twelve and a half."[3] With respect to a Súdra the same author [says]:—"[A *Súdra*] who teaches [the ordinances of] religion by [citing] examples from the Vedas, or is a reviler of Bráhmaṇas, shall be punished by having his tongue cut out."[4] Manu [ch. viii., v. 275]:—"He who defames his mother, his father, his wife, his brother, his father-in-law, and his preceptor, or who does not make way for his preceptor, shall be fined a hundred *paṇas*."[5] *Bhrátá* [means] the elder brother, because of his mention along with the father and the rest. According to the Mitákshará [ch. ii., l. 77, p. 1] and other [authorities], this punishment [would follow abuse] in the case, of a mother and the rest, even though they were guilty; and in the case of a wife, [only] if she were innocent. Yájñavalkya [ch. ii., vv. 208, 209] :—"Let a fine to the amount of a hundred *paṇas* be inflicted for abuse threatening injury to the arm, neck, eyes, or thigh; and the half of it for like abuse to the foot, nose, ears, the hand, or the like. If this [imprecatory threat] be uttered by a feeble person he should be fined ten *paṇas*; but if by one able [to carry the threat into execution] he should be also required to give security for the safety of the person [threatened]."[6] The same [ch. ii., vv. 205, 211] :—"Any one abusing another thus, 'I shall have criminal connexion with thy sister or thy mother,' shall be made by the king to pay a fine of twenty-five [*paṇas*]. The highest fine shall be for him who abuses a Bráhmaṇa learned in the three Vedas, the king or the gods."[7] Nárada :—"A man calling a degraded man, degraded,* or a thief, [by the epithet of] thief, [commits] an offence, but if he falsely abuses them the offence shall be twice as great."[8] Yájñavalkya [ch. ii., v. 204] :—"He who by true, untrue, or ironical [statements] ridicules persons wanting a limb, or an organ of sense, and the diseased, shall

*८७

---

[1] Vír. l. 145 p. 1; Kam.; Vya. M.; Mit. ch. ii., l. 78, p. 2.

[2] Mit. ch. ii., l. 78, p. 1; Vír. l. 149, p. 1; Kam. Kulluka explains the term वध to be a punishment in general, such as beating, and not necessarily death.

[3] Vír. l. 149, p. 2; compare with this the text in Manu ch. viii., v. 268.

[4] Vír. l. 149, p. 2. [5] Vír. l. 149, p. 2; Mit. ch. ii., l. 77, p. 1; Kam.; Vya. M.

[6] Vír. l. 149, p. 2; Kam.; Vya. M. [7] Vír. l. 150, p. 1; Kam.

[8] Vír l. 150, p. 1.

be fined 12½ *paṇas*."[1] Uśanas:—"He who confesses [that] 'such a thing was said by me through ignorance, or carelessness, envy, or familiarity, I will not say so again,' should be fined half the [ordinary] amount."[2] End of 'Abuse.'

---

## ASSAULT.

### [*Daṇḍapárushya.*]

Nárada:—"Injury inflicted upon the limbs[3] of another with the hand, foot, weapons, or the like, or by throwing ashes or the like, is called *daṇḍapárushya* (assault)."[4] Bṛihaspati:—"The man who having received abuse, returns abuse, or being beaten, returns the blow; or he who stripes one who does him wrong, does not commit an offence."[5] Kátyáyana:—Bhṛigu has ordained that the highest punishment shall be inflicted for cutting off an ear, a nose, a thigh, the eyes, tongue, the penis, or a hand; [that of] the middling degree for breaking [or wounding] any one of them."[6] Yájñavalkya [ch. ii., vv. 213, 214]:—"A fine of ten *paṇas* is recorded [as] the punishment for throwing ashes, mud, or dust on a person. Double that sum [is recorded] for throwing at him filth,[7] the heel, or the spittle. This [holds, if the offence be committed] against one of the same [class]. But [if the offence be committed] against the wife of another or against one of a higher class, [the fine shall be] doubled; if against one of an inferior class, the fine shall be half; if committed through aberration of the intellect, drunkenness, or the like, no fine [shall be inflicted]."[8]

---

[1] Vír l. 148, p. 2. The compound अर्धत्रयोदश is explained by Vijnáneśvara to mean thirteen *paṇas* and a half (see Mit. ch. ii., l. 77, p. 1). But for the grammatical inaccuracy involved in this interpretation, see Vír. l. 149, p. 1. Besides the regular proportion which 12½ bears to 25 would favour the interpretation adopted in the translation.

[2] Vír l. 150, p. 2; Kam.

[3] Vír explains the word गात्र, which primarily means body, to be स्थावरजङ्गमात्मकं (immoveable as well as moveable); so that the injury referred to in this text would be injury to the body as well as to property.

[4] Mit. ch. ii., l. 78, p. 2; Vír. l. 145, p. 1; Kam.; Vya. M.

[5] Vír. l. 145, p. 2; Vír. says it is not here meant that a retorter commits no offence whatever, but that his offence is not so great as that of the aggressor. Nárada's text at p. 137, l. 33 would justify this interpretation.

[6] Vír. l. 146, p. 1. The first quarter of this text as cited by the Vír. is कर्णोष्ठघ्राणपादाक्षि This reading is preferable as being more grammatical, and as adding the lip to the list of limbs which it is an offence to injure.

[7] The word in the text is अमेध्य which is explained to be अश्रुश्लेष्मादीनि (tears, phlegm, &c.) see Vír. l. 145, p. 2.

[8] Vír. l. 145, p. 2; Vya. M.

*Párshṇih* [is] the hind part of the foot. Kátyáyana:—"The fine is declared to be fourfold when a vomit, or urine, or fæces, or the like, are thrown upon the lower extremities; sixfold if [thrown] upon the middle of the body; but eightfold if upon the head."[1] Yájñavalkya [ch. ii., v. 216]:—"For holding up [threateningly] a hand or a foot, the punishment shall be ten and twenty [*paṇas* respectively]. The middle scale of punishment is declared for all classes for mutual pointing of weapons."[2] The same [author says] [ch. ii., vv. 217, 218]:—"The [fine of] ten *paṇas* [shall be inflicted] for violent pulling of the foot, the hair, the clothes, or the hand [of another]; a hundred, for violently pulling a man caused to be tied in his clothes and trampling him under foot. The man who causes pain [to another] with a stick or the like, without shedding blood, shall be fined thirty-two *paṇas*, double that sum if blood be shed."[3] *Píḍetyádi*, (pain, &c.) The meaning is that a hundred [*paṇas* is the fine] for trampling a man under foot [after] having tied him in his clothes and pulled him violently. The same [ch. ii., vv. 219, 215]:—"The middle fine [shall be imposed] for breaking a hand, a foot, or a tooth; for tearing the ears or the nose; for laying open a sore, and likewise for beating one till he is almost dead. The limb with which any one, not himself a Bráhmaṇa, gives pain to a Bráhmaṇa, shall be cut off. The lowest amercement is laid down [if the limb or weapon is only] raised; and half of it, if the Bráhmaṇa was touched [with the weapons]."[4] Manu [ch. viii., vv. 279, 280]:—"With whatever limb a man of the lowest caste [*i. e.* a Śúdra] shall assault or hurt one of a superior class, even that member of his shall be cut; so ordains Manu. He who raises his hand or a staff [against another] shall be liable to have his hand cut off."[5] Kátyáyana:—"Just as [different] fines are laid down for *vákpárushya* (abuse) according to the regular or inverse order of the classes, even so shall fines for assault be imposed according to the same scale."[6] Vishṇu:—"The fine for every one of many persons beating one* shall be double of that declared [for a single offender]."[7] Kátyáyana:—"Just as fine is to be imposed in cases of injury to the organs of the body, so shall something be paid [by the offender to the injured] for appeasing [him] and for his cure [as may be fixed] by competent men." *Tushṭikaram* (agreeable), something giving satisfaction to the sufferer. *Samutthánam* [is] the price of medicines and the like. *Paṇḍitaih* [means] by skilled

* 〃

[1] Mit. ch. ii., l. 79, p. 1; Vír. l. 145, p. 2; Kam.; Vya. M.
[2] Vír. l. 146, p. 1; Kam.; and Vya. M.
[3] Id.
[4] Vír. l. 146, pp. 1 and 2; Vya. M.
[5] Mit. ch. ii., l. 79, p. 2; Vír. l. 146, p. 2; Vya. M.; Kam.
[6] Mit. ch. ii., l. 80, p. 1; Vír l. 146, p. 2; Kam.; Vya. M.
[7] Vír. l. 147, p. 1.

men. The meaning is—what may be fixed by skilled persons should be paid [to the sufferer]. With reference to the beating and the like of animals, says Yájñavalkya [ch. ii., vv. 225, 226]:—"For giving pain, drawing blood, cutting off the branches [as horns, &c.] or a limb, the fine shall be from two *paṇas* upwards[1] in the case of minor quadrupeds. For cutting off their organs of generation and causing [their] death, the middle amercement shall be paid [in addition to] their value. A double punishment shall be imposed in the case of [similar injury to] superior animals."[2] In respect of damage to trees [says] Manu [ch. viii., v. 285]:—"According to the use and value of trees must a fine be imposed for destroying them; this is an established rule."[3] End of 'Assault.'

---

## THEFT.

[*Steyam.*]

Nárada specifies three classes of things [which are] the subject of it. "Earthen utensils, seats, bedsteads, [articles made of] bone, wood, or leather, grass, and the like, leguminous[4] grains, and cooked food are termed inferior articles. All but silken [kinds of] cloth, likewise all beasts except kine; all metals[5] except gold, [and grain] like rice, barley, and the like, are termed articles of middling quality. Gold, precious stones, silken cloth, females, males, kine, elephants, horses, and [the wealth] of the gods, Bráhmaṇas, and the king are to be understood articles of the best quality."[6] The same [author] here first enumerates open thieves [*i. e.* cheats or impostors]:—"*Naigamas* [traders], quack-doctors, assessors taking bribes, cheats, astrologers, prostitutes, artizans, forgers, and those who perform unlawful acts, [false] arbitrators, false witnesses, and likewise jugglers [living by fraud or deception]—these are open thieves."[7] Similarly in another *Smṛiti*[8] [we find] "open cheats, persons dealing in false weights and measures, those who take bribes, those who practise fraud, impostors, women of ill repute, forgers

---

[1] Vijñáneśvara states that this fine is always two *paṇas* or some multiple of two (see Mit. ch. ii., l. 80, p. 2.)

[2] Vír. l. 147, p. 1; Kam.; Vya. M.

[3] Vír. l. 147, p. 1; Kam. For a graduated scale of fines according as the injury done is in respect of fruit trees, flower plants, creepers, grass, &c. see the text of Vishṇu cited by Kullúka in his commentary on v. 285, ch. viii. of Manu (l. 144, pp. 1 and 2).

[4] See Amara Kośa, *Kanda* ii., *Varga* ix., v. 24, (p. 215,) where the different grains of this tribe are enumerated.

[5] The word used is *loha*, which means any metal in general, as well as iron; but here it is used in its general sense.

[6] Vír. l. 150, p. 2; Kam.

[7] Vír. l. 151, p. 1; Kam.; Vya. M.

[8] This is from Nárada, see Víramitrodaya, l. 151, p. 1.; Kam.

and fortune-tellers,—these and the like are to be known as open thieves on earth."[1] Bṛihaspati:—"That seller who sells an article concealing its blemishes, adulterating it, or after repairing it, shall be required to give twice the quantity [to the purchaser], and likewise pay a fine equal to the [value of the article]. That physician who although ignorant of medicine or *mantras* (incantations), or unacquainted with [the nature of] disease, yet takes money from the sick, shall be punished as a thief. Those who play with false dice, prostitutes, those who appropriate the king's dues, astrologers, and cheats are swindlers declared as deserving of punishment. Assessors pronouncing an unjust decision, also those who live by bribery, and those who cheat persons trusting them—all these should be banished. Those who do not understand the science of the stars, or [of] portents, and [yet] expound omens and the like to mankind, shall by all means be chastised. Those who exhibit themselves [as religious mendicants] with a staff, deer's skin, and the like, and murder mankind in that disguise, shall be whipped by the king's people. Those who dexterously dress a thing of very small value into one of great price, and impose [thereby] upon the ignorant, deserve to be punished in proportion to the amount [gained by fraud]. Those who make false gold, false gems, false coral, and the like* shall be required to give back * ८९ their price to the buyer and pay a fine of double the amount to the king. Arbitrators who become corrupt through favour, gain, or other [motive], and witnesses who give false evidence, shall be compelled to pay a fine of double [the amount in dispute]."[2] Vyása:—"Those who are found stealthily walking about at night, furnished with implements [of theft] and the like, and those whose place of abode is not known, are to be known as secret thieves."[3] The same [author adds]:—"A pick-pocket,[4] a house-breaker, a highway man, a cut-purse, and a stealer of women, men, cattle, horses, and other animals are declared the nine kinds of thieves."[5] *Sandhih* (joint) is the [joint] of a wall, &c. Yájñavalkya [ch. ii., v. 274]:—"The tongs [*i. e.* the forefinger and index] of the hands of the pick-pockets and cutpurses should be cut off [for the first offence]; for the second offence they should be deprived of a hand or a foot."[6] *Saṅdaṅśa* [means] the

[1] Vír. l. 151, p. 2; Kam.; Vya. M.

[2] Vír. l. 151, p. 2; Vya. M. [3] Vír. l. 151, p. 1; Kam.

[4] The word used is उत्क्षेपक which is explained by the Vír. to mean one who seeing people off their guard cuts off their pockets, &c. see l. 151, p. 1; and by the Mit. to mean a stealer of clothes (ch. ii., l. 87, p. 2.)

[5] Vír. l. 151, p. 1; Kam.; Vya. M.

[6] Vír. l. 151, p. 1; Kam. The reading adopted by the Mit. and the Vír. in lieu of the last quarter of this text is करपादैकहीनकौ which means 'deprived of one hand and one leg.'

forefinger and thumb. Manu [ch. ix., v. 276]:—"The robbers who having broken a wall commit a robbery at night, shall have their hands cut off, and they should be impaled on a sharp stake by the king."[1] Bṛihaspati:—"So also shall highwaymen be hanged by the neck from a tree."[2] "[The king] shall cause two fingers of a cut-purse to be cut off for the first offence; on a second conviction, one hand and one foot; on the third, he would deserve capital punishment."[3] *Anguli* (two fingers) [meaning] the forefinger and the thumb.[4] Nárada states a special rule in [regard] the flight of a thief taking the stolen property with him:—"A thief shall by every effort be seized by that [officer] within whose district[5] he may have committed theft; unless a trace or foot-mark be carried out [of the district], he [*i. e.* the village officer] shall be made to pay the amount of the loss. Again, when the trace [of a thief] having left a certain district is found, but is not carried into another definite place, the *sámantas* (neighbouring villagers), the *márgapála* (road-keepers), and *dikpálá* (those guarding the entrances) should be made to pay the loss."[6] Yájñavalkya also [ch. ii., v. 272]:—"The village shall pay when [the theft took place] within its limits, or that village to which the trace is carried. If [the theft be committed] beyond one *krośa* (two miles) [from any village], [the communities of] five surrounding villages or even of ten villages [shall pay]."[7]

On [the subject of] kidnapping women, Vyása [says]:—"The woman-stealer shall be burnt on an iron bedstead with a fire of grass; the man-stealer shall be set up where four roads meet after having his hands and feet cut off."[8] Bṛihaspati:—"Having cut off the nose of a stealer of kine and bound him, let them plunge him into the water."[9] Nárada:—"[Confiscation of] the whole property is [the punishment] for the kidnapper of a woman; death for that of a maiden; so shall [the whole property] be confiscated of those who carry off horses, elephants, or metals; as is ordained by Bṛihaspati."[10] The word *Sarvasva* (whole property) is to be repeated [in the latter hemistich]. Vyása:—"Let them cut off with a sharp instrument half the foot of

---

[1] Mit. ch. ii., l. 88, p. 2; Vír. l. 151, p. 2; Kam.

[2] Vír. l. 152, p. 1; Kam.; and Vya. M.

[3] Vír. l. 152, p. 1; Mit. ch. ii., l. 87, p. 2; Kam.; and Vya. M. This text belongs to Manu (ch. ix., v. 277), whose name has been omitted evidently through inadvertence.

[4] The MSS. E and H have the following here in addition:—नारदः। प्रथमे ग्रन्थिभेदानामङ्गुल्यङ्गुष्ठयोर्वधः (At their first offence, cut-purses will have their forefinger and thumb cut.)

[5] The word used is गोचर (range).

[6] Kam.; Vya. M.; Mit. ch. ii., l. 87, p. 1.

[7] Kam.; Vya. M.

[8] Vír. l. 152, p. 1; Kam.

[9] Vír. l. 152, p. 1.

[10] Vír. l. 152, p. 1; Kam.

him who carries off [common] animals." Nárada:—"Let the punishment for stealing animals of a superior kind be the highest fine; for stealing the middle class of animals the middling fine; and for stealing mean animals the lowest fine."[1] Manu [ch. viii., v. 320]:—"*Vadha* (corporal punishment) [should be inflicted] on him who steals more than ten *kumbhas*[2] of grain; for [the theft of] less he shall be fined eleven times as much, and pay to the owner the amount of his property."[3] One *kumbha* is twenty *prasthas*. The same [ch. viii., v. 323]:—"For stealing principal gems, the thief deserves capital punishment."[4] Nárada:—"Capital punishment shall be inflicted for stealing more than a hundred [pieces] of gold and silver, or the like, valuable clothes and likewise all precious stones."[5] Manu [ch. viii., vv. 321, 322]:—"The cutting of the hand is the punishment approved for those who steal more than fifty gold and silver [pieces] and the like, or valuable clothes; for [stealing] less, the king shall impose a fine of eleven times the value."[6]

* ९० *Yájñavalkya [ch. ii., v. 270]:—"A Bráhmaṇa [guilty of theft] should be branded and banished from the kingdom."[7] Manu [ch. ix., v. 240]:—"[Criminals of] the three first classes, if they perform expiation ordained by law, should not be branded by the king on the forehead, but should be condemned to pay the highest fine."[8] Yájñavalkya also [ch. ii., v. 270]:—"Having caused restitution of the stolen property, the king shall cause the thief to be punished by different modes of corporal punishment."[9] Nárada:—"They who supply food and shelter to runaway thieves, and they who connive at their escape, though able [to arrest them] are also participators in their guilt."[10] They are also liable to the same fine. End of 'Theft.'

---

## A HEINOUS OFFENCE.

[*Sáhasa.*]

Its nature is [thus] declared by Nárada:—"Whatever act is done by force, by one inflamed by pride is denominated *Sáhasa*; [for] *Sahas*

---

[1] Vír. l. 152, p. 1; Kam.

[2] Kullúka explains a कुम्भ to be a measure equal to 20 द्रोण (see his commentary on this verse, Manu l. 147, p. 1.)

[3] Mit ch. ii., l. 88, p. 1; Vír. l. 159, p. 1; Kam.; Vya M.

[4] Vír. l. 152, p. 2 Kam.; and Vya. M.

[5] Id. [6] Mit. ch. ii., l. 88, p. 2; Vír. l. 152, p. 1; Kam.; Vya. M.

[7] Vír. l. 152, p. 2; Vya. M. [8] Mit. ch. ii., l. 87, p. 1; Vír. 152, p. 2; Vya. M.

[9] Vír. l. 152, p. 1; Kam. [10] Mit. ch. ii., l. 81, p. 1; Vír. l. 153, p. 1.

here [means] force or strength."[1] Bṛihaspati:—"Manslaughter, robbery, assault on another man's wife, and both species of *párushya* (assault) are the four kinds of *Sáhasa*."[2] *Ubhayam* [means] both; that is abuse and assault. Nárada [says]:—"Destroying fruits, roots, water, and such other things, and agricultural implements, throwing them away, treading them under foot, or the like, is declared to be *Sáhasa* of the lowest degree. [Misusing] in the above-mentioned way, clothes, animals, food, drink, and household utensils, is declared to be *Sáhasa* of the middle degree. Homicide with poisons, weapons, or the like, an indecent assault on another man's wife, and anything jeopardizing life is called *Sáhasa* of the highest degree."[3] Yájñavalkya [ch. ii., v. 273]:—"[The king] shall cause to be impaled on a stake *Bandigráha* (sacrilegious house-breakers), likewise those who steal horses and elephants, and also violent murderers."[4] Bṛihaspati:—"Having carefully ascertained who are notorious murderers, and likewise secret murderers, and having seized their effects, the king shall inflict death upon them by different modes of killing."[5] The same:—"When many persons filled with rage beat one single individual [to death], then he who strikes him on a vital part is declared to be the *Ghátaka* (murderer)."[6] Kátyáyana:—"He who commences a *sáhasa*, or aids it, so also he who points out the road, he who gives an asylum or furnishes weapons or food to evil-doers; so even he who advises a battle; he who sets [others] on destruction; he who stands aloof [*i. e.* renders no help to the sufferer in an affray]; he who speaks ill [of the dead]; he who approves [of the murderer's action]; or he who possessing the power does not prevent the offence—all these are participators in the deed. [The king] shall inflict on them suitable punishment proportioned to the power [of each to suffer]."[7]

Nárada lays down a special rule in regard to the punishment of a Bráhmaṇa:—"This is the law of punishment laid down for all without distinction save in the case of a Bráhmaṇa [offender deserving] death;

* [because] a Bráhmaṇa is [said to be] not liable to undergo
* ९९ capital punishment. His punishment shall be shaving of the head, banishment from the city, a brand of infamy on the forehead, and parading upon an ass."[8] A Bráhmaṇa, even though an *átatáyin* (a felon), is not liable to death; because of the text of Sumantu [which says]:—"There is no sin in putting to death persons guilty of felony,

---

[1] Mit. ch. ii., l. 81, p. 1; Vír. l. 152, p. 2; Vya. M.
[2] Vír. l. 153, p. 1; Kam.; Vya. M.
[3] Mit. ch. ii., l. 81, p. 1; Vír. l. 153, p. 1; Kam.; Vya. M.
[4] Vír. l. 152, p. 1; Kam.; Vya. M.
[5] Vír. l. 154, p. 1; Kam.; Vya. M.
[6] Vír. l. 154, p. 1; Kam.
[7] Vír. l. 154, p. 1; Kam.; Vya. M.
[8] Vír. l. 153, p. 2; Kam.

except kine and Bráhmaṇas."[1] Kátyáyana:—"According to Bhṛigu, there shall be no capital punishment in the case of a felon of the highest class devoted to austerities and to reading the Vedas. Capital punishment is for sinners who are of a low class."[2] The same author declares who are felons:—"He who [feloniously] uses a sword, poison, or fire; also he who raises his hand in imprecation, and he who kills by incantations [such as are found in] the *Átharvaṇa* [Veda], and also an informer to the king; one who [harasses] his wife by transgressing the law, who is diligent in picking out defects [of other people];—all these persons and the like of them are to be known as felons."[3] Vasishṭha also [says]:—"An incendiary and a poisoner, one who [offensively] handles weapons, who robs [another of his] wealth, also he who steals [another's] land or wife—these six are *átatáyins* (felons)."[4] As for the text of Manu [which says, ch. viii., v. 350]:—"Let a man without hesitation slay a felon who assails him [with intent to murder], whether [he be] the preceptor, or young, or old, or a Brahmaṇa deeply versed in the scriptures";[5] and as for [the text of] Kátyáyana [which says]:—"A felon coming with intent to take one's life should be killed, even though he [the felon] have gone through the Vedas; there will be no sin by that [act] of being the slayer of a Bráhmaṇa."[6] [The existence of the words] *vá* and *api* [in the above two texts] shows that they relate to the slaying of all felons except Bráhmaṇas. The mention of a Bráhmaṇa is [here] made to give force to the law by an extreme example. [This is explained] in the Mitákshará [as follows]:—"A felon even though a Bráhmaṇa is liable to be slain; how much more then [is] any other man;"[7] in accordance with [the following text of] Gálava [which says]:—"He who kills a learned Bráhmaṇa that feloniously attacks him with a raised weapon, does not become a Bráhmaṇa's murderer; did he not kill him, he would really be guilty of a Bráhmaṇa's murder;"[8] [and also] of the [text of] Bṛihaspati [which says]:—"He who kills a [*Bráhmaṇa*] felon versed in the Vedas, and come of a good family, does not commit a Bráhmaṇa's murder; did he not kill him, he would be guilty of a Bráhmaṇa's murder." [The following] is the conclusion [drawn from the above by] the [Smṛiti] Chandriká [on this subject]:—'A Bráhmaṇa felon coming to kill another is by all means to be slain. A Bráhmaṇa [however] who seizes the land or wife or any other thing of another, [and is so far a felon,] is not to be killed; while Kshatriyas and persons of the other classes in simi-

---

[1] Mit. ch. ii., l. 10, p. 1; Vír. l. 7, p. 2.
[2] Vír. l. 8, p. 1.
[3] Mit. ch. ii., l. 10, p. 2; Vír. l. 6, p. 2.
[4] Id.
[5] Vír. l. 6, p. 2.; Mit. ch. ii., l. 10, p. 1; Kam.
[6] Mit. ch. ii., l. 10, p. 1; Vír. l. 6, p. 2; Kam.
[7] Mit. ch. ii., l. 10, p. 1.
[8] Kam.

lar cases are to be killed.' This is correct; because the [preceding] texts from Manu, Kátyáyana, Gálava, and Bṛihaspati having reference to a particular felon [viz., one who is] intent upon killing, it is proper to take them as exceptions to the [aforesaid] general texts of Sumantu and Kátyáyana [in regard to a felon]. As for the [following] text of Bṛihaspati:—"He who will not kill a felon of the highest class, who performs austere acts of devotion and reads the Vedas, though deserving death, shall obtain the merit of [the performance of] a horse sacrifice;"[1] this [text] too has reference to a felon other than one intent upon killing the killer. Besides [by the text], "an excellent Bráhmaṇa acting feloniously should not be killed [even] in a just fight;"[2] the slaying of a Bráhmaṇa felon intent upon killing is forbidden in the Kali age. This prohibition in the Kali age would be unmeaning, if it [*i. e.* the slaying of a Bráhmaṇa felon] was not enjoined by law. Moreover, all works [on Dharmaśastra] declare all prohibitions in the Kali age to refer to acts [specifically] enjoined, [so as to give] the word *Dharma* (commandment) its proper meaning in [the text] "The wise declare these *Dharmas* (commandments) to be inapplicable in the Kali age."[3] Therefore in this Kali age a Bráhmaṇa feloniously seeking the life of another* is not to be killed [by that other]. * १२ In other ages, however, he was indeed [liable] to be killed. A Bráhmaṇa felon other [than one intent upon killing] is exempt from death in all ages; while felons of the Kshatriya and other classes are in all ages liable to be killed. This is the bare outline [of the subject].

Bṛihaspati declares the punishment for stealing articles of low, middling and great value thus:—"One destroying or carrying off implements of husbandry, or flowers, roots, or fruits, shall be fined a hundred or more *paṇas* according to his offence. In like manner, one destroying or stealing [inferior] animals, cloths, grain, liquids, and household utensils, shall be fined not less than two hundred *paṇas*. [In the case of] women, men, kine, gold, gems, and the property of the gods, of Bráhmaṇas, and of females [and other] costly things, the fine shall be equal to the value of the property stolen or destroyed. Or double the amount may be imposed by kings according to the [status of] the thief; or the thief may be [even] put to death with a view to the prevention of a recurrence [of the offence]."[4] *Yausheyam*

[1] Vír. l. 8, p. 2; Kam.

[2] Nirṇayasindhu, first half, Parichchheda iii., l. 62, p. 2, where it is said that Hemádri quotes this passage from Agnipuráṇa.

[3] Nirṇayasindhu, first half, Parichchheda iii, l. 62, p. 2, where this line is attributed to Bribannárada; Dharmábdhisára Parichchheda iii., first half, l. 62, p. 1.

[4] Vya. M.; Kam.

is *Stridhanam* [woman's property]. *Vá* means *eva* (by all means). According to Madana, looking to the proper meaning of the words *Vinásayan* (destroying) and *hartá* (robber), the [above] text belongs to the subject of *Sáhasa* (heinous offences) [and not to *steya* (theft)].

Yájñavalkya lays down the punishment for one who procures the commission of a heinous offence [ch. ii., v. 231]:—"He who causes the commission of a *Sáhasa* (a heinous offence) shall be made to pay a double fine; and he who does the same by saying, 'I will give [such a reward],' shall be made to pay quadruple the amount."[1] *Dvaiguṇyam* (double), or *chátwarguṇam* (quadruple,) means double or quadruple of the fine imposed on the actual offender. Manu lays down the punishment for him who by force enjoys a virtuous Bráhmaṇa woman [ch. viii., v. 378]:—"A Bráhmaṇa who enjoys a guarded Bráhmaṇa woman by force shall be fined a thousand [*paṇas*]."[2] But if the crime be committed against such a woman by a man of the Kshatriya or other class, Bṛihaspati [says]:—"The king should seize the whole of the property of one who enjoys by force [a woman], and having cut off his penis and scrotum cause him to be carried about upon an ass."[3] *Kámayet* [means] shall have connexion with the lawful wife of another. Kátyáyana imposes the following punishment for forcible enjoyment of a married woman of the same class by persons of the Kshatriya, the *Anuloma* (offspring of a mother married to a man of a higher class) and the *Pratiloma* (offspring of a mother married to a man of a lower class) classes:—"When a man has forcibly obtained enjoyment of a woman, capital punishment is to be inflicted in that case as it is a transgression of duty."[4] The same:—"A woman who has been enjoyed against her will should be kept in the house, with her person in a slovenly state sleeping on the ground, and furnished only with a mere morsel [*i. e.* bare maintenance]."[5] The same:—"She who has been enjoyed by a man of a low class is to be put away or to suffer death." Her death is to be understood in the case of her [previous] consent [to the guilty act]. Nárada thus declares the punishment of *Sáhasa* of the lowest, the middling, and the highest degree:—"The punishment for it must be in proportion to the crime. For [a crime of] the lowest degree, not less than a hundred [*paṇas*]; for one of the middling degree, not less than five hundred as declared by those versed in the law; for *Sáhasa* of the highest grade, the punishment is declared to be not less than a thousand [*paṇas*]. Capital punish-

[1] Vír. l. 153, p. 2; Vya. M.; Kam.
[2] Mit. ch. ii., l. 90, p. 1; Vír. l. 155, p. 2; Kam.
[3] Vír. l. 154, p. 2; Vya. M.; Kam. [4] Vír. l. 154, p. 2; Kam.; Vya. M.
[5] Kam.

ment, confiscation of everything (belonging to the criminal), banishment from the city, branding, amputation of [the offending] limbs—these are the punishments declared for the highest degree of *Sáhasa.*"[1] The command for inflicting capital punishment, mutilation, and the other punishments, however, [is given] to the king and to no other; since to him alone pertains the right of inflicting punishment. End of *Sáhasa* (a Heinous Offence).

---

## ADULTERY.

### [*Stri-Saṅgrahaṇa.*]

The punishment for forcible enjoyment of another man's wife being a [species of] *sáhasa* [a heinous offence] has already been declared. As regards the fraudulent enjoyment of another's wife of the same class, Bṛihaspati says:—"If a man by fraud enjoy [a woman], his punishment shall be the confiscation of his all, and afterwards banishment from the city with a brand of the *pudendum muliebre** * ९३ [on his body]."[2] *Sarvaharah* [is] that [punishment] which takes away the whole property. This punishment [applies in the case] of a woman of an equal class. In the case of one of a lower [class], the [punishment] is half of this, and of one of a higher [class], death. For, the same author [says]:—"The half of that punishment [which is to be] inflicted [for connexion] with a woman of an equal class is imposed in the case of a woman of a lower class. But for connexion with a woman of a higher class the punishment of the man is death." The same [author] lays down the punishments for the lowest, middling, and the highest [kinds of] adultery:—"The punishment in each of these three cases is respectively the lowest, the middling, and the highest fine. For forcible enjoyment in secret, even a greater [punishment may be inflicted]."[3] Manu lays down the punishment for a vagabond who converses with the wife of another man [ch. viii., v. 354]:—"A man before noted for vice who converses in secret with the wife of another shall pay the lowest amercement."[4] Yájñavalkya imposes the following punishment for conversation between a man and woman who have been both forbidden by their fathers or other [relatives] [ch. ii., v. 285]:—"A woman [erring after] being forbidden should be fined one hundred [*paṇas*], and a man [under similar circumstances], two hundred; where the prohibition [has been laid] on both, their punishment is the same as [that] for adultery."[5] The first distitch has reference to prohibition [laid on] either of the parties [only]; the last, to a [pro-

---

[1] Mit. ch. ii., l. 81, p. 1; Vír. l. 153, p. 1. [2] Vír. l. 155, p. 1.
[3] Vír. l. 155, p. 2. [4] Vír. l. 156, p. 1; Kam. [5] Id.

hibition] laid on both. Yájñavalkya declares the punishment for intercourse brought about through the [mutual] desire of both [ch. ii., v. 286]:—"[For intercourse with one] of an equal class the highest fine may be imposed; [with a woman] of a lower class, the middling [fine]; and [with one] of a higher class, death [in the case] of the man, and the lopping of ears or other [limbs] [in the case] of the woman."[1] Kátyáyana:—"In [the case of] all offences the woman shall pay half of the pecuniary fine which is laid down for a man. Where death [is ordained] for a man, a woman shall be mutilated."[2] With regard to intercourse with a Bráhmaṇa woman of loose life, Manu [says] [ch. viii., v. 378]:—"For intercourse with a willing woman, the fine shall be five hundred [*paṇas*]."[3] This relates to a woman of an equal class. On intercourse with women of a lower class and loose morals, the same [author says] [ch. viii., v. 385]:—"A Bráhmaṇa shall be fined five hundred [*paṇas*] for intercourse with an unguarded woman of the Vaiśya, Kshatriya or Śúdra class, and one thousand for [intercourse] with a woman of the tribe of *Antyaja*."[4] As for [the text of] Manu [ch. viii., v. 383]:—"A Bráhmaṇa having intercourse with a guarded woman [of the] two [classes, viz., Kshatriya or Vaiśya] shall be fined one thousand [*paṇas*]"[5] it refers to a virtuous woman. Manu declares the punishment of a Śúdra for intercourse with a woman of a higher class [ch. viii., v. 374]:—"A Śúdra having intercourse with a woman of a twice-born class, whether guarded or unguarded, shall lose the part [offending], and [further] his whole wealth when [she is] unguarded, and everything [including his life] when [she is] guarded."[6] The meaning is:—A Śúdra having criminal intercourse with an unguarded woman of a twice-born class, shall have his offending part cut off, and all his property confiscated; and when [she is] guarded he deserves the confiscation of his property and death. Gautama:—"For adultery with the wife of the preceptor, the man's offending part shall be taken away, and all his property confiscated; [and] if the woman be guarded, let him further suffer death." Manu [ch. viii., v. 376]:—"But if a Vaiśya or Kshatriya have intercourse with a Bráhmaṇa woman who is unguarded, the Vaiśya shall be fined five hundred [*paṇas*] and the Kshatriya a thousand."[7] The same [ch. viii., v. 377][8]:—"Both of them, however, if they commit that offence with a Bráhmaṇa woman who is guarded shall be punished like Śúdras, or be burnt in a fire of dry grass

---

[1] Vír l. 155, p. 2, Kam.; Vya. M. Vijñáneśvara refers this text to the case of a forcible connexion. Nílakantha in referring it to a connexion with consent is supported by the Vír.

[2] Vír. l. 155, p. 2.

[3] Vír. l. 155, p. 2; Kam.

[4] Kam.

[5] Vír. l. 155, p. 2; Kam.; Vya. M.

[6] Vír. l. 156, p. 1; Kam.

[7] Mit. ch. ii., l. 90, p. 2; Vír. l. 156, p. 1; Vya. M.

or reeds."[1] The same [ch. viii., v. 382]:—If a Vaiśyá have criminal intercourse with a guarded woman of the Kshatriya class, or a Kshatriya with [a similar] one of the Vaiśya class,* they both deserve the same punishment as in the case of an unguarded Bráhmaṇa woman."[2] The meaning is:—[The fine is the] same as that which is imposed for connexion with an unguarded Bráhmaṇa woman. Vasishṭha:—"If a Kshatriya have intercourse with a Bráhmaṇa woman, he should be tied with a bundle of long grass and thrown into the fire; the same [should be done] if a Vaiśya have sexual intercourse with a Kshatriya woman; and likewise if a Śúdra [commit the crime] with a woman of the Kshatriya or of the Vaiśya class."[3] Nárada:—"He who has criminal connexion with any one of [the following] women, [namely,] the mother, the mother's sister, the mother-in-law, the mother's brother's wife, the father's sister, the wives of a father's brother, a friend, and a pupil; a sister, her [*i. e.* sister's] friend, a daughter-in-law, a daughter, and the wife of the preceptor, every woman descended from the same family, any woman who has sought [the man's] protection, the king's wife, a *pravrajitá* (a female devotee), the [man's] nurse, a virtuous woman, and a woman of the highest class, is said to be a *gurutalpaga* (a violator of his religious preceptor's bed). No punishment save that of cutting off his secret parts is laid down for such a crime."[4] Yájñavalkya also [ch. iii., vv. 232, 233]:—"A man who has connexion with his father's sister or his mother's sister, or with his mother's brother's wife, and also with his [own] daughter-in-law, with his step-mother, his sister, so also with his preceptor's daughter, or his preceptor's wife, or with his own daughter, is a *gurutalpaga* (the violator of his preceptor's bed); his privy parts being cut off, capital punishment should be inflicted on him, and the same for the woman, if she were consenting to the act."[5] This punishment however is not to be inflicted on Bráhmaṇas; for among the texts of Bṛihaspati referring to Bráhmaṇas, we find:—"One [Bráhmaṇa] who has been guilty of committing adultery with another man's wife should be punished by painful brands and banished. One, not a Bráhmaṇa, doing the same guilty act, deserves any punishment up to death." Śankha and Likhita say:—"With whatever member any particular offence is committed, that very member should be cut off except [in the case of] a Bráhmaṇa." Yájñavalkya declares the punishment of a Bráhmaṇa

* ९४

[1] Mit. ch. ii., l. 90, p. 2; Vír. l. 155, p. 2; Kam.; and Vya. M. See Kullúka's comments on this verse.

[2] Vír. l. 156, p. 1; Kam.; Vya. M. [3] Kam.

[4] Mit. ch. ii., l. 90, pp. 1, 2; Vír l. 156, p. 2; Kam; Vya. M.

[5] Kam.; Vya. M.

having connexion with a female slave or the like [ch. ii., v. 290]:—"A man [having intercourse] with an *avaruddhá* (protected female slave) and *Bhujishyá* (another's mistress), shall be required to pay a fine of fifty *paṇas*, even though intercourse with them be [in other respects] permissible."[1] *Avaruddháh* [means] female slaves forbidden by their master to have intercourse with other men. Nárada:—"An unchaste [married] woman [who is] not [of the] Bráhmaṇa [class], or a professional prostitute, a female slave, who has left the family [protection], may be carnally known by a man of the same or a higher class; but] not by a man of a lower class. But if such women be the kept mistresses [of some persons], the offence [of approaching them] would be that [of approaching] another man's lawful wife."[2] The word *Abráhmaṇí* [in the text] is an adjective qualifying the word *Svairiṇí*. *Svairiṇí* [means] an unchaste woman [who is her] own mistress. *Nishkásiní* [means] an unchaste woman who has left the family. Yájñavalkya [ch. ii., v. 274]:—"If a man have connexion with an *Antyá* woman he should be branded with an obscene mark, and banished. If a Śúdra [act in such a manner], he is similarly liable to be branded. But if an *Antyá* have connexion with a woman of any of the four classes of Aryas, he shall be put to death."[3] The punishment for an indecent assault committed by a woman is thus declared by Nárada:—"That female who going to a [man's] house, excites him by tickling him or the like, and so causes him to have intercourse with her, should be punished, as declared [by sages], in half the fine prescribed for a man [guilty of like conduct]."[4]

Yama prescribes the punishment for women of the Bráhmaṇa and other classes who have criminal connexion with a Śúdra or the like. "A Bráhmaṇa woman who, overpowered by desire, seeks [the company] of a *Vṛishala*, should be caused by the king to be devoured by dogs at the place of the executioners. A Bráhmaṇa woman who has intercourse with a Vaiśya, or even a Kshatriya, shall have her head shaved, and shall be carried about upon an ass."[5] *Vṛishala* [means] a Śúdra, *Vadhyaghátinah* [means] executioners; at their place [the execution is to take place]. This punishment, according to the Chandriká, is for excessive attachment [to the paramour]. Yájñavalkya points out the means of determining [the act of adultery] (ch. ii., v. 283):—"A man should be caught in the very act of adultery; or while holding each other's hair, or by other signs of excitement, or by the admission of both."[6] From the expression *dvayoh* (of both) there is no proof of

[1] Vír. l. 156, p. 2; Kam.; Vya. M.
[2] Mit ch. ii., l. 91, p. 2; Vír. l. 156, p. 2; Kam.; Vya. M.
[3] Vír. l. 157, p. 1.
[4] Vír. l. 157, p. 2; Kam.
[5] Kam.
[6] Vír. l. 155, p. 1; Kam.; Vya. M.

adultery upon the confession of one only. As regards slander says Yájñavalkya [ch. ii., v. 289]:—"He who utters a [true] slander against an [unmarried] woman shall pay a hundred (*paṇas*), but for a false accusation [he shall pay] two hundred. For connexion with a beast he shall be made to pay a hundred, and the middling fine for connexion with a distressed woman or a cow."[1] Moreover [ch. ii., v. 293]:—"If a man have intercourse with a woman in an improper part, or make water, or void excretion [before women], he shall be fined twenty-four *paṇas*;* so also he who has connexion with a female devotee."[2] *Dínám* [means] distressed, even one's own wife. 10

* १५

The meaning of *abhimehatah* (of one making water) is that of him who shall perform his evacuations or the like before a woman. End of 'Adultery.'

## DUTIES OF MAN AND WIFE.

(*Strí-pun-dharmah.*)

Now the punishment for a husband who abandons a virtuous wife, is thus declared:—"The husband who abandons a wife that is obedient, not evil-tongued, dexterous [at her duties], virtuous and devoted to her husband,[3] shall be restrained with a fine by the king."[4] Yájñavalkya [ch. i., v. 76]:—"He who deserts a wife [that is] obedient to his 20 commands, diligent [at her duties], mother of an excellent son, and speaking kindly, shall be compelled to pay the third part [of his wealth to her]; or if poor, to provide maintenance for her."[5] The same author says with respect to a wife [ch. i., v. 77]:—"Wives should do the bidding of their husbands. This is the highest duty of a wife. Even if he be tainted with a primary sin, yet let her wait until he be purified." End of 'Duties of Man and Wife.'

## GAMBLING AND PRIZE-FIGHTING.

(*Dyútasamáhvayau.*)

Yájñavalkya [ch. ii., v. 201]:—"[Payment of] that which has been 30 won publicly in an assembly of gamesters in the presence of the master of a gaming house, and when the king's share has been paid, shall be enforced, but not otherwise."[6] *Prasiddhé* [means] not in secret. *Dhúrta-maṇḍale* [means] in a gaming house. *Sabhikah* [means] a superinten-

[1] Vír. l. 157, p. 1; Kam.; Vya. M. [2] Vír l. 157, p. 2; Kam.; Vya. M.

[3] Vír. here reads *prajávatím* (with issue) instead of *pativrátám* (devoted to her husband) (l. 159, p. 2).

[4] Vír. l. 159, p. 2; Kam.; Vya. M. where this text is attributed to Nárada.

[5] Vír. l. 159, p. 2; Vya. M. [6] Vír l. 224, p. 1; Kam. and Vya. M.

dent of gambling appointed by the king. The meaning is that the king should cause to be paid whatever was won under the [just mentioned] circumstances, and nothing else. The same [author] lays down the punishment for one guilty of fraud in gambling [ch. ii., v. 202]:—"A man who plays with false dice or by deceit, shall be branded and banished by the king."[1] *Upadhíh* means] fraud. Manu declares the punishment for gambling without permission from the king [ch. ix., v. 224]:—"The king should punish all those who [themselves] gamble or cause [others] to gamble whether with inanimate or animate things, and the Śúdras who adopt the marks of the twice-born."[2] *Dṿijalingam* (the marks of the twice-born) is [wearing] the sacred thread, reading the Vedas, or the like. Yájñavalkya thus declares the law of gambling (*dyúta*) to apply to prize-fights [ch. ii., v. 203]:—"This very law should be understood to apply in the case of *Samáhvaya* (prize-fighting.)"[3] The [term] *práṇi-dyúta* (gambling with animals) is an adjective qualifying *Samáhvaya*, and means the same thing. End of 'Gambling and Prize-fighting.'

## MISCELLANEOUS.

(*Prakírṇakam.*)

Yájñavalkya [ch. ii., vv. 295 and 296]:—"He who either omits or adds anything in writing to the king's edicts, or he who allows an adulterer or a thief to escape [shall suffer] the highest amercement.[4] He who defiles a Bráhmaṇa, a Kshatriya, a Vaiśya, or a Śudra by feeding him with things not fit to be eaten,* shall be [respectively] * ९६ amerced with fine for the highest, the middling, and the lowest Sáhasa (a heinous offence) and [half of the last]." *Abhakshyam* (things not fit to be tasted), *i.e.* intoxicating liquors, urine, fæces, and the like. The same [ch. ii., v. 297]:—"He who deals in false gold [as pure], and he who sells unclean meat, should be maimed and compelled to pay the fine for the highest *sáhasa* (heinous offence)." *Vimámsam* (unclean meat) [as] the flesh of cows and the like. According to the Mitákshara, [ch. ii., l. 93, p. 1] by the use of the particle *cha* (and), mutilation is also [intended]. Also [ch. ii., v. 300]:—"The master of any animals whether possessed of teeth or horns, who, having the power, still fails to relieve [any one in pain from it when attacked], shall be fined in the lowest amercement, and in double [that amount] if the sufferer likewise cry out [for help] beforehand." *Vikrośah* [means] crying out. Manu [ch. viii., vv. 296, 297, and 298]:—"For killing a man, a fine equal to that for theft shall be instantly imposed, half that

[1] Vír. l. 224, p. 2; Vya. M. [2] Vír. l. 224, p. 2; Kam. and Vya. M.
[3] Id. [4] Vír. l. 225, p. 1; Kam. and Vya. M.

amount for large animals such as a bull or cow, an elephant, a camel, a horse, and the like; for killing very small animals, the fine shall be two hundred [*paṇas*], and fifty for handsome quadrupeds or birds. For an ass, a goat, or a sheep, the fine shall be five *máshakas;* and one *máshaka* for killing a dog or a boar." This fine must be understood to be over and above the payment of the value of the [animal] killed. Yájñavalkya [ch. ii., vv. 301, 302]:—"He who charges a gallant as a thief, shall be made to pay five hundred [*paṇas*] as a punishment. For him who taking money [from an offender] lets him go, eight times its amount is ordained [as the fine]." *Upajívya* means having received. "The king should banish, after cutting out his tongue, that man who imprecates evil against him, who calumniates him, or who divulges his secret counsels." *Anishṭam* [means imprecates] his death, or the like. *Ákrosá* (abuse) [such as] saying, 'May thy reign not last', or the like. Manu [ch. ix., v. 275] :—Men who rob the king's treasure or [obstinately] oppose his commands, and those who help his enemies, shall be punished by various modes of punishment."[1] Yájñavalkya [ch. ii., v. 303] :—"The punishment of him, who sells what was on a dead body, and likewise of him who strikes his preceptor, and of him who seats himself in the king's carriage or throne, is the highest amercement (*uttama Sáhasa*)." *Mṛitángalagnam* [means] what is on a dead body [such as] the clothes of the dead or the like. The same [ch. ii., v. 304]:—"The punishment of him who puts out both eyes [of another], who performs acts forbidden by the king, or who being a Śúdra lives as a Bráhmaṇa, shall be eight hundred (*paṇas.*)"[2] The meaning is [the punishment abovementioned is] for him who puts out both the eyes [of another], for him who does an act prohibited by the king, and for a Śúdra who lives by the profession of a Bráhmaṇa. According to the Mitáksára [ch. ii., l. 94, p. 1], which quotes another Smriti:—"If he [*i. e.* the Śúdra] assumes the sacred thread for taking food at a Śráddha, he shall have a line resembling the sacred thread imprinted [on his body] with a red-hot rod."

The same author propounds the punishment for those who make unjust decisions [ch. ii., 305, 306] :—"An unjust decision should be revised by the king and the *sabhyas* (assessors), together with the person in whose favour it was given should be fined in twice the amount [in dispute]. If a man, though he have justly lost his cause, thinks, 'I am not [justly] conquered,' and again come into court, he when again nonsuited shall be made to pay a double fine."[3]

Here [*i. e.* in this work], where mere number is mentioned without the object [to which it refers], it must be understood to refer to *paṇas.*

[1] Vír. l. 255, p. 2; Kam; Vya. M. The fourth quarter of this text as quoted by the Víramitrodaya is हरेत्सर्वस्वमेव च (have his whole property confiscated).

[2] Kam. and Vya. M. [3] Kam.

The *paṇa* is a copper piece equal in weight to the *Karsha* [of 16 *máshas*], from this verse in the dictionary, "A *paṇa* is made of copper of the *Karsha* [weight]."[1] A Karsha is the fourth of a *pala*. And a *paṇa* is thus defined by Bháskarácharya,—"A *Kákiṇí* is twice ten *Kauris*, and four *Kákinís* make a *paṇa*."[2]

Now, as regards the *Uttamasáhasa* (highest fine) and other fines:—"The *Uttamasáhasa* (the highest fine) is a fine of one thousand and eighty paṇas; the *madhyama sáhasa* (middling fine) is pronounced to be half of it, and the half of that [again] is declared the *adhama sáhasa* (the lowest)." Moreover, if in any of the aforementioned crimes, repression is not attainable by fines regulated after the above specified scale, even a greater fine may be imposed. For, says Ápastamba:—"*Daṇḍa* (punishment) is so called because it represses [a culprit]; therefore those unrepressed by the [fine already inflicted] should be brought into subjection."

Again, Nárada points out some exceptions in the punishment of confiscation of a man's all:—"Even when confiscation of all that a criminal possesses is enjoined, it is not fit that the king should take away his weapons, if a soldier, the beasts of burden or other (conveyance) of those who subsist by carrying for hire; the ornaments of professional prostitutes; the musical instruments of musicians, or those implements by which artizans subsist; in short, anything* by which any person gains his livelihood."[3]

* ९७

Yájñavalkya [ch. ii., v. 307] declares what is to be done with a fine levied unjustly:—"What has been obtained through injustice by the king as a fine, should be devoted by him to Varuṇa, and given with his own hands to Bráhmaṇas on being increased thirty-fold. The meaning is, 'let him give thirty times as much to Bráhmaṇas, having vowed it to Varuṇa under a ritual.' End of the 'Miscellaneous.'

---

In the middle regions, famed for [good] acts, in the vicinity of the auspicious confluence of the Charmaṇvati and the Yamuná, [stands] the famous city of Bharáa, whereof the [reigning] king is Bhagavantadeva, devoted to the lotus-eyed [*i. e.* God].

Thus ends the Vyavahára Mayúkha (the ray relating to municipal law) of the *Bhagavadbháskara* (the sun) composed by Bhaṭṭa Nílakaṇṭha, son of Śankarabhaṭṭa, who was the jewel of learned men, the head of those who have travelled over the Mímánsá [ocean] from one end to the other, and son of the learned Bhaṭṭa Náráyaṇa, the preceptor of the whole world, [compiled] under the orders of Śrí Bhagavantadeva, who is the lord of kings, and an ornament of the progeny of Sagara.

---

[1] Amarakośá, *Káṇḍa* ii., *Varga* ix., v. 88.

[2] Lílávatí, v. 2.

[3] Vír. l. 225, p. 2; Kam.; Vya. M.

# YÁJÑAVALKYA—DHARMAŚÁSTRAM.

## (INSTITUTES OF YÁJÑAVALKYA.)

## ÁCHÁRÁDHYÁYA.

### CHAPTER [I] ON RELIGIOUS AND MORAL OBSERVANCES.

SALUTATION TO GAṆEŚA !

[Introduction.]

1. The *Munis*[1] having worshipped Yájñavalkya, the lord of *Yogins*,[2] said, 'tell us completely the *dharmas* (duties) of the classes, orders, and the mixed.'[3]

2. That chief of the *Yogins*, resident of Mithilá,[4] having meditated for a moment, spoke to the sages [thus] : 'know [that] the duties [which I am going to describe relate] to the country where the black antelope[5] [lives].'

[1] The thoughtful.

[2] *Yogi*, one who has subdued his passions. Vijñáneśvara calls him the chief of Sanaka and other sages ; but Sanaka and others appear in the *Kṛita yuga* or first age of Hindu history ; whereas Yájñavalkya, the author of the present *Smṛiti*, appears to have lived at a much later age. He is sometimes styled *Yogi* and sometimes *Yogíndra*.

[3] By classes is meant :—1, Bháhmaṇas ; 2, Kshatriyas ; 3, Vaiśyas ; and 4, Śúdras. Orders signifies the four stages of the life of a twice-born Árya, namely, those of Brahmachárin (or student), Gṛihastha (or householder), Vánaprastha (or the hermit), and Sannyásí (or the retired sage) : "the mixed" means according to the Mitákshará the mixed classes, who are beyond the pale of the four regular classes and the four orders ; and whom the author calls *itara* or the others. The present law is thus limited to the above classes and orders, and the mixed classes of two sorts, viz., the *anuloma* and the *pratiloma*, or the issue of mixed marriages in the direct and inverse order of the classes respectively.

"वर्णाश्रमेतराणां" is a compound of वर्ण, आश्रम, and इतर. And as इतर is a pronoun, its sixth case would be इतरेषां. But in the case of a द्वन्द्व, Páṇini ch. i., quarter i., *Śutra* 31, "द्वन्द्वेच" would treat such pronouns like ordinary substantives.

[4] See Bṛihatsamhitá p. 88 (ch. xiv., v. 6,) where the Maithila country is described, of which Mithilá is the capital. He was the spiritual preceptor of Janaka, the king of Mithilá, and discoursed on various religious topics in the Bṛihadáraṇyaka-Upanishad. He is the *Ṛishi* of the White-Yajurveda.

[5] This animal is described to be indigenous to the country of the *Áryás*. In the text it is stated to be the *Krishṇa mṛiga* (the black antelope). Vijñáneśvara translates it into *Krishṇa-sára*. Śankarabbaṭṭa in the preface to the Vratárka cites Manu (ch. ii.,

3. The *Vedás*, along with the *Puráṇas*, the *Nyáya*, the *Mímánsá*, the *Dharmaśástras*, and the *Angas* are the fourteen seats [or sources] of knowledge and duty.[1]

4—5. Manu, Atri, Vishṇu, Hárita, Yájñavalkya, Uśanas, Angiras, Yama, Ápastamba, Samvarta, Kátyáyana, Bṛihaspati [4],

Paráśara, Vyása, Śaṇkha, Likhita, Daksha, Gotama, Śatátapa, and Vasishṭha; these are the propounders[2] of the *dharmaśástra* [5].

---

v. 23) thus: कृष्णसारस्तु चरति मृगो यत्र स्वभावतः। स ज्ञेयो यज्ञियो देशो म्लेच्छदेशस्त्वतःपरः ॥ which means "That country should be known as fit for sacrifices, where the black antelope spontaneously roams; a country other than that is one of *Mlecchas*;" and says that the country to the west of the Sindhu (*i. e.* the Indus) is to be excepted from the countries fit for performing sacrifices. The *Aryás* have always considered this animal as the purest. At the time of the *Upanayana* ceremony of a Bráhmaṇa, the skin of the black antelope must be worn: see *Manu* ch. ii., v. 41. Prayogaratna by Náráyaṇa Bhaṭṭa, [प्रावरणार्थं कृष्णाजिनं वा. Translation:—For wearing, the skin of the black antelope or]. Ápastamba cited by Kulúkabhaṭṭa says कार्ष्णं ब्राह्मणस्य (to the Bráhmaṇa, the skin of the black antelope). Áśvalayana recommends the skin of the antelope, without qualifying it as black. Among the sixteen great *dánas* or things to be bestowed on Bráhmaṇas, the skin of the black antelope is one. In the *Soma* sacrifice, the horn of the black antelope is recommended for the purpose of scratching during the time of the sacrifice, so that the hand may not contract any impurity during that process.

[1] The fourteen sources are the four *Vedas*, (*Rik*, *Yajuh*, *Sáma*, and *Atharvá*,) the *Puráṇas* (beginning with the Bráhma), the *Nyáya* philosophy of Gautama, the *Mímámsá* philosophy of Jaimini and Vyása, the *Dharmaśástras* (beginning with that of Manu), and the *Angas* or six complements of the Vedas [that is *Śikshá*, *Kalpa*, *Vy-ákaraṇa* (or grammar) *Nirukta*, *Jyotisha* (or astronomy), and *Chhandas* (or prosody)].

See *Śikshá*:— "छन्दःपादौ तु वेदस्य हस्तौ कल्पोऽथ पठ्यते ॥ ज्योतिषामयनं च चक्षुर्निरुक्तं श्रोत्रमुच्यते॥ शिक्षा घ्राणं तु वेदस्य मुखं व्याकरणं स्मृतं॥ "

Translation:—*Chhandas* [is] described as the two feet of the *Veda*, the *Kalpa* [sutras or aphorisms], as the two hands; [while] the *Jyotisha* (or the science of the heavenly bodies), [is] said [to be] the eyes, and the *Nirukta* the ears; the *Śikshá* [is] spoken of as the nose, [and] the *Vyákaraṇa* (or grammar) as the mouth.

[2] The word *in* the original is *Prayojakáh* (प्रयोजकाः) which some lexicographers would render by 'law-givers' (see Monier Williams' new Sanskrit and English Dictionary, p. 640). But *prayojakáh* signifies the causer or propounder, the person who causes another agent to act. See Śabdastomamahánidhi by Táránáth Tarkaváchaspati Bhaṭṭáchárya: p. 278. (प्रयोजक.—त्रि० कार्य्यादौ भृत्यादीन् प्रयुङ्क्ते, 'प्र × युज् —ण्वुल्, निकृष्टस्य भृत्यादेः प्रेरके ॥ व्याकरणोक्ते हेतुसञ्ज्ञे कर्तरिच ॥ ). And it seems that it would be better to consider Manu and the rest rather as the causers, than as the actual writers of the *Smritis* which bear their names. For, to begin with the list, Manu himself is the *prayojaka* or the causer, and Bhṛigu, the author of the Smriti which bears Manu's name. Each chapter of Manu ends thus:—मानवे धर्मशास्त्रे भृगुप्रोक्तायां संहितायाममुकाध्यायः which means "[Here ends] a certain Adhyáya (chapter) of the *Samhitá* (text) composed by Bhṛigu in the *dharmaśástra* (a legal treatise) of Manu." In the case of the *Paráśara* Smriti also, Suvrata is the author, and Paráśara is evidently the sage at whose command the work was composed. Thus:—त्रिभिः श्लोकसहस्रैस्तु त्रिभिर्वृत्तशतैरपि। पराशरोदितं शास्त्रं सुव्रतः प्रोक्तवान्मुनिः॥ This is the reading found in the Calcutta

6. Things given from [motives of] faith, in the [proper] country, at the [proper] time, by the ways [prescribed by the Śástras,] to a proper person are the cause of *Dharma* [or virtue].[1]

7. The source of *Dharma* is described to be [1] the *Vedás*, [2] the *Smṛiti*, [3] the practice of good men, [4] what is acceptable to one's own soul, and [5] the desire produced by a virtuous resolve.[2]

---

edition of the Smṛitis by Pandit Jibánanda. An old MS. in my possession gives the latter hemistich as 'पराशरोदितं धर्मशास्त्रं पोवाच सुव्रतः। The meaning is :—"The sage Suvrata composed the *dharmaśastra* (a treatise on law) in 3300 verses as propounded by Paráśara."

In the case of the *Yájñavalkya* Smṛiti also, *Yajñavalkya* cannot be the author of the Smṛiti ; for, the writer begins it by invoking Yájñavalkya (see *Śloka* 1st), and in the above enumeration again, the fourth law-giver is stated to be Yájñavalkya. The author of the *Mitákshará* again in his comments puts him at the top of Sanaka and other *Yogis* of the *Kṛita* age. He therefore places him far into a remote antiquity.

It seems therefore that the *Smṛiti* is the collection of the precepts of Yájñavalkya by a follower of his school. This conclusion is also suggested by Mitramiśra in his work entitled the Víramitrodaya.

Vijñaneśvara in his commentary on the first verse says :—याज्ञवल्क्यशिष्यः कश्चित्प्रश्नोत्तररूपं याज्ञवल्क्यप्रणीतं धर्मशास्त्रं संक्षिप्य कथयामास। यथा मनुनोक्तं भृगुः। which means "some disciple of Yájñavalkya composed [the present treatise] by condensing the jurisprudence propounded [to him] by Yájñavalkya in the form of question and answer."

[1] See Bhagavadgíta ch. xvii., v. 20 'देशे काले च पात्रे च तद्दानं सात्विकं स्मृतम्.' This seems to be the authority adopted here by Yájñavalkya.

Hemádris Chaturvarga Chintámaṇi, Dánakhaṇḍa (vol. I. pp. 14, 15) thus discusses the six essentials of *dána* (gift) from which virtue arises :—दाता प्रतिग्रहीता च श्रद्धा देयं च धर्मयुक्। देशकालौ च दानानामङ्गान्येतानि षड्विदुः॥ अपापरोगी धर्मात्मा दित्सुरव्यसनः शुचिः। अनिन्द्याजीवकर्मा च षड्विधो दातृ उच्यते॥ त्रिशुक्लः कृशवृत्तिश्च घृणालुः सकलेन्द्रियः। विमुक्तो यो निदोषेभ्यो ब्राह्मणः पात्रमुच्यते॥ सौमुख्यायतिसम्प्रीतिरर्थिनां दर्शने सदा। सत्कृतिश्चानसूया च तदा श्रद्धेति कीर्त्यते॥ अपराधमक्लेशं प्रयत्नेनार्जितं धनम्। स्वल्पं वा विपुलं वापि देयमित्यभिधीयते॥ यत्र यत्र दुर्लभं भद्रं यस्मिन् काले ऽपि वा पुनः। दानार्हौ देशकालौ तौ स्यातां श्रेष्ठौ न चान्यथा॥

"The giver, the receiver, faith, [the thing] to be given according to law, the place, [and] the time—these are known to be the six constituents of gift.

"That giver is approved of, who is not [afflicted with] a bad disease, who has a desire to give, who is in no difficulties, who is pure, and who lives by blameless work.

"That Bráhmaṇa is declared [to be] a proper recipient [of a gift], who is pure in three [things, viz., learning, birth and conduct of life], whose means are limited, who is humane, who has no defective sense, and who is free from the vice of lechery.

"Faith is said then [to exist] when [the giver] is always courteous and highly pleased on seeing mendicants, receives [them properly] and does not carp [at them].

"That wealth, whether small or great, which is earned with [honest] labour, which brings no compunction and does not injure another, is said to be [a proper object of] gift.

"That place and that time are the best for gift, where and when [respectively, the thing given] is hard to get and desirable."

[2] See Manu, ch. ii., v. 12 :—

श्रुतिः स्मृतिः सदाचारः स्वस्य च प्रियमात्मनः।
एतच्चतुर्विधं प्राहुः साक्षाद्धर्मस्य लक्षणम्॥

which means "The source of *Dharma* is fourfold—[*viz.*] the Veda, the Smṛiti, the

8. Of all acts—[such as] sacrifices, ceremonial observances, repression of sensual desires, harmlessness, gifts, and the study of the *Vedás*, this is the best *dharma*, [namely] viewing one's own self by [means of the] *Yoga*[1] (abstraction).

9. Four [men] versed in the duties prescribed by the *Vedás*,[2] or versed in the three sciences [constitute] an assembly.[3] What it speaks, is *dharma*; or that which one, the best self-knower,[4] [speaks].

---

practice of the good, and what is acceptable to one's soul." The same thus speaks of the Vedás and Smṛitis (ch. ii., v. 10) :—

श्रुतिस्तु वेदो विज्ञेयो धर्मशास्त्रं तु वै स्मृतिः।
ते सर्वार्थेष्वमीमांस्ये ताभ्यां धर्मो हि निर्बभौ॥

"[The term] *Śruti* refers to the Vedas, and *Smṛiti* to *dharmaśástra* (a treatise of law). They should not be called in question in any matter, for the *Dharma* (duties) was elucidated by them." And again about *Sadáchára* or the practice of good men [ch. ii., vv. 17, 18] :—

सरस्वतीदृषद्वत्योर्देवनद्योर्यदन्तरम्।
तं देवनिर्मितं देशं ब्रह्मावर्तं प्रचक्षते॥
तस्मिन्देशे य आचारः पारम्पर्यक्रमागतः।
वर्णानां सान्तरालानां स सदाचार उच्यते॥

"That country being created by God is termed *Brahmávarta*, which lies between the rivers Sarasvati and Dṛishadvatí. The usages of [the four] classes and the mixed [classes] living in that district, which are handed down from generation to generation, are termed the usages of the great." About what is acceptable to one's soul, Vijñaneśvara observes that this consultation of one's own mind is to be made only in the case of optional performances; as for instance when the question is whether the investiture with the thread is to be performed in the eighth year of the boy from birth or from conception (Mit. ch. i., l. 2, p 1.)

[1] "योगश्चित्तवृत्तिनिरोधः॥" (See the Sarvadarśana-saṅgraha, p. 154.)

"*Yoga* is the concentration of the powers of the mind." See the *Pátanjala Yoga-Sútram* (p. 1) for the comments on this aphorism. See further on (ch. iii., vv. 147 and 148) where the author describes Yoga in the section on *Adhyátma* or self-knowledge.

[2] As to who are *Traividya*, Manu says [ch. xii., v. 112] :—ऋग्वेदविद्यजुर्विच्च सामवेदविदेव च। त्र्यवरा परिषज्ज्ञेया धर्मसंशयनिर्णये॥

"That *parishat* (assembly) is enjoined in deciding disputes about *Dharma* (duties), [which consists of] not less than three men knowing the *Rich*, *Yajush*, and the Sáman Vedás."

[3] As to a *parshat* or assembly, see Manu, ch. xii., vv. 110 to 114. Yájñavalkya makes the assembly to be पर्षत्, while Manu makes it परिषत्. The constitution of the law-giving assembly is somewhat differently laid down in these two works. The *Mitákshará* makes it consist of four *Bráhmaṇas* learned in the *Vedas* and *Dharmaśatras*, and holds "the three" in the above verse to mean "a concourse of three who have studied the three sciences" without defining those sciences.

[4] What is *Adhayátma-vidyá* or self-knowledge, Yájñavalkya describes in ch. iii., vv. 126 to 205. The "one priest" described in Manu ch. xii., v. 13 is evidently the same as the *adhyátmavittamah* in the above verse. On this subject Bṛihaspati says :—"लोकवेदज्ञधर्मज्ञाः सप्त पञ्च त्रयोऽपि वा। यत्रोपविष्टा विप्राः स्युः सा यज्ञसदृशी सभा"; translation: "where seven, five or three Bráhmaṇas versed in the Vedás and *Dharmás* (duties) are sitting,

10. The 1, Bráhmaṇa;[1] 2, Kshatriya; 3, Vaiśya; and 4, Śúdra:—[these are] the classes; and [of these] the three [first] are *dvijas*[2] or twice-born. Their ceremonies from conception to the funeral [are performed] with *Mantras*.[3]

11. In season, the ceremony of *Garbhádhán* or conception; before the quickening, the ceremony of *Pumsavana*, or that which creates the male; in the sixth or eighth month, the *símanta* ceremony or parting of the hair; at birth, the *Játakarman* or ceremony of birth.[4]

12. On the 11th day [after birth] *Námakaraṇa*[5] (or naming rite); in the fourth month, *nishkramaṇa*[6] or "taking out [the child to see the sun or the moon]"; in the sixth [month], *annaprásana*[7] or eating boiled rice; *chúḍákarman*,[8] or tonsure right to be performed according to family custom.

13. In this manner, the sin produced from the seed and the womb is destroyed.[9] These rites [are performed] silently[10] for women; their marriage however [is performed] with *Mantra* texts.

14. The *upa-nâyana*[11] (or carrying near to the preceptor for investiture with the sacred *mantra*) of a *Bráhmaṇa* [is to be performed]

---

it is equal to a sacrificial assembly." See Borrodaile's translation, Stokes' H. L. Books, p. 13.

[1] See the Mahábhárata, Vanaparva, Náhushákhyána.

[2] From *dvi*, two, and *jáyate*, is born. See Manu ch. ii., v. 169.

[3] *Mantra* signifies *Veda* or *Smṛiti* texts. The ceremonies of the Śúdras are to be performed with Puráṇik texts.

[4] See v. 79 of this chapter, and Manu ch. iii., vv. 45, 47, with Kullúkabhaṭṭa's comments thereon.

[5] See Manu ch ii., vv. 30, 33. [6] Id. v. 34. [7] Id.

[8] Id., v. 35. The head of the child is all shaved, save one, two, three, four, or five locks of hair which are left, and these are the *Chúḍá* or locks. The number of the locks depends upon the *pravara* of the child. See above, vv. 3 and 7, where among the sources of the law laid down, family custom is not to be found, whereas its binding force is here expressly recognized.

[9] Manu ch. ii., v. 27. [10] See *supra*, v. 10, p. 5.

[11] *Upanáyana* or *upanayana* means bringing near. The student is brought near the preceptor who instructs him in the *Gáyatri*, the sacred Vedic verse, to make him fit to receive instruction in the Vedás. *Upanayana* is the correct word according to grammar, but most Smriti writers make it *upanáyana*, and Bhaṭṭojídíkshita, in his comments on the twenty-four *Smritis*, defends the latter at great length; but Samskárakaustubha says that *upanayana* is the idiomatic word, and its principal part consists in initiation with the *Gáyatri*, and its secondary portion consists in taking the pupil to the teacher. Aparárka in his commentary on Yájñavalkya defines it as the connecting of the pupil with the *Gáyatri* by the *A'chárya*.

in the eighth year from the time of conception or birth; of *Kshatriyas*[1] in the eleventh; of *Vaisyas* in the twelfth year. Some [sages maintain that it should be performed] according to family custom. [2]

15. To the student led to the preceptor [for learning the Veda], the Veda is to be taught, and the purificatory rites to be taught preceded by the great *Vyáhṛiti*[3] texts.

16. During the day, and during the morning and evening twilight, the urine and the fœces are to be voided, facing the north, and with the sacred thread on the [right] ear; and at night facing the south.

17. Rising with the male-generative organ [in one hand], purification, destructive of stink sticking to the body, is to be attentively made with earth and uplifted waters.

18. [He] is to sit facing the north, or the east with the hands between the knees, in a clean spot; a twice-born is daily to sip the water of *Bráhma-tírtha*.[4]

19. The beginning of little finger is the *Prajápati-tírtha*, that of the index is the *Pitṛi-tírtha*, that of the great finger the *Bráhma-tírtha*, and the end of the hand is the *Deva-tírtha*.

20. Water should be thrice drunk; [the mouth] should be twice cleared; the [nose, ears, and eyes, these three] holes should be touched with water. The waters should be in the natural pure state free from foam and bubbles.[5]

21. The twice-born become pure by [waters] reaching the heart, the throat, and the palate, respectively.[6] Women and Śúdras become pure, [directly the waters] onee reach the palate.

---

[1] The word used is *rájan* (king), which here is significatory of the *kshatriya* or military class.

[2] See Manu ch. ii., v. 36. Manu in the next verse (37) gives other periods; and lays down the proper time for a Bráhmaṇa, to be the eighth year from conception. Different Smṛitis lay down different periods for *upanayana* from the 5th to the 16th year; but the 8th year is the one accepted by most; and Áśvaláyana in his *Gṛihya Sútras* adopts the same. See the texts of Paiṭhínasi, Uśanas, Baudháyana, Ápastamba, Vishṇu, in the section on Upanayana in the Prayogaratna and the Samskára-Kaustubha. The opinion of most Smṛiti and Gṛihya writers appears to be that the *upanayana* of a Bráhmaṇa should be performed in the eighth year from conception. Vijñáneśvara appears to suggest that where two Smṛitis differ, both may be obeyed.

[3] *Mitákshará*, on the authority of Gautama, lays down the number of these texts to be seven.

[4] As to what is a *Bráhma-tírtha*, see the next verse, which lays down the four *tírthas* to be drunk. See Manu ch. ii., v. 59. Amarakośa ch. ii., sec. vii., v. 51.

[5] Manu ch. ii., v. 60.

[6] That is, the Bráhmaṇa is purified when it reaches the heart; the Vaiśya, when it reaches the throat; and the Śúdra, the palate. Vijñáneśvara says that the uninitiated twice-born are ranked along with women and Súdras See Manu ch. ii., v. 62.

22. Bathing, throwing [purifying] water over the body with *Mantras* addressed to the water-gods, retention of breath, making *Upasthána*[1] to the sun, [and] reciting the *Gáyatrí*, daily.[2]

23. The *Gáyatrí* is to be recited with the head of it, preceded by the *Vyáhṛitis* each to be coupled with the *Praṇava*. Three of these when recited constitute the retention of the breath.

24. Subduing the breath, sprinkling [the body] with waters, [reciting] the three *Mantras* addressed to the water-gods, with the face to the west, he is to recite the *Gáyatrí* till the stars rise.

25. In the same manner, in the morning twilight, he is to stand facing the east till the appearance of the sun. Afterwards fireworship is to be performed for both the twilights [respectively].[3]

26. Then, he is to bow to the elders, saying—'I am so and so'; and composing himself, he is to serve the preceptor in order to learn the *Veda*.

27. Being invited [by the preceptor] he ought even[4] to study; and whatever may be acquired should be bestowed [on him, the preceptor]; and by his mind, speech, and body, he should conduct himself so as to benefit him [the preceptor].

28. The grateful, kind,[5] quick of perception and able to retain, pure, strong in body and mind, one who gives out the good acts, but not the faults of others, well-behaved, devoted [to the preceptor's service], one related, one able to give knowledge or money: such [students] should be taught.

29. The staff, the skin [of the black antelope,] the sacred thread, and the girdle, let him wear; [and] for his living, let him beg of blameless *Bráhmaṇas*.[6]

30. In [obtaining] living by begging, the *Bráhmaṇas*, *Kshatriyas* and *Vaisyas* are respectively to use the word 'thou' in the beginning, in the middle, and at the end.[7]

---

[1] The word means, standing in the presence of, and with hands raised and pressed together, addressing appropriate prayers to the object of worship.

[2] All the five rites of the day are here referred to.

[3] Once after the morning twilight and again after the evening twilight.

[4] *api* is the original word, which, Vijñáneśvara says, is put to include all duties laid down by Gautama.

[5] So rendered by Vijñáneśvara. The original literally means "not hating." See Manu ch. ii., v. 109. Atri.

[6] Manu ch. ii., v. 48.

[7] Thus the Bráhmaṇa is to say '*Bhavati bhikshám dehi*' (thou give alms); the Kshatriya, '*Bhikshám bhavati dehi*' (give thou alms); and the Vaisya '*Bhikshám dehi bhavati*' (alms give thou). In all instances this is addressed to females. See Manu ch. ii., v. 49.

31. Performing the worship of the fire, let him, with the permission of the preceptor, dine silently[1] after making the *Apośana*[2] and honoring the food, not blaming [it].

32. Remaining a *Brahmachárin* when not in distress,[3] let him [the Brahmachárí] not eat food from one man.[4] A *Bráhmaṇa*[5] [Brahmachárí] may dine[6] at a *Śráddha*, without breaking [the rules laid down for his] conduct.

33. Let [him] abstain from honey, flesh, applying black pigment to the eye-lashes;[7] eating the leavings of another man,[8] fermented liquors,[9] woman, destruction of animal-life, looking at the sun [at rising and setting],[10] low speech, and fault-finding.

34. He, who performing the rites (of conception, &c.) gives (*i. e.* teaches) him [the student] the Veda, is *Guru*;[11] he who performing the *Upanayana* [only] gives (*i. e.* teaches) the Veda is described as *Áchárya*.[12]

35. [He who teaches] a portion of the Veda is *Upádhyáya*;[13] he who performs a sacrifice is called *Ritvij*;[14] these are to be honored in their order; greater than all these is the mother.[15]

36. For each Veda, the rules of a Brahmachárí are to be observed twelve years or five (years). Some [authors] say that [they are to be

---

[1] The original strictly means restraining his tongue; but it is rendered as above by Vijñáneśvara.

[2] The act of drinking the water with certain ceremonies at the beginning and the end of meals.

[3] Vijñáneśvara renders *anápàdi* into "disease, &c. not existing."

[4] See Manu ch. ii., v. 188.

[5] This clause is limited to a *Brhámaṇa* Brahmachárin; for the *Kshatriya* and *Vaiśya* Brahmacháríns cannot be so invited. See Manu ch. ii., v 190.

[6] The original is *Kámam aśniyát*. But in commenting on Manu, ch. ii., v. 189, Viśvarúpa says that the rule of his order is kept inviolate, if he partakes of honey or flesh at a *Śráddha*. Sarvajñanáráyaṇa, in commenting on the same, says that although the eating of these things at a *Śráddha* does not destroy the rule of the order, still it *is* objectionable. Therefore if he eats at a *Śraddha*, he ought to perform penance by retaining the breath, &c.

[7] Vij. makes *añjana* mean ointment as well as pigment.

[8] Vij. qualifies it by saying "except those of the preceptor."

[9] Vij. translates *sukta* into "harsh words;" but that signification does not seem to be appropriate.

[10] 'At rising and setting' is added by Vij.

[11] Manu ch. ii., v. 142. [12] Id., ch. ii., v. 140.

[13] Manu ch. ii., v. 141. [14] Id., v. 142. [15] Id., v. 144.

observed) till the study of the Veda is completed.[1] In the sixteenth year the hair is to be shaved.[2]

37. The maximum age for the performance of the *Upanayana* rite for the Bráhmaṇas, Kshatriyas, and Vaiśyas [respectively] is up to the sixteenth, the twenty-second, and the twenty-fourth year.[3]

38. After this, all these [youths of the three classes] fall out-casts from religion, degraded from the *Gáyatrí*, and, if the *Vrátya-stoma* rite be not performed, [they become] *Vrátyas*.[4]

39. The first [birth] of the Bráhmaṇas, Kshatriyas, and Vaiśyas is from the mother; the second is from the tying of the *Munji*: hence they are called *dvijas* (or twice-born).[5]

40. To the twice-born classes, the Veda is the highest road to beatitude [as the expounder] of sacrifices, of austerities, and of good actions.

41. The *dvija* who daily[6] studies the Ṛig [Veda] satisfies the

---

[1] Many other Smṛiti writers prescribe 12 years, or until the attainment of the Veda; but Yáj. alone gives five years as another period, on what authority, does not appear. See Manu ch. iii., v. 1. This would give each Veda, 3 or 6 or 12 years.

[2] The rite is called *Keśánta*, or cutting of the hair. See Manu ch. ii., v. 65. The above *Keśánta* rite according to Yáj. would appear to be only for Bráhmaṇas.

[3] See Manu ch. ii., v. 38. Kullúka holds the period to extend to the end of the 16th year; he also cites *Yama Smṛiti*, a text which prescribes the time to be the beginning of the 16th year; but he holds this last as not a generally binding authority. Nílakaṇṭha cites the same text of *Yama Smṛiti*, and in the Samskára Mayúkha adopts it. Anantadeva in the Samskára Kaustubha concurs (leaf 115, p. 2) in the views of Nílakaṇṭhá.

[4] See Manu ch. ii., v. 39, which is almost identical with the above, except the last clause. Manu in the next verse (40) shows that after a sacrifice they become fit for intercourse, and Yaj. specifies *Vrátyastoma* as that sacrifice. The English version of Manu does not convey a proper notion of the original.

Áśvaláyana describes these *Vrátyas* as being impure, and unfit for *upanayana*, for receiving the Vedas, and for intercourse as to food, worship, &c. But he nowhere expressly provides expiation for them. Various writers, (such as Gágábhaṭṭa in his Játiviveka,) have stated the law applicable to the progeny of the *Vrátyas*, who therefore must have been living as a class at some time in Hindu history. See Yájñavalkya, ch. iii., प्रायश्चित्त for a *Vrátya*. The expiatory ceremonies for *Vrátyas* are laid down by other writers to be *Uddálaka Vrata*, bathing in the *Avabhṛitha* ceremony at a horse sacrifice, and Vrátyastoma.

[5] See Manu ch. ii., v. 169. This verse should have been inserted immediately after v. 10 (see above p. 161).

[6] The original is *anvaham*, which means daily. The word is repeated in each verse from 41 to 45, but this is unusual with Yáj., whose utterances are usually aphoristic, and abhor repetitions. The same remark applies to *tarpayet*, *i. e.* "satisfies," and other equivalent words which are so often repeated.

gods with honey and milk, and the *manes* with honey and clarified butter.[1]

42. He who daily studies the *Yajur-Veda*, as far as he can,[2] satisfies the gods with clarified butter and nectar, and the manes with clarified butter and honey.

43. He who daily studies the *Sámans*, satisfies the gods with the *Soma* juice and clarified butter, and the manes with honey and clarified butter.

44. The *dvija* who daily studies, as far as he can, the *Atharvan* and *Angiras*,[3] satisfies the gods with fat[4] and the manes with honey and clarified butter.

45, 46. The questions and replies in the Vedas,[5] the Puráṇas, the Dharmaśástras [beginning with that of Manu], the *Nárâśansís*,[6] the *Gáthas*,[7] the histories, the science, [like that taught by *Varuṇa's* son]—whoever daily studies these as far as he can, [45]

Satisfies the gods with flesh, boiled rice mixed with milk and honey; and the manes with honey and clarified butter. [46]

---

[1] The Vedic text is "जायमानो वै ब्राह्मणस्त्रिभिर्ऋणवा जायते"&c. and the other Smṛiti writers say that by studying the Vedas the debt due to the Rishis is discharged; but Yáj. makes no mention of them at all. Manu mentions ऋषियज्ञ (see ch. iv., v. 21), and it is made by reading the Veda. [See ch. iii., v. 70 where the same is called ब्रह्मयज्ञ].

[2] "As far as he can" is a qualification applicable to the preceding verse; also Yáj. being a *Yajur-Vedi* Bráhmaṇa glorifies his Veda over the Rigveda, as the mention of nectar in this verse shows. Manu ch. iv., v. 124, shows the relative importance of the Vedas.

[3] The Víramitrodaya describes *Angiras* as that branch of the Atharva Veda which principally treats of incantations.

[4] Vij. makes no mention of this in the Mitákshará. This is an unusual word of rare occurrence, and one which peculiarly called for comment.

[5] Called in the original *Vákovákya*; this is an idiomatic expression of which there are two constituents, *vák*, *i. e.* question, and *vákyam*, *i. e.* sentence or reply. This phrase is applied to those portions of the Vedas which consist of questions and answers. See further on in the 2nd chapter of Yaj., verse 4, where Vij. describes a well versed *Bráhmaṇa*, and amongst his qualifications he puts his acquisition of *vákovákyam* on the authority of the following text: "स एष बहुसुतो भवति लोकवेदविदाङ्गविद्वाकोवाक्येतिहासपुराणकुशल इ०" See the first *A'hnika* or chapter (called the *Paspaśa*) leaf 1, p. 2 of the Mahábháshya of Pataṇjali.—The word वाकोवाक्य in these sentences has been translated by *Kaiyyaṭa* just like Vij. This word does not occur except in the *A'rsha* (or Rishi's) writings.

[6] Vij. says that *Nárásánsis* mean Mantras in honor of the Rudra god. But see Taittiríya Araṇyaka, p. 235, second Prapáṭhaka, ninth Anuváka कल्पान् गाथानाराशंसीः प्रीणाति with the whole of Mádhava's comments thereon.

Víramitrodaya calls certain three *richs* beginning with इदं जना उपस्कृता इ० in the appendix called *khila* to the Rig-veda as Náráśánsíh.

[7] Prose writings in the Vedas addressed as prayers to deities.

47. They being satisfied, satisfy him with all beneficial desired fruits.[1] Whichever *Mantras* he repeats, he derives their [proper] benefits.

48. The *dvija* who daily recites the Veda, enjoys the fruit of giving away three times the whole earth filled with treasures, and of austerities [like the *Chándráyaṇa*].

49. The *Naishṭhika Brahmachárin*[2] is to live near the *Áchárya*: in his absence near his son or his wife, or his fire.

50. In this manner the *Brahmachárin* using his body, and subduing his senses, attains the world of *Brahmá*, and is not born again.

[End of the section relating to the Brahmachárin.]

## SAMÁVARTANAM.

[Return to another order.]

51. Having finished [the study of] the Veda, or the observance of rules [laid down for a Brahmachárin, or having done] both [and] given to the *Guru* what he may wish for,[3] let him bathe with his permission.

## MARRIAGE.

52—53. He who has not lost his *Brahmacharya* (chastity), let him marry a girl of [good] parts, who has not been accepted or enjoyed by another, [who is] attractive in his sight, who is not a *Sapiṇḍa* of him [and is] a junior; [who is] free from irremediable disease

[1] Yáj. generally abbreviates where Manu lengthens; but here it is the reverse; of what Manu has done in one verse (Manu ch. ii., v. 107), Yáj. has taken seven to accomplish. It seems, however, that Yáj. has in this instance followed the Taittiríya Áraṇyaka and not Manu, as may be seen on actual comparison of the texts.

[2] See p. 84 above.

[3] I have translated *Vara* into "what he may wish for." In the Gobhila Smṛiti, or what is called *Karmapradípa*, the word *Vara* is thus defined (vv. 89 and 90):

गौर्विशिष्टतमा विप्रैर्वेदेष्वपि निगद्यते ॥ न ततोन्यद्वरं यस्मात्तस्माद्गौर्वर उच्यते ॥ ८९ ॥
येषां व्रतानामन्तेषु दक्षिणा न विधीयते ॥ वरस्तत्र भवेद्दानमपि वेच्छावशादुरोः ॥ ९० ॥

Translation:—"Even in the Vedas the cow is described by the Bráhmaṇas as the highest [being]; therefore the cow is to be *vara* (high). In the case of those *Vratas* (ceremonies) where no dakshiṇá (present) at the end [to the priest] is prescribed, the *dakshiṇá* (gift) is to be either a *vara* or whatever the *guru* (preceptor) might wish.

*Vara* means four *kárshápaṇas* according to several commentators on the *Kalpa Sútras* and other writers. Vij. has left off this technical meaning, and adopted the common acceptation. The Vír. says that some read *dhana* (wealth) instead of *vara*.

who has brothers; who is descended from one whose *gotra*[1] and *pravara*[2] are different from his; and who is removed five degrees on the mother's and seven on the father's side.

54. [She should be descended] from a high learned family, ten ancestors [viz. five on each side] of which are distinguished; but not from a family tainted with hereditary diseases, even though [she be qualified] as above stated.

55. Endowed with these[3] qualities, of the same class, versed in the Vedas, young, talented, and popular, and whose manhood has been tested, [such should be] the husband.

56. The taking of a *Súdra* wife by the twice-born is [indeed] ordained [by some], [but] it is not agreeable to my views; because from her he is himself born.[4]

57. Three, two, or one [wife] to the Bráhmaṇas, Kshatriyas, and Vaiśyas [is laid down] according to the priority of classes, and respectively [*i. e.* to a Bráhamaṇa, a Bráhmaṇa, Kshatriya and Vaiśya wives and so on]; to the Súdra [is] a wife born in the same class.

58. That is called *Bráhma* marriage [wherein the bridegroom] being invited, [the bride] is given away, bedecked according to the [givers'] means. The [son] born of her purifies twenty-one persons on each side.[5]

59. [Giving away the bride] to the *Ritvija* sitting at a sacrifice [makes] a *daiva* [marriage]; [giving the bride] after taking a cow, and a bullock [makes] an *árṣha* [marriage]; the son born of the first [*i. e.* the *daiva*] marriage purifies fourteen persons, that produced from the second, six.

---

[1] The definition of *gotra* given in the Smṛityartha-sara, and quoted in the Samskára Mayúkha, is :—जमदग्निभरद्वाजविश्वामित्रात्रिगौतमाः। वसिष्ठकश्यपागस्त्या मुनयो गोत्रकारिणः॥ एतेषां यान्यपत्यानि तानि गोत्राणि मन्वते which means "The sages Jamadagni, Bharadvája, Viśvámitra, Atri, Gautama, Vasiśhṭha, Kásyapa, and Agastya are the progenitors of *gotras*. Their progeny is considered a *gotra*." Considering this definition rather vague, Nílakaṇṭha and Anantadeva both say that *gotra* is that progeny of any of the *Saptarshi* (seven sages) and Agastya which is popularly known as *gotra*. The number of *gotras* are thus indefinite, and determined by usage alone (see the Samskára Kaustubha l. 179, p 2).

[2] A *pravara* is explained in the Samskára Kaustubha to be ऋषिसम्बन्धेनाग्नेः प्रार्थनानि on the authority of Baudháyana [see l. 182, p. 2], which means 'the prayers [addressed] to the fire after [the mention of the invoker's] connection with a ऋषि (sage).' Nílakaṇṭha says *gotra* is the offspring of the abovementioned eight sages, and forty-nine of these are termed *pravara*. For their list see the verses from the Smṛitimanjarí cited by Nílakaṇṭha in his Samskára Mayúkha, in regard to the enumeration of *gotra* and *pravara*, as showing the extent of intermarriages permitted.

[3] See verse 54 above.

[4] See Manu ch. iii., vv. 12—19. Manu mentioning a Súdra wife as allowable, himself condemns such a union further on. Vasishṭha speaks of it as being mentioned by one A'chárya, but condemns it distinctly. Yájñavalkya pronouncedly follows them in discarding it altogether.

[5] That is, ten ancestors and ten successors, and himself.

60. Giving the bride after telling the bridegroom 'may she fulfil with you the duties of religion,' makes a *Káya*[1] marriage; the son born of that will purify six and six persons along with himself.[2]

61. The *A'sura* is [that marriage which takes place] on the acceptance of money; the *Gándharva* is that which occurs in consequence of each other's [love][3]; *Rákshasa* [is that where the bride] is taken away in war; [and] *Paiśácha* is that where deceipt is practised on the bride.[4]

62. When [the bride and bridegroom] are of the same class, the hand [of the bride] is to be taken; in the marriage of a Bráhmaṇa, a *Kshatriya* [bride] is to take hold of an arrow;[5] a *Vaiśya* [bride], of a whip, [and a Śúdra one, of the skirts of a garment].[6]

63. The father, father's father, brother, a paternal male relative [*i. e. sapiṇḍas, sagotras*, &c.], [and] the mother [is to be] the giver of the bride, provided [the giver] be of sound mind, the second in the absence of the first, the third in that of the second, &c.

64. [He who being qualified to give] does not give her [in marriage], incurs [the sin of] infant-killing at each menstrual period. If there be no giver, the maiden is herself to select a [suitable] bridegroom.

65. Once is a maiden given; [he who] takes her after giving is liable to be punished like a thief. If a bridegroom better than the previous one comes, even the given [maiden] may be taken away.[7]

66. He who gives away [a maiden] without describing her blemishes is to pay the highest fine[8]; who abandons a blameless one is to be similarly punished; who falsely blames one is to be fined a hundred [*paṇas*].[9]

---

[1] Called also Prájápatya by Vijñaneśvara.

[2] Six after him, and six before him, making with himself thirteen.

[3] One made by each other's consent without the intervention of a third party.

[4] Carrying her away when asleep, or when intoxicated by some drugs administered to her. Unlike Manu and others, Yáj. does not say which forms are allowable for which classes. But Paiśacha is placed last in the list, as being the worst in his view.

[5] See Manu ch. iii., vv. 43, 44.

[6] This clause is added by the commentator; but of this there is not one word in the text; and as Yájñavalkya condemns the union of a *Bráhmaṇa* with a *Śúdra*, it is rather too much for the commentator to make such an addition. Sarvajñanáráyaṇa in his comments on Manu ch. iii., vv. 43 and 44, says the bridegroom is to hold an arrow and a whip, and the Kshatriya and Vaiśya brides are to touch them respectively.

[7] This is before the walking of seven steps according to Vijñáneśvara. It does not appear on what authority this text is based; for Manu has nowhere said this.

[8] *Uttamasáhasa* is the original word which is defined by Yáj. in this very chapter (vide vv. 365, 366). It is 1080 *paṇas*.

[9] *Paṇas* is added by Vijñáneśvara.

67. She who is again married, whether she be uninjured or injured [by connection], is a *Punarbhú*;[1] she who, leaving a husband,[2] lusts after another man of the same class, is a *svairiṇí*.

68. To a sonless [widow] when in season, a younger brother of the husband or a *sapiṇḍa* or a *sagotra*,[3] commanded by the *Guru* (preceptor) and desirous of raising a son should go, after applying clarified butter to his body.

69. He should go until conception takes place; otherwise he will become *patita* (or fallen); the son born in this manner is a *kshetraja*.[4]

70. An adulteress is to be allowed to live, deprived of her authority, dirty, fed with a view to sustain life only, dishonored, sleeping on the ground.[5]

71. The moon gave purity to women, the *Gandharva* [gave them] good speech, the fire [gave] purity throughout; therefore women are all pure.[6]

72. The purification from adultery[7] is at the menstrual period; on [adulterous] conception,[8] on the killing of the fœtus, or of the husband, or [on the commission] of some great sin, [the wife] is to be abandoned.

73. [A wife who is] drunkard, diseased, deceitful, barren, who speaks bitterly, who bears female-children, and who hates her husband, should be superseded.

74. Although superseded, she should be maintained; otherwise great sin will be [caused]. Where the wife and husband agree, there three [virtue, wealth, and pleasure] increase.

---

[1] *Punarbhú* is of two sorts—*kshatá, i. e.* one who has had connection with another man previous to marriage, and *akshatá, i. e.* one who has been once married, and is married a second time.

[2] Vij. says her *Kaumárapati, i. e.* her first husband.

[3] The second in the absence of the first; and so on.

[4] *Kshetra* is the place or soil wherein the seed is sown.

[5] Vij. says that this is to be adopted to produce repentance.

[6] This identical text occurs in Atri Smṛiti where it is the 138th verse; probably Yáj. has borrowed it from Atri. In the 27th chapter of Vasishṭha Smṛiti the like passage runs thus:—

"तासां सोमो ददत् शौचं गन्धर्वः शिक्षितां गिरं"
अग्निश्च सर्वभक्षत्वं तस्मान्निष्कल्मषाः स्त्रियः॥

The last clause of Vasishṭha differs. It says that 'fire gave them the power of eating everything,' which means that fire being one of the three husbands a maiden enjoys before marriage, she may eat any ordinarily forbidden thing before her marriage to her human husband.

[7] This must be mental adultery, see Vij. 1. 9, p. 2. The Vír. adds that this purification applies in the case of a forcible connexion as well.

[8] If impregnated, says Vír., by a man of an inferior order.

75. She who whether her husband be alive or dead, does not approach another, attains to glory here, and rejoices with *Umá*[1] [hereafter].

76. [He who] abandons an obedient, attentive,[2] son-bearing, and sweet-speaking wife, should be compelled [by the king][3] to give her a third of his property.[4] If poor, he should [be ordered to] maintain her.[5]

77. Wives are to act according to the words of their husbands: this is the wives' highest duty. If the [husband] has been guilty of some great sin,[6] his purification should be awaited.[7]

78. Because the attainment of worlds, and of eternal [happiness] and of heaven is through sons, sons' sons, and sons' grandsons [respectively], therefore women should be enjoyed, and should be well taken care of.[8]

79. Sixteen nights is the season of wives, wherein they should be approached on the even nights; the *Parvan*[9] nights, and the first four [nights] should be excepted: thus acting [he is] even a Bráhmacharin.[10]

---

[1] The wife of Śiva.

[2] Vij. explains *dakshám* by *Śighrakáriṇím, i. e.* quick in action; but the above is also one of its meanings, and seems better than the one adopted by Vij.

[3] This is added in the Mitákshara by Vij., who explains maintenance to be food, raiment, &c.

[4] Moveable, immoveable, or both.

[5] Vij. does not say whether all the above qualities must exist in a wife before the king will compel the husband to assign her a third of his property, or at least maintain her; but I think the existence of all is not essential. Any one quality will entitle the wife to relief.

[6] The five great sins are (1) killing a *Bráhmaṇa*, (2) drinking liquor, (3) stealing gold, (4) having connection with the *Guru's* wife, and (5) maintaining intercourse with the above four classes of sinners. See further on Yáj. ch. iii., v. 227.

[7] The wife is independent of the husband in regard to the performance of her necessary religious duties, so long as his great sins remain unatoned; but for other things she would await his purification.

[8] See Manu ch. ix., v. 137 "पुत्रेण लोकाञ् जयति, पौत्रेणानन्त्यमश्नुते । अथ पुत्रस्य पौत्रेण ब्रध्नस्याप्नोति विष्टपम् ॥" Translation:—"[A man] secures the [future] worlds by [means of] a son, enjoys perpetuity by [means of] a grandson, and reaches the heaven of the sun by [means of] a grandson of a son." Vij. translates *lokánantyam* into the continuity of the family; but the meaning is opposed to the above explicit text of Manu and the critical sense of the above passage.

The taking of a wife is for the purpose of begetting good progeny; and to the attainment of this end, wives should be well taken care of.

[9] The 4th and 14th nights of the bright and dark haloes of each lunar month, and the full and new moon days. See Manu ch. iii., vv. 46-48.

[10] For instance when one is invited to a *Śráddha* feast, and has partaken of it, one of the rules he has to observe on that day is the living like a Bráhmacharin, that is having no sexual intercourse with his wife; but if the night be one of the allowed even nights mentioned above, he may have such sexual intercourse without losing his attribute of Brahmachárin on that day.

80. Thus going once to the slender[1] wife, avoiding [the conjunction of the moon with] the Maghá[2] and Múla[3] constellations, [and] when the moon is lucky, he should beget a son endowed with good qualities.

81. Or, remembering the gift made to the women, he should act according to her wish; and he should always be devoted to his wife,[4] because it is said that women should be always protected.[5]

82. By the husband, the brothers, the fathers, kinsmen,[6] the mother-in-law, the father-in-law, the husband's younger brothers, and by *Bandhus*[7] are women to be worshipped with ornaments, raiment, and food.[8]

83. Keeping the household furniture, attentive, cheerful, opposed to expense, devoted to the husband, she is to venerate the feet of her father-in-law and mother-in-law.[9]

84. She whose husband is gone abroad, should leave off playing [with balls, &c.,] adorning the body [with scents, &c.], seeing assemblages of men and festivals, laughter, going to the houses of strangers.

85. The father is to protect the maiden [before her marriage]; the married woman is to be protected by the husband, and in old age [in his absence][10] by sons, or in their absence by kinsmen; because women are never to have independence.[11]

86. She who is bereft of her husband, is not to be without [the protection of] the father, mother, sons, brothers, mother-in-law, father-in-law, mothers' brothers; otherwise she will incur reproach.[12]

87. She who is intent upon what would be pleasing to the husband, whose conduct is praiseworthy, and who has subdued her senses, attains to glory in this world, and the blessed state after death.

---

[1] She should be slender in consequence of confining herself to the proper diet.

[2] Donis Regulas: see Súrya Siddhánta, translated by Bapu Deva Śástrí, Calcutta, 1861, p. 62.

[3] Scorpionis, Antares. Id.

[4] Vij. says the use of the word *eva* (even) shows that he should not go after another's wife. See Manu ch. ix., v. 5.

[5] And this cannot be done unless their desires are satisfied by the husband devoting himself to them, and abstaining from similar intercourse with other women.

Vij. discusses the above, and quotes the texts of the *Mimánsá*, and comes to the conclusion that in season going to the wife is essential. In support of his views he cites the old commentators Bháruchi and Viśvarúpa.

As to the *vara* or gift to women, see the Taittiríya or black Yajurveda, Kánda ii., Adhyáya. v., Anauváka 1, beginning with "ता अब्रुवन्वरं वृणामहै इ०"

[6] *Jñáti* is the original word.

[7] *Bandhu* means the technical Bandhus according to the Víramitrodaya.

[8] See Manu ch. iii., v. 55.

[9] See Manu ch. v., v. 150.

[10] This is added by Vijñáneśvara.

[11] See Manu ch. ix., v. 3.

[12] See Manu ch. ix., v. 2.

88. Should there be wives of different classes, religious duty is not to be performed by one of a different class ; amongst wives of the same class, the eldest is to officiate in religious ceremonies, and no other.[1]

89. The husband having burnt his well-conducted wife with the *Agnihotra*[2] fire, should without delay take another wife, and [kindle] another fire.

[End of the section on 'Marriage.']

## DISQUISITION ABOUT CLASSES, CASTES, &c.

90. Sons continuing the line and begotten after proper marriages by men on women of the same class are *sajáti* (of the same caste).[3]

91. The son begotten by a Bráhmaṇa upón his Kshatriya wife [is] a *Múrdhávasikta,* one upon a *Vaiśya* wife is an *Ambashṭha,* one upon a *Śúdra* is a *Nisháda* or *Páraśava.*[4]

92. The sons borne by Vaiśya and Śudra wives to a Kshatriya are called *Máhishya* and *Ugra* [respectively][5] ; the son born of a Vaiśya by a Śudra wife is a *Karaṇa*[6] : this rule refers to wives regularly married.

93. One begotten on a Bráhmaṇi woman by a Kshatriya [is] a *Súta*[7] ; by a Vaiśya, a *Vaidehaka*[8] ; and by a Śúdra, a *Chándála*[9] outcaste to all religion.

94. A Kshatriya woman with a Vaisya [man] produces a *Mágadha,*[10] and with a Śúdra produces a *Kshattá*[11] ; a Śúdra begets upon a Vaiśya woman an *Áyogava.*[12]

95. A *Máhishya* produces upon a *Karaṇi*[13] [woman], a *Rathakára.* [In short] all *Pratilomaja* (those produced in the inverse order), and all *Anulomaja* (those produced in the direct order), are to be understood as bad and good respectively.

96. The rise in caste [comes], be it understood, by the fifth or seventh birth[14] ; by acts done against rule[15] [he similarly sinks] to an equality [with the caste whose rules he adopts]. [In the mixed classes, the issue begotten by *Bráhmaṇás, &c.*] rise or fall as before.

---

[1] Compare Manu ch. iii., v. 12.

[2] Worship of the three fires named Gárhapatya, Dakshiṇágni and Áhavaníya.

[3] Manu ch. iii., vv. 12, 42, 43. [4] Manu ch. x., vv. 6, 8.

[5] Manu ch. x., vv. 6, 9. [6] Id. ch. x., v. 6. [7] Id. ch. x., v. 11.

[8] Manu ch. x., v. 11 [9] Id. v. 12. [10] Id. v. 11. [11] Id. v. 12. [12] Id.

[13] Amarakośa, ch. ii., sec. x., v. 4

[14] Thus, Vij. says, that a *Bráhmaṇa* begets upon a Śudrá, a *Nishadi* ; she (the *Nishadi*) marrying a Bráhmaṇa produces a girl who again marries a Bráhmaṇa ; in this manner the marriage of the sixth daughter with a Bráhmaṇa produces a Bráhmaṇa (ch. i., l. 15, p. 1). Again a Bráhmaṇa produces upon *Vaiśya,* an *Ambashṭhi* who marrying a Bráhmaṇa bears a daughter, and these connections going on for five generations produce a Bráhmaṇa.

[15] If a Bráhmaṇa or its like a Kshatriya, &c., he sinks after the fifth or seventh generation to the level of the class whose rules he adopts. And so do the other classes (ch. i., l. 15, p. 1.)

## DUTIES OF A HOUSEHOLDER.[1]

97. Let the householder daily perform the *Smárta*[2] ceremonies on the marriage-fire, or the fire taken at the time of taking the heritage; and the *Śrauta*[3] ceremonial on the *Vaitánika*[4] [or the three sacred fires].

98. After finishing the care and attention with respect to the body, a twice-born, making the purificatory rites, should first clean his teeth, and then say the morning-prayer.

99. Having offered sacrifices to the fires, let him, with collected thoughts, repeat prayers sacred to the sun; let him study the meaning of the *Vedás* and of the various *Śástrás*.[5]

100. Let him approach the ruler in order that what he has not may be obtained, and what he has may be preserved; [afterwards] bathing, let him offer libations of water to the gods, the *manes*, and worship the gods.[6]

101. Let him [then] repeat the *Vedas*, the *Atharvan*, the *Puráṇas*, together with the *Itihásas* (histories), according to ability, in order that the rite of uttering prayers may be completed: and let him likewise meditate on the science of self-knowledge.[7]

102. The great sacrifices to the *Bhútas*,[8] the manes, the gods, the *Brahma*[9] and men, are—[1] the *Bali-karma* (making of the *Bali* sacrifice),[10] [2] the *svadhá* offering,[11] [3] the offering of food to fire, [4] the repeating the Vedas, and [5] the honoring of guests.[12]

---

[1] The Víramitrodaya too calls this Section 'domestic duties.'

[2] As directed by the Smṛitis, and laid down in the Gṛihya Sútra of the performer's branch of the Veda: see Manu ch. iii., v. 67.

[3] According to the Śruti or Veda.

[4] Vaitánik means the three sacred fires called A'havaníya, Gárhapatya, and Dakṣhiṇágni: see A'śvaláyana Śrauta Sútra, p. 2.

[5] Vij. adds that the word *cha* indicates that what has been studied, should be revised.

[6] Vij. suggests that the water should be offered by the river side, where the bathing should be performed. The worship, &c. is to be performed according to the *Gṛihya Sútra* of the party. The use of *cha* after the *Pitṛis* (manes) shows that water is to be offered to the sages likewise.

[7] The *Upanishads*. Vij. says that these should be recited entire or in portions.

[8] A class of unseen spirits.

[9] The reading of the Vedas.

[10] See next verse.

[11] Giving of food after uttering the word *svadhá*.

[12] Yáj. has first succinctly described the five daily sacrifices in this verse, and afterwards amplified the same subject in the three following verses. See Manu ch. iii., v. 70.

103. Let him offer the sacrifice to the *Bhútas* from the remains of food after sacrifice has been offered to the gods; let him then place on the ground food for dogs, *Chándálas*, and crows.

104. Food [is] to be daily given to the *manes*, and men, and water also,[1] daily; the *vedas* to be [likewise] daily repeated; food is not to be cooked simply for oneself.

105. Children, the married girls, the old, the pregnant, the distressed, the unmarried girls, the guests and the servants, are to be fed; and the man and his wife are to eat of the remaining food.[2]

106. Let the twice-born diner take food covered and sweet, by means of the *Ápośana*[3] in the beginning as well as in the end.[4]

107. Gift is to be made to men of the [four] classes [coming] as guests according to ability; giving precedence [according to the order of the classes];[5] even in the evening a guest is not to be turned away, and hospitality is to be shown [if there be no food to give, at least][6] with [kind] words, [and giving] room, grass, and water.[7]

108. To the *Sannyásin* and to the *Brahmachárin*, alms are to be given with kind treatment; also, those friends, relatives and brethren who come at [dinner] time, should be fed.[8]

109. Let him give a big ox or a big goat to a Bráhmaṇa knowing the Vedas,[9] and [let him give him] also good reception, delicious food, sweet speech, and precedence in sitting.

110. Let him once a year worship [with a *Madhuparka*],[10] the *snataka*,[11] the *áchárya*,[12] the ruler, the friend, the son-in-law, and again the *ṛitvij* (the officiating priest) [should be worshipped] at each sacrifice [with a *Madhuparka*].

---

[1] Vij. says that water is to be given in the absence of food, roots, &c; but the word is *api*, which cannot directly bear such a construction. Vij. has evidently followed some other Smṛiti here. See Manu ch. iii., vv. 81—93.

[2] See Manu ch. iii., vv. 114—118.

[3] See verse 31 of this chapter, and note at p. 164.

[4] Food is said to be naked in the beginning, and when a *dvija* takes in the water as directed, he spitually covers it, and in the end by another similar sip of the water he gives it the power of nectar.

[5] Vij. interprets *anupúrvaśah* by 'according to the order of classes.'

[6] Vij. adds the words within the brackets.

[7] See Manu ch. iii., vv. 99—112.

[8] Ibid.

[9] See below verse 111.

[10] Whoever is to be honored with a *Madhuparka* is to be seated, to have his feet washed with water, to be asked to take some water by means of the *Áchamana*, and to have honey mixed with curds given to him to eat. This is called a *Madhuparka*. See Manu ch. iii., vv. 119, 120.

[11] See above verse 51: he who bathes as therein stated is a *Snátaka*.

[12] See above verse 34.

111. He who is a traveller is to be understood to be an *Atithi* (guest); the *śrotriya*[1] and one versed in one of the Vedas [who come as guests] are to be honored by the householder who wishes [to attain] the world of Brahmá.

112. Without unexceptionable invitation, let there not be [a desire to] taste another's food; let him avoid [abuse][2] of speech, hands, feet, &c. and too much food-taking.

113. The satisfied Śrotriya guest is to be escorted to the boundary; the rest of the day, let him remain [or spend] with superior men,[3] the friends,[4] and brethren.[5]

114. Having made [*i. e.* said] the evening *Sandhyá* (prayers), and having sacrificed to and prayed to the [three] fires; and having dined so as not to produce too much satisfaction surrounded by servants, let him go to sleep.

115. Getting up at the *Bráhma*[6] hour, the benefit of one's own sou should be studied; duty, wealth, and pleasure, according to ability, at the proper times should not be abandoned.

116. Knowledge, acts,[7] age,[8] brothers,[9] wealth,—for these in their order[10] men are to be respected. Even a Śúdra endowed with these deserves respect in old age.[11]

---

[1] *Śrotriya* is one who knows the Vedas; he who knows one branch of a Veda is a *vedapáraga* according to Vijñaneśvara.

Pánini, Adhyáya v., ii., 84 : "श्रोत्रियंश्छन्दोधीते" *i. e.* "He who studies the Vedas is a Śrotriya."

भट्टतारानाथतर्कवाचस्पतिकृतशब्दस्तोममहानिधि p.453 : एकां शाखां सकल्पां वा षड्भिरङ्गैरधीत्य-च । षट्कर्मनिरतो विप्रः श्रोत्रियोनाम धर्मवित् ॥ which means "that Bráhmana who studies one recension [of his Veda] with its *kalpa*, and the six *Angas* (subordinate parts), is devoted [to the performance of] the six duties, and knows the *dharma* (law) is a *Śrotriya*."

[2] The original word is *chápalyam* or activity; Vij. makes it the mischievous use or abuse of the senses specified, of which he gives examples.

[3] *Śishṭa* or superior men; Vij. translates it into men versed in histories, *Puránas*, &c.

[4] *Ishta* is the original word which Vij. translates into men versed in poetry, stories, &c.

[5] *Bandhu* is the word in the text. Vij. makes it skilled in good acceptable conversation. See Báṇabhaṭṭa's Harshacharitra as to this and notes 3 and 4.

[6] The last four *ghatikás* of the night: a *ghatiká* being equal to 24 minutes.

[7] Vij. describes these as *Śrauta* and *Smárta* acts.

[8] That is, says Vij., either senior in years to ourselves, or is more than seventy years old.

[9] Vij. says extensive connection with relatives.

[10] That is, a man with knowledge takes the precedence of one only more aged, and so on.

[11] Vij. says according to a text of Gautama that this is so after he has passed his eightieth year, whether he is possessed of all the above attributes, or some of them.

117. To the old, the loaded, the king, the student who has bathed after just finishing his studentship, the diseased, the bridegroom, the driver of a carriage,[1] way should be given; the king is to be preferred; and the student who has just finished his Vedic studies and bathed is to be respected by the king.[2]

118. Sacrificing, studying and giving alms are [appointed] for the Vaiśyas[3] and Kshatriyas; and to the Bráhmaṇas, there are, in addition, receiving gifts, assisting others to sacrifice and teaching [the Vedas].

119. To the Kshatriyas is ordained the protection of [their] subjects as the chief duty; for the Vaiśya lending at interest, agriculture, trade, and tending cattle are laid down.[4]

120. For the Śúdras is [laid] down the service of the twice-born [as the chief duty], or if he cannot thereby earn his livelihood he may become a trader; or studying the benefit of the twice-born, he may subsist by various mechanical arts.[5]

121. He should be attached to his wife, should be pure [internally and externally], maintain those who depend on him for support, and perform the *Śráddha* ceremonies. He should not neglect [the performance of] the five sacrifices, making use of the *Mantra 'Namah.'*[6]

122. Non-killing, truth, non-stealing, purity, restraint of the senses, giving [alms], restraining the [passions or the] mind, mercy, foregiveness of injuries,—these are the means of attaining virtue.[7]

123. Let him practise real and not assumed behaviour, worthy of his age, intellect, wealth, speech, acquaintance with the science [of acquiring the chief ends of humanity],[8] and his profession or calling.

124. The twice-born who has got food sufficient to last for more than three years may drink the *Soma* juice.[9] He who has a year's food in store, let him perform the ceremonies antecedent to a *Soma* sacrifice.

125. The *Soma* sacrifice is to be performed once a year, the *paśu* (goat) sacrifice is to be made half-yearly at each equinox; the *Agráyaṇa* sacrifice [at the harvest-time], and the *Cháturmásyas* also.

---

[1] Literally, holder of the disk. [2] Manu ch. iv., vv. 138, 139.

[3] Vij. says that for the *Anulóma* classes, also these rites are ordained. Manu ch. x., vv. 75, 83.

[4] See note to v. 118. [5] See note to v. 118.

[6] Vij. says that some say that the verse "देवताभ्यः पितृभ्यश्च महायोगिभ्य एवच॥ नमःस्वाहायै स्वधायै नित्यमेव नमोनमः" should be repeated; others that simply नमः should be said.

[7] These are duties common to all men. Manu ch. vi., v. 92. [8] Added by Vij.

[9] Vij. says for three years, or for upwards of three years. Drinking Soma juice means performing the *Soma* sacrifice. He who has not sufficient means should not incur sin by "drinking the Soma."

126. When these sacrifices are not probable, the twice-born should perform the *Vaisvánarí* sacrifice. A sacrifice which is to be performed for the attainment of a certain object, should not be performed with insufficient means.

127. He who performs a sacrifice by begging money of a Śúdra becomes a *Chándála*[1]; he who does not give away all that has been obtained for sacrifices, becomes a vulture or a crow.[2]

128. Let the *kusúla-dhánya*, the *kumbhí-dhanya*, the *tryáhika* and the *asvastana*[3] householder[4] subsist by gleaning grains or ears of corn: they are to be preferred in their inverted order.

## DUTIES OF A STUDENT.

129. Let him not wish for wealth which will prevent his Vedic study; nor from here and there[5]; nor from reprehensible occupations. Let him be also cheerful.

130. If he is afflicted by hunger, let him seek money from a king, a disciple, or from a person for whom he is sacrificing. Let him avoid hypocrites, doubters, heretics, and cheats.[6]

131. He should wear white garments, should clip the hair on the head and face, and the nails, he should be clean, should not eat in the presence of his wife[7]; nor should he eat with a single cloth on, nor eat standing.[8]

132. He should run no risk,[9] should not without a cause speak bitterly, or what is injurious, or untrue.[10] He should not steal, nor live by forbidden interest.[11]

---

[1] Vij. says 'in a future life.'

[2] Vij. says for a hundred years.

[3] He who lives by keeping food-store for 12 days, or 6 days, or 3 days, or a day [is termed *kusúla-dhánya, kumbhí-dhánya, tryáhika,* and *aśvastana* respectively.

[4] Vij. divides householders into two classes:—(1) *Śálina, i. e.* one who lives in a house, and lives unlike the four classes mentioned in this verse, and (2) *yáyávara, i. e.* those who subsist by gleaning.

[5] That is from anybody who may wish to give. Vij. says "from persons whose character is not known." It clearly appears that a gift is not to be accepted until the character of the giver is known.

[6] Vij. explains heretics as those who reject the ways accepted by the learned and the aged.

For the meaning of a *Bakavṛitti* (cheating like a crane) see Manu ch iv., v. 196.

Compare further Manu ch. iv., v. 192.

[7] The reason assigned by Vij. is that her presence while eating would make their progeny weak.

[8] See Manu ch. iv., vv. 35, 43.

[9] Vij.: "acts involving risk to life."

[10] Manu ch. iv., v. 138.

[11] Vij. defines *várddhushi* as "one living by lending at forbidden interest."

133. He should wear gold,[1] and the sacred thread, carry a stick and a water-pot[2]; [and] should move round the god, the earth, the cow, the Bráhmaṇa and trees.[3]

134. He should not commit nuisance in a river, shade, a road, cattle shed, water, and ashes; nor facing fire, the sun, the cow, the moon, [at the time of] the twilight, water, a woman, or the twice-born.[4]

135. He should not look at the sun, a naked woman, or a woman who has just given up sexual intercourse; nor at urine or ordure; nor should he look at the *Rahu*[5] and stars[6] when unclean.

136. In the rainfall uttering the whole *Mantra* [commencing with] *Ayam me Vajrah* (this is my sword), he should not go [about] unclothed, nor should he [unclothed] sleep with the head towards the west.[7]

137. He should not throw into water [or fire], spittle, blood, ordure, urine, and semen. He should not heat his feet over the fire, nor should he leap over fire.[8]

138. He should not drink water by the hollow of his hand, nor should he awaken a person sleeping. He should not play with the dice or by unrighteous acts[9]; nor should he sleep with a dead body.

139. He should avoid a prohibited act, the smoke from a [burning] corpse, and crossing a river [by swimming]. He should not sit on hair, ashes, husk, charcoal, and a potsherd.[10]

140. He should not report a drinking cow,[11] nor should he in any place enter by an improper entrance. He should not receive [anything] from an avaricious king transgressing the scriptures.[12]

141. As regards receiving [a gift] from a butcher, an oilman, a vintner, a prostitute, and a king, each of these is ten times more wicked than the one preceding.[13]

---

[1] Manu ch. iv., v. 36: the gold would appear to be ornaments of the ears as stated in the Víramitrodaya: and such is the current usage.

[2] Manu ch. iv., v. 36.

[3] 'This should be when passing by those objects,' so says the Vír. See Manu ch. iv., v. 139.

[4] Compare Manu ch. iv., vv. 56 and 52.

[5] Compare Manu ch. iv., vv. 37, 77, and 142.

[6] This refers to the eclipses, see the translation of Súryasiddhánta and Śiromaṇi Goladhyáya by Bapu Deva Śástri and L. Wilkinson, Calcutta, 1861, pp. 13, 178.

[7] Compare Manu ch. iv., v. 75. [8] Compare Manu ch. iv., vv. 45, 48, 53, 54, 56.

[9] Vij. renders धर्मैः by forbidden acts such as leaping over a cow. But the Vír. makes it to mean irreligious persons, and Manu supports him (see ch. iv., v. 79.) Compare further Manu ch. iv., vv. 57, 63, 74.

[10] Compare Manu ch. iv., vv. 77, 69.

[11] The Vír. makes धयन्तीं to mean 'suckling its calf.'

[12] Compare Manu ch. iv., vv. 59, 84. [13] Compare Manu vv. 85, 91.

142. When herbs have grown, the commencement of the studies of Vedas [should take place] on the 15th day of *Śravaṇa* or [a day with] the lunar asterism of *Śravaṇa*, or on the fifth day of *Śravaṇa* with the lunar asterism of *Hasta*.[1]

143. Outside [the village] he should at a watery place relinquish the study of the Vedas according to ceremonies on the 8th day of [the dark fortnight of] *Pausha*,[2] or [another day of that month with] the lunar asterism of *Rohiṇi*.[3]

144. In the case of the death of a pupil, a sacrificer, a preceptor and a *Bandhu*, the [annual] beginning and relinquishing the studies of the Vedas, and in case of the death of a *Śrotriya* of one's own *Sakhá* (redaction,) he should observe three holidays [each time].[4]

145. He should observe a holiday [day and night] when there is thunder at twilight, when there is an atmospheric disturbance or an earthquake, when there is a fall of meteors, when he has finished the Vedas [*mantra* or *Brámhaṇa*], or when he has studied the *Áraṇyaka*.

146. [He should observe a holiday] on the fifteenth, fourteenth, and eighth [days of a fortnight], on the day of an eclipse of the sun or moon, at the junction of two seasons, or after having dined at or accepted [a gift at] a *Śráddha*.

147. [He should not study] a whole day and night when a beast, a frog, a *mungoose*, a dog, a serpent, a cat, or a mouse passes [between him and his preceptors,] or when Indra's standard is raised or taken down.

148. [He should not study] when the voice or sound of a dog, a jackal, an ass, an owl, the [chanting of the] Sáma [Veda], the sound of a bamboo[5] are being heard, or in the vicinity of ordure, a corpse, a Śúdra, an *Antya*, a burning ground, or an apostate.

149. [He should not study] in an impure country, when he himself is impure, during thunder and the flashes of lightning, when his hands are wet, when he is in water, at midnight after dinner [and] when high wind is blowing.

150. [He should not study] during the fall of dust, oppressive heat in all directions, twilight, the mist, the time of danger,[6] whilst running, whilst nasty smell is issuing, and when a respectable man has come to his house.

---

[1] Vij and the Vír. say that when owing to drought or otherwise herbs have not grown, the commencement of the studies is to be made on that day in the month of *Bhádrapada*, when the moon is with the asterism *Śravaṇa* (Aquilæ) or on the full moonday of *Bhádrapada*. Compare Manu ch. iv., v. 95.

[2] Generally corresponds to December and January.

[3] Tauri, Aldeharan. Compare Manu ch. iv., v. 96.

[4] For the several holidays in the study of the Vedas see Manu ch. iv., vv. 97—127.

[5] Vír. applies this to the Vina, a guitar with 7 strings.

[6] Vij. says the danger here meant is that arising from the king or robbers.

151. [He should not study] while riding an ass, a camel, an elephant, a carriage, while embarked on a boat, while on a tree, or waste ground, or a desert. These thirty-seven occasions [the wise] understand to be respites from study for the time [while those things are happening].

152. He should not cross the shadow of a god, a *Ritvij* (sacrificer), a *Snátaka*, (he who has finished his study of the Vedas), the preceptor, the king, and a woman other than his wife; nor [should he cross] blood, ordure, urine, spittle, unguents, &c.[1]

153. He should never show disrespect to the Bráhmaṇa, the cobra, the king, and to himself; he should seek wealth until death[2]; he should not touch any one to the quick.[3]

154. He should throw the remnant of the eaten food, ordure, urine, and water of the feet far away [from his house]. He should practise ordinances prescribed by the Vedas and Smritis.[4]

155. He should not touch, while impure[5] or with his feet, the cow, the Bráhmaṇa, fire, and food; nor should he revile or strike them. He may chastise his son and pupil.[6]

156. He should strenuously practise ordinances in deed, mind, and word; but he should not practise that which though ordained is rejected by the people, and can therefore not lead to [the acquisition of] heaven.

157—158. With the mother, father, guests, brothers [including the non-uterine], women with their husbands living,[7] persons connected by marriage, maternal uncles, the old,[8] the young, the sick, the preceptor, physicians, the dependents, and relations [maternal and paternal] [157],

[With] the sacrificer, the family priest, one's child, wife, slaves, and the uterine[9] brothers, the householder should avoid discussion; [for thereby] he will win the [future] worlds. [158].[10]

---

[1] Compare Manu ch. iv., vv. 130, 132.

[2] The Vír. says this desire for prosperity should cease with the end of the second order.

[3] Compare Manu ch. iv., vv. 135, 137.

[4] Compare Manu ch. iv., vv. 151, 155.

[5] The word is उच्छिष्ट which literally means unwashed after meals, but the Mit. and the Vír. both take it in an extended sense here.

[6] Compare Manu ch. iv., v. 164.

[7] Víj. has explained the word जामि as has been rendered above. The Vír. explains it to mean a sister or the like.

[8] The Vír. says a बाल is a boy under sixteen years of age, and a वृद्ध is one over seventy years.

[9] सनाभय: is explained by Víj. as uterine brothers, and by the Vír. as *Sapiṇḍas*.

[10] Compare Manu ch. iv., vv. 169—174.

159. He should not bathe in another's water without having removed [from its bottom] five lumps of clay. He should bathe in a river,[1] a natural pool, a lake,[2] or a mountain-spring.[3]

160. He should avoid another's bed, seat, garden or house without permission. He should not, except in distress, eat the food of one who is without the [domestic] fire.[4]

161—165. Of a miser,[5] a person under restraint, a thief, an impotent person, a person appearing on the stage, a bamboo-cutter, a person practising base acts, a person living upon usury, a prostitute, and a sacrificer for various persons[6] [161],

Of a physician, a person diseased, a person enraged, an unchaste woman, an intoxicated person, an enemy, a bloody person, a person of a savage disposition, an outcast, an apostate,[7] an impostor, and one eating the remains of eaten food [162],

Of a wayward[8] woman, a goldsmith, an effeminate person, a village sacrificer, a seller of arms, a blacksmith, a tailor, and a keeper of dogs[9] [163],

Of a wicked person, a king, a dyer, an ungrateful person, a butcher, a washerman, a vintner, and a person living in his house with the paramour of his wife [164],

Of a backbiter, a mendacious person, an oilman,[10] a bard, and a seller of the Soma-juice,—he should not receive food.[11] [165.]

166. Among the Śudras, the slave, the cow-keeper, the ancestral friend, the co-cultivator, the barber, are persons of whom he may eat food; [so may food be taken from] one who has surrendered himself [in body, mind and soul].

(Here ends the *Snataka* chapter.)

---

[1] The Vír. defines a नदी as a body of water that flows for 8,000 *dhanush* (a measure equal to four cubits).

[2] The same authority notices a reading of गर्त instead, which he defines to be a body of standing water over 1,000 *dhanush*.

[3] Compare Manu ch. iv., vv. 201, 203.

[4] Compare Manu ch. iv., v. 202.

[5] कदर्य is thus defined by Devala:—आत्मानं धर्मकृत्यं च पुत्रदारांश्च पीडयेत्। लोभाद्यः पितरौ भृत्यान्स कदर्य इति स्मृतः॥ "He is declared to be a *kadarya* (miser) who out of covetousness pinches himself, his religious performances, son, wife, parents, and servants."

[6] The Vír. unlike Vij. and Śulapáni considers गणदीक्षिणाम् to be a copulative compound, गण meaning the joint feast by several and दीक्षिन् sacrificer. Víj. says the compound means a sacrificer for many.

[7] See supra p. 165, v. 38.

[8] The Vír. adopts the alternative interpretation of this word suggested by Víj., viz., a woman without a husband or issue.

[9] The Vír. applies this word to a hunter who like a dog lives by hunting.

[10] Vír. says it means a cartman.

[11] With the above five verses compare Manu ch. iv., vv. 205—223.

## THINGS FIT AND UNFIT TO BE EATEN.

167—168. Food not given with due respect, improper flesh,[1] food filled with hair and worms, sour food, stale food, offals, food touched by a dog, food on which the sight of an outcast is cast [167],

Food touched by a woman in her monthly course,[2] food publicly offered,[3] food given by one not an owner,[4] food smelt by a cow, food eaten by a bird, and food voluntarily touched by the foot, he should not accept.[5] [168.]

169. Unctuous food, though stale and kept long, is fit for use; so also is unoily food made of wheat, barley and the transformations of the cow's milk.

170—175. He should abstain from the milk of a cow which is in season,[6] which is within ten days from its delivery, or which is without its calf; from the milk of a camel or animal with uncloven hoofs, of a woman, of a wild animal, and of a sheep [170],

From offerings prepared for deities and sacrifices, the *śigru* pod, red gums exuding from trees, gums issuing from incisions in trees, unhallowed flesh, herbs growing on filth and mushrooms [171],

From [the flesh of] carnivorous birds, the *Chátaka*, the parrot, the pecking birds, the *Tittibha* [bird], the Indian crane, animals with uncloven hoofs, the swan, and all the domestic fowls [172],

From [the flesh of] the heron, the water fowl, the *Chakravâka* bird, the *Balâka* (a species of the crane), the *Baka* (another species of the crane), the tearing birds[7]; [from the following kinds of dishes, viz.:] the *Kṛisara*, *samyáva*, *páyasa*, *apúpa*, and *śashkuli* without first presenting them to the gods [173],

From [the flesh of] the sparrow, the jackdaw, the osprey, the wild cock, the web-footed birds, the wag-tail, and unknown birds and quadrupeds [174],

---

[1] वृथामांस is explained by Vij and the Vír. to be flesh, no portion of which has been dedicated to God or to the manes.

[2] Víj. says a woman in her monthly course is here used as illustrative of a *Chándála* and the like.

[3] That food which a crier takes with him about the town, and invites mendicants to partake of.

[4] Vij. and the Vír. notice two readings here पर्याचान्तं and पार्श्वाचान्तं which mean,—'Food eaten after the last *áchamana* at the end of meals,' and 'food taken after the neighbour at meals has risen' respectively.

[5] Compare Manu ch. iv., vv. 207—209, 211—213.

[6] Vij. adds a सन्धिनी may also mean a cow that has ceased to give milk regularly, or one that suckles another calf.

[7] Such as *chakora*.

From [the flesh of] the blue jays, the red-footed birds, flesh from a butcher, dry flesh, and fish. Having voluntarily eaten these, he should fast three days and nights.[1] [175]

176. Having eaten an onion, the domestic boar, a mushroom, the domestic cock, garlic, and turnip (or red garlic), he should observe the *Chándráyaṇa* [penance].[2]

177—178. Of the five clawed animals, the porcupine, the lizard, the tortoise, the *Śallaka* (a species of the porcupine), and the hare, and of the fish, the *Simhatuṇḍaka* and the *rohita*,[3] [177]

So also the *Páṭhína*, the *Rájiva*, and the *Sashalka*,[4] are fit for use by the twice-born. Hear now about the injunction as to the eating and abstaining from flesh. [178.]

179. He who eats flesh for saving life, or at the performance of a *Śraddha*, he who eats sacrificial flesh, or flesh for gratifying a Bráhmaṇa after having worshipped the gods and the manes with it, incurs no sin.[5]

180. That evil doer who kills a beast unconformably to the prescribed mode shall dwell in awful hell as many days as there may be hair [on the body] of that beast.[6]

181. By abstinence from flesh a Bráhmaṇa accomplishes all his desires, and obtains the fruit of a horse-sacrifice. Even living in the house he becomes a *muni* (a sage).

---

## PURIFICATION OF THINGS.

182—183. Of a golden or silver vessel, of a shell, of a sacrificial vessel, of a ladle, of a stone, of vegetable, cords, root, fruit, cloth, bamboo-work, hide [182],

Of sacrificial vessels like *chamasa*, the purification is effected by water. Of a *charu* (a vessel in which rice is cooked), of a *sruch* (a sacrificial vessel), of *sruva* (a *Soma*-ladle), of oil-vessels, [the purification is effected] by warm water.[7] [183.]

184. [So also] of a *sphya* (a sacrificial implement), a winnowing basket, a deer's skin, corn, a wooden pestle, a wooden mortar, a cart. Of collected corn and cloth in large quantity, sprinkling of water [is the purification].

185. Wood, horns and bones [are purified] by paring off [their surface]; so are vessels made of fruit-shells by brushing with cows' hair, and sacrificial vessels in a sacrifice by the sprinkling of water by the hand.

---

[1] For the prohibited kinds of flesh, see Manu ch. v., vv. 8-16.
[2] Compare Manu ch. v., vv. 19, 20.
[3] Compare Manu ch. v., vv. 17, 18.
[4] These are three varieties of fish.
[5] Compare Manu ch. v., vv. 26, 27.
[6] Compare Manu ch. v., vv. 53—56.
[7] Compare Manu ch. v., vv. 112, 116, 117.

186. A camlet or a silken cloth is purified by salt-earth, water and cow-urine; sackcloth by the *Bilva* fruit [with water and cow-urine]; and a shawl by soap-berries [with water and cow-urine].

187. So is a *kshauma* (linen cloth) by white mustard seeds [with water and cow-urine]; an earthen vessel by being baked again. The hand of an artisan is pure; so is an article of sale, alms, and the mouth of a female.

188. The purification of the ground takes place by cleansing, by burning, by the lapse of time, by the walking of the cow, by the sprinkling of water, by digging and by smearing. The house is purified by cleansing and smearing.[1]

189. Food being smelt by a cow or sullied by hair, flies or worms, water, ashes, or earth should be thrown on it for its purification.

190. The purification of lead, tin, and copper is by salt, tamarind, and water; that of bell-metal and iron by ashes and water, and that of a fluid by pouring[2] [it into a pot to overflowing].

191. Of that which is besmeared with an unclean thing, the purification is by earth and water, because they remove the smell; what is declared to be pure by the speech [of a Bráhmaṇa], what is cleansed by water, and what is not known [to be impure] is always pure.

192. Water which is as much as is sufficient to quench the thirst of a cow, which is in its natural state, and which is on the ground is pure; so is flesh dropped by a dog, a *Cháṇḍála*, and carnivorous [birds], &c.

193. A ray of light, fire, dust, shade, a cow, a horse, the earth, wind, drops of water, a fly touching, and the calf of a cow when sucking are pure.

194. The goat and the horse are pure at the mouth; the cow is not pure at the mouth; the filthy matters issuing from the body of man are not [pure]. The roads become pure by the rays of the sun and moon, and by the wind.

195. Drops or particles issuing from the mouth are pure; so are drops of sipped water. The hairs on the face entering the mouth are pure. So also does a person become pure by throwing out what is clung to his teeth.

196. Having bathed, drunk, sneezed, coughed, slept, eaten, ridden in a carriage, or put on clothes, a man should rinse the mouth again though he had rinsed it before.

197. The filth and water on the road touched by a *Cháṇḍála*, a horse, or a crow, and houses built of burnt bricks become pure by the wind only.[3]

[1] This is generally done with cowdung.

[2] Vij. says that fluids below a *prastha* (a certain measure) cannot be purified, and must be thrown away.

[3] For the above verses on purification of things, see Manu ch. v., vv. 111—146.

## GIFTS.

198. Brahmá having practised austerities created the Bráhmaṇas for the preservation of the Vedas, for the satisfaction of the gods and manes, and for the protection of righteousness.

199. The Bráhmaṇas are the heads of all [the three last classes]. Of them, those that are versed in the study of the Vedas [are superior]. Among them those who practise observances are superior, and among the latter those who have the knowledge of the soul are excellent.

200. Fitness [to receive in charity] does not arise by mere learning or austerities. Where observance and these two dwell, that is declared to be the fit recipient [of charity].

201. A cow, land, sesamum, gold, &c. should be given with due celebration to a deserving [Bráhmaṇa]. A learned man desiring his welfare, should give nothing to one who is undeserving.

202. A gift should not be accepted by one who is destitute of learning and austerities. If he accepts it, he leads the giver and himself to hell.

203. Every day something should be given to a deserving person; more so on special occasions.[1] A person begged of should also give with due faith according to his means.

204. A good milch cow, whose horns are covered with gold and hoofs with silver, which is covered with cloth and a vessel of bell-metal,[2] should be given with *dakshiṇá* (a money present).

205. The giver of her attains heaven for as many years as there are hairs [on her body]. If the cow be a *kapilá*, he saves himself and six ancestors of his.

206. If she be two-faced,[3] the giver of her, giving according to the aforementioned method, attains heaven for as many years as there are hairs on her body and on her calf.

207. While the two legs and the face of her young one appear from within her womb,[4] and while she is not delivered of the fœtus, a cow is to be considered as the earth.[5]

208. Having somehow given a cow, whether giving milk or not, which is free from disease, and is not emaciated, the giver is honoured in heaven.

209. The affording relief to a fatigued [guest], the service of a sick man, the honouring of the gods, the washing the feet,[6] and sweeping the remains of food eaten by a twice-born, are each like the giving of a cow.

---

[1] Such as those of an eclipse and the like.

[2] The Vír. says this vessel is the milking pot.

[3] For the meaning of this, see the following verse.

[4] The first part of this verse explains what is meant by a double-faced cow.

[5] Meaning that the gift of a cow in such a state produces the merit of a gift of the earth.

[6] Víj. adds 'of a twice-born who is either of an equal or superior rank.'

210. Having given land, lamps, food, cloth, water, sesamum, clarified butter, an asylum to travellers, something to help one in marriage [such as a girl or the like], gold, or a strong bull, he is honoured in heaven.

211. Having given a house, corn, protection, shoes, an umbrella, a garland, an ointment, a conveyance, a tree, a desired thing, or a bed, he shall become extremely happy.

212. The knowledge of *Brahman* is full of all virtue, for it is superior to the gifts [of things]. He who imparts it, enjoys the heaven of the Brahmá without [the fear of] a fall.

213. He who being able to accept, does not accept a gift, attains the several worlds which the charitably disposed [attain by their gifts].

214. The *kuśa* grass, vegetable, milk, fish, perfumes, a flower, curds, land, flesh, a bed, a seat, fried barley, and water should not be rejected [when offered].

215. These are fit to be accepted even of an evil-doer, except a prostitute, an impotent person, an outcast, and an enemy, if offered without solicitation.

216. For honouring the gods and guests, for the living of his preceptor, his dependents [such as the wife and children], and others, and for his own maintenance, he should accept [a gift] from any one.[1]

End of the chapter on 'Gifts.'

---

## OBLATIONS TO THE MANES.

217—218. The new moon's day, the eighth day after full moon,[2] addition [to the family by birth], the second fortnight of the month, the two solstitial days, [the days when] dainties [enjoined for a *śráddha* ceremony] and a worthy Bráhman [are got], the equinoxes [217],

A *vyatipáta*, the *gajachchháyá*,[3] the eclipse of the sun and moon, and whenever the *Śráddha*-performer chooses;—these are the times prescribed for the performance of a *Śráddha*.[4] [218.]

---

[1] With the above verses on Gift, compare Manu ch. iv., vv. 227—248.

[2] Aśvaláyana mentions four *Ashṭamís* (eight lunar days) in the year as called *Ashṭakás*, viz., the eight lunar days of the dark fortnight in the seasons of *Hemanta* and *Śiśira*, or the months of *Márgśirsha*, *Pausha*, *Mágha*, and *Phálguna*.

[3] These are particular conjunctions of time.

[4] The word *Śráddha* literally means that food which is offered out of faith. Compare Manu vv. 122, 123.

219—221. Young men who have studied all the Vedas, a young *Śrotriya*, a youth knowing the *Brahman*, a young person knowing the meaning of the Vedas, a young person acquainted with the *Jyeshṭha Sáma* (a particular portion of the Sáma Veda), *Trimadhu* (three *richs* from the Rigveda), or *Trisuparṇa* (particular *Richs* that occur in the Yajurveda Áraṇyaka),[1] [219]

A sister's son, a sacrificer, a son-in-law, he for whom one performs a sacrifice, the father-in-law, a mother's brother, a *Triṇáchiketa*,[2] a daughter's son, a pupil, a relation, a kinsman,[3] [220]

Persons devoted to observance, persons devoted to austerities, those who worship five fires, a *Brahmachárin* (one of the first order), persons devoted to their father and mother,—these are Bráhmaṇas fit for [invitation to] a *Śráddha*.[4] [221.]

222—224. A diseased Bráhmaṇa, a Bráhmaṇa with a deficient or superfluous limb, a Bráhmaṇa with one eye,[5] a *Paunarbhava* (one born of a twice-married woman), an *Avakírṇa* (one who has violated his celibacy), a *Kuṇḍa* (a son born of adultery during the lifetime of the father), and a *Golaka*, (a son of a widow unmarried), one with contracted nails, one with black teeth, [222]

A teacher for fees,[6] an impotent person, the defiler of a damsel, a person of bad repute, the betrayer of a friend, a backbiter, the seller of the *soma*, and a *parivindaka* (one married before his elder brother) [223],

The forsaker of his father, mother, or preceptor,[7] one eating of a *Kuṇḍa*,[8] one born of an apostate, the husband of a twice-married woman, a thief, and a non-observer of the precepts of the *Śástras* are disqualified [for the *Śráddha*]. [224.][9]

---

[1] Vij. says these are the best Bráhmaṇas for a *Śráddha*.

[2] The reciter of *triṇáchiketa*, which is that portion of the Taittiríya Bráhmaṇa which consists of three Anuvakas, and contains the story of Náchiketa.

[3] The Bráhmaṇas mentioned in this verse are middling for a *Śráddha*.

[4] These are inferior Bráhmaṇas for a *Śráddha*. Compare Manu ch. iii., vv. 128—137, 143, 147, 148, 183—186.

[5] Illustrative of persons totally blind, deaf, bald, &c. according to Vij.

The following is the translation of a verse found here in some MSS. :—

'One entirely naked, one very hungry, one having white leprosy, one with a diseased productive organ, one afflicted with a disease, one with an evil tongue, one tending [cows, &c]. and [a subordinate royal] servant, and those who subsist by trading and weapons.'

[6] Vij. here includes the pupil too who studies by paying regular fees to the teacher.

[7] Vij. includes the forsaker of a wife here.

[8] So says Víj.; the Vír. suggests another interpretation on the authority of a text of Devala, which says that the eater of food measuring a *kuṇḍa* (equal to four *prastha* or seers) is called a *kuṇḍáśi*.

[9] Compare Manu ch. iii., vv. 149—181.

225. Well composed and pure, he should invite Bráhmaṇas on the previous day, who should be under restraint as regards the action of the mind, the speech, and the body.

226. In the afternoon,[1] having honoured them after their arrival with hospitable words, with his hands pure he should seat them on seats after they have sipped water.

227. [The Bráhmaṇas to be invited should be of] an even number, according to [the performer's] means, at a *Daiva Śráddha* (an offering to God), and an uneven number at a *Pitrya Śráddha* (an offering to the manes), in a covered and pure place inclining towards the south.[2]

228. At a *Daiva Śráddha*, two Bráhmaṇas should sit facing the east; at a *Pitrya Śráddha*, the three should sit facing the north; or there may be only one [at each of those *Śráddhas*]. The same rule holds in the case of a *Śráddha* (oblation) to the mother's ancestors. The [worship of the] *Viśve Deva* [in these two cases] may be either single or [separate].[3]

229. Having poured water into their hands, and also given *kuśas* for a seat, he should with their permission invoke the *Viśvedevas*, with the *ṛich* beginning '*Viśvedevásah.*'

230—233. Then having scattered barley-grains on the ground, and poured water with the *ṛich* beginning with '*Sannodevi*' in a vessel purified with *kuśa* grass, and then having thrown therein barley-grains with the formula [beginning with] '*yavosi*' [230],

He should pour *argha* (water) into their hands with the formula [beginning with] *Yádivyá*. Having given water, unguent, flowers, incense, a lamp [231],

And having given a garment and water for washing hands; then having thrown the sacred thread on the right shoulder, having made a revolution to the *manes* from the left [232],

Having given doubled *kusa* grass, and having with their [*i. e.* Bráhmaṇas'] permission invoked [the manes] with the *ṛich* [beginning with] '*Úsantastvá,*' he should mutter [the *mantra* beginning with] '*Áyantunah.*' [233.]

234—242. Sesamum grains should be substituted for barley-grains; he should make oblations, &c. as before. Having offered water [into their hands], he should carefully collect it in a vessel [234],

And keep the vessel turned downwards [with the *mantra* beginning with] *Pitribhyah sthánamasi* (thou art the abode of the manes, &c.).[4] Having taken boiled rice mixed with ghee, having requested permission of [the Bráhmaṇas] to offer a sacrifice to the fire [235],

[1] The word is अपराह्ण, which is the fourth of the five divisions of the day.

[2] Compare Manu ch. iii., vv. 125, 206.

[3] Compare Manu ch. iii., v. 208.

[4] Compare Manu ch. iii., v. 210.

Being commanded (by them) 'Do,' and having given oblations to fire as in the *Pitṛiyajña* (oblation to the manes), he should carefully distribute the remains of them into vessels [236]

Procured according to his means, especially silver ones.[1] Having placed the boiled rice in vessels, and having consecrated them with [the formula beginning with] *'Pṛithivi Pátram'* [237],

He should place the thumb of the Bráhmaṇas on it with [the *mantra* beginning with] *"Idam Vishṇu"* (this is Vishṇu, &c.). Having muttered the *gáyatrí* with the *vyáhṛitis*,[2] together with the three *ṛichs* [beginning with] *"Madhuvátáh"* [238],

He should address them—'[eat] as you please'; and they on their part should eat without uttering a word. Without anger, without bustle, he should serve them with the desired food and *havishya* (objects of oblation)[3] [239],

Till their gratification; having meanwhile muttered holy texts[4] and the former prayers. After having asked [the Bráhmaṇas] with food in his hand if they are satisfied, and having obtained their permission [with regard to the use of the] remainder [240],

He should spread the remaining food on the ground, giving water once [into the hands of each Bráhmaṇa]. Having taken all the boiled rice mixed with sesamum, he should with his face to the south [241],

Offer rice balls [to the manes] near the remains of the food [eaten by the Bráhmaṇas] as in the *pitṛiyajña* (oblations to the fathers).

[The *piṇḍas* (balls) should be made as big as the mouth of a child of two years can contain; and should be offered on the ground separately].[5]

Thus [he should give rice-balls] even to the manes on the maternal side.[6] Then he should give water [to Bráhmaṇas] to sip.[7] [242.]

243. Then he should cause a *Svastiváchya* (a request to the Bráhmaṇas to pronounce a benediction), and the *Akshayyodaka* (water which causes the oblation to be everlasting) to be made. Having given presents [to the Bráhmaṇas] according to his means, he should request permission to hear *Svadhá* repeated.

---

[1] Compare Manu ch. iii., vv. 210—212.

[2] See supra p. 162, verse 15 and the note.

[3] See for the list of the different kinds of *havishya*, Manu ch. iii., vv. 256, 257.

[4] See Manu ch. iii., v. 232.

[5] The portion within the brackets is the translation of a verse found in the Bombay lithographed edition A of Yájñavalkya.

[6] Compare Manu ch. iii., vv. 215, 216.

[7] Compare Manu ch. iii., v. 218.

244. And being commanded by those Bráhmaṇas to do so, he should say—'let *Svadhá* be pronounced on the manes.' Then they should pronounce—'let *svadhá* be.' It being pronounced, he should sprinkle water on the ground.

245—246. And when the performer of the oblation has said—'Let *Viśvedevas* be pleased,' [and when] the Bráhmaṇas have replied, he should mutter [the following]:—'Let givers increase in our family; let our family increase; let the Vedas prosper [245];

Let our faith not vanish, and let us have much to give.' Having said thus, having spoken sweet words, and fallen [at the feet of the Bráhmaṇas], he should cause the *Visarjana* [sending away of the manes, etc.] [246.]

247—248. He should with a delighted heart dismiss them, beginning with the father and with the formula [commencing with] *Váje.* Having turned up the *arghapátra* (vessel for water), in which the water [dropping from the hands of the Bráhmaṇas] was collected before [247],

He should dismiss the Bráhmaṇas. Having followed them [to some distance], and returned after going round them, he should eat the remnant of the food eaten by the manes. [248.]

249—250. He and the Bráhmaṇas should abstain from sexual intercourse that night. In this same way he should offer oblations to the manes in the *vriddhi* and *Nándí* [ceremonies], with [the difference that] the revolution [is to be from left to right] [249],

[With] rice-balls mixed with curds, and the jujube fruit; [all] the ceremonies [should be performed] with *yava* (barley-grains). In an *ekoddishṭa* oblation, there is no oblation to the gods, and there is only one vessel for *argha* (sacred water) and *pavitraka* (a braid of *kuśa* grass.) [250.]

251—252. There is [further] no *áváhana* (invocation of the manes) and *agnaukaraṇa* (oblation to the fire), and the sacred thread should be on the right shoulder. [The performer of the *Ekoddishṭa*] has further to say '*upatishthatám*' (stand up) instead of *Akshayya* (everlasting), [which is done in the aforementioned oblations]. At the time of dismissing the Bráhmaṇas [251],

He should say 'be satisfied,' and they [should answer] 'we are satisfied.' For the preparation of *argha* he should have four vessels. [252.]

253. [Those vessels should] contain wet sandal-powder, water, and sesamum; the water in the vessel for the deceased should be poured into the vessels sacred to the manes with the two formulas [beginning with] *Yesamanah.* He should do the rest as before.

254—256. This [is called] *Sapiṇḍíkaraṇa* (associating the deceased with the manes). The *ekoddishṭa* ceremony [should be performed]

even for a deceased female. Even when *Sapiṇḍíkaraṇa* of the deceased has taken place within a year [from his death] [254],

The food and the pot of water should be given [to a Bráhmaṇa] for a year. Every month for a year, a *Śráddha* should be performed on the [lunar] day of death [255];

Similarly [after that, once] every year. The first [*Śráddha*] is to be performed on the eleventh day. He should offer the *piṇḍás* (balls) to a cow, sheep, or a Bráhmaṇa, or throw them into fire or water, [256].

257—260. He should not remove the remains of the food eaten [by Bráhmaṇas] in their presence. The manes are satisfied by *havishya* (food fit for sacrifice) for a month; by food mixed with milk for a year [257];

And by the flesh of fish, the red deer, ram, bird, sheep, spotted deer, black deer, antelope, wild boar and hare respectively[1] [258],

For a period progressively increasing by a month. He who offers [to the manes] the flesh of a rhinoceros or of the *Mahášalka* (a kind of fish), or honey, or the food of the sages [259],

Or of the red sheep, or a vegetable, or the flesh of an old white sheep, or makes any offerings [to the manes] at Gayá attains eternal pleasures. [260.]

261—263. So also he who gives on the *Varsháṭrayodaśí* (the fourteenth day of the dark fortnight of Bhádrapada), especially when the lunar asterism on that day is *maghá*. A [worthy] daughter, son-in-law, beasts,[2] good sons [261],

[Success in] a game, husbandry and commerce, whole-hoofed and cloven-hoofed beasts, sons shining with learning, gold and silver with other [*i. e.* base] metals [262],

Superiority over his tribe are together with all desired objects obtained by him, who offers oblations on all the lunar days [of the fortnight][3] save the fourteenth respectively.[4] [263.]

264—271. On that day [viz., the fourteenth,] oblations are offered to those who are killed by weapons. Heaven, offspring, glory, valour, crop, strength [264],

Sons, superiority, good luck, prosperity, leadership, good, unresisted authority, commerce, and the like [265],

Health, fame, freedom from sorrow, beatitude, wealth, [knowledge of] the Vedas, success in medical treatment, any metal except gold and silver, also cows, goat, sheep [266],

---

[1] Compare Manu ch. iii., vv. 237, 272.

[2] Such as the goats and the like.

[3] The Vír. says these lunar days should be those of the dark fortnight.

[4] Compare Manu ch. iii., v. 276.

Horses and long life—all these objects he obtains, who duly performs the *Śráddha* on the different asterisms beginning with *Kṛittiká* and ending with *Bharaṇí*[1] [respectively] [267],

With faith and belief and without arrogance and envy. The manes are represented by the sons of Vasu, Rudra, and Aditi, who are the real gods in a *Śráddha* [268],

And are satisfied by a *Śráddha* [offered] by the mortals. Life, progeny, wealth, learning, heaven, salvation, happiness [269],

And also a kingdom is given to men by the manes when satisfied.

---

## WORSHIP OF GAṆAPATI.

For the accomplishment of obstructions, Vináyaka (Gaṇeśa) was constituted [270]

The head of the Gaṇas by Rudra (Śiva), Brahmá and [Vishṇu]. Hear the description of one who is possessed by him [*i. e.*, Vináyaka]. [271.]

272. In dreams he enters the depths of water, and sees head-shaved persons, and mounts carnivorous animals covered with red garments.

273. He [in dreams] sees himself in the midst of *cháṇḍálas*, asses and camels. Whilst going, he fancies himself followed by others.[2]

274. One, who has been possessed by him, becomes absent in mind, fails in his undertakings, is dejected without cause, and will not get his kingdom even though he be born of a king.

275. [When so possessed], a damsel does not obtain a husband, a woman does not conceive or bear children; a *Śrotriya* does not obtain preceptorship, and a pupil, learning.

276. Nor a merchant, profit; nor a husbandman, crop. His [*i. e.* of the individual possessed] bathing should be effected on an auspicious day according to the following ceremony.

277. [He should be] smeared with an ointment of white mustard with *ghee*, and should have his head smeared with *sarvaushadhi* (an assemblage of certain herbs)[3] and various perfumes.

278—279. [He should then be] seated on the *Bhadrásana* (blissful seat), and should have the *Svasti* (blessing) pronounced upon him by

---

[1] Note that the usual order of asterisms in astronomical works commences with *Aśviní* and ends with *Revatí*; while their order in the Vedic works commences with *Kṛittiká* and ends with *Bharaṇi*.

[2] Vij. applies the latter hemistich of this verse to dreams, but the Vír. disapproves of this interpretation. The latter has been followed in the above rendering.

[3] Vij. explains the term सर्वौषधिः thus:—

कुष्टं मांसी हरिद्रे द्वे मुराशैलेयचन्दनम् ।
वचाकर्पूरमुस्तंच सर्वौषध्यः प्रकीर्तिताः ॥

worthy Bráhmaṇas. [Having obtained] earth from the stable of horses and elephants, from an ant-hill, from the junction [of rivers], or from a lake [278],

*Rochaná* (a kind of yellow substance), perfumes, and *guggula* (a fragrant gum resin), he should throw them into waters which were brought by him in four vessels of the same colour from a lake. [279.]

280—285. Then the blissful seat[1] on the red leather of a bull should be spread. 'With the water whose vitality is thousand-fold, whose flow is hundred-fold, which was consecrated by the sages [280],

I sprinkle thee with that; may that purifying water purify thee. May King Varuṇa, the sun, and Bṛihaspati give thee prosperity' [281];

And so may Indra and Váyu, and so the seven *Ṛishis*. Any awkwardness about thy hair, in the parting line of thy hair [on the crown], in thy head [282],

In thy forehead, in thy ears, in thy eyes, may always be destroyed by these waters.' When he has so bathed, mustard oil by means of a ladle made of the *Udumbara* tree (*Ficus glomereta*) [283],

Should be poured on the head with *kuśa* grass in the left hand [of the preceptor], as an offering made to Mita, Sammita, Śála, Kaṭaṅkaṭa [284],

Kúshmáṇḍa, and Rájaputra,[2] with the word *Sváhá* added at the end of each. An offering [of boiled rice] should then be made in the names [of Gaṇapati abovementioned] with salutations. [285.]

286—289. Spreading *kusás* on all sides in a basket placed where four roads meet, he should give rice imperfectly unhusked, boiled rice mixed with sesamum flour [286],

Fish, raw and cooked flesh only of [the just mentioned] kind, a variegated flower, perfumes, also the liquor of three kinds [287],

A *múlaka* (a radish), a *púraka* (a meal-cake), an *apúpa* (a sort of cake made of wheat), a string of *Uṇḍeraka* (a dish made of rice), rice mixed with curds, *páyasa* (preparation of milk), flour mixed with coarse sugar, and *modakas* (sweet balls) [288];

Having taken all these, and rested his head on the ground, he should then invoke Ambiká, the mother of Vináyaka [289].

290—294. Having presented her with offerings and a handful of *dúrvás* [grass], mustard and flowers, [a prayer should be made thus]:—'Grant me, oh Goddess, beauty; grant me prosperity; [290]

'Grant me sons, grant me wealth, grant me all my desires.' Then clothed in white, garlanded with white flowers, and anointed with unguents [291],

---

[1] The *Bhadrásana*, says Vij., is a mat made of *Bhadraparṇi* plant.

[2] The above are six names of Gaṇapati.

He should feed the Bráhmaṇas, and present them and also his preceptor with a pair of garments. By thus worshiping Vináyaka and the *Grahas* (planets) according to rule [292],

He earns the fruit of his acts and incomparable splendour. He who always renders worship to the sun and makes a *tilaka* (a golden or silver image) of him, or Skanda [293],

Or the great Gaṇapati shall give salvation.

---

## PROPITIATORY RITE FOR *GRAHAS* (PLANETS).

He who is desirous of wealth or peace should offer a sacrifice to the *graha* (planets). [294.]

295—297. So should he who wishes rainfall, life, and strength; as also he who practises exorcism. The sun, the moon, the son of the earth [Mars], the son of Soma [Mercury], Jupiter [295],

Venus, Saturn, Ráhu, and Ketu: these are declared to be the *grahas* (planets). Of copper, crystal, red sandal-wood, two of gold [296],

Silver, iron, lead, and bell-metal, the *graha* (images of planets) should be made respectively; or they should be represented in their own colours on cloth or on marked ground[1] with unguents. [297.]

298. They should then be presented with garments and flowers of their respective colours; as also with perfumes, bracelets, and incense.

299—304. He should also make oblations of boiled rice to every one of them, with their several formulas [in the following order commencing with] *Ákrishṇena, Imam Deváh, Agnirmúrdhádivah kakut* [299],

*Udbudhyasva, Brihaspate Atiyadaryah, Annátparisrutah* [300],

*Sanno Devih, Káṇḍát,* and *Ketum kriṇvan. Arka, Palásá, Khadira* (Acacia Catechu), *Apámárga, Pepul* [301],

*Udumbara* (Ficus Glomerata), *Śamí, Dúrvá,* and *Kuśa* are the *samidhs* (sticks to be offered in sacrifice) respectively [for the several planets]. To each of them should be sacrificed one hundred and eight or twenty-eight [302],

*Samidhs,* wetted with honey and ghee, or curds and milk. *Guḍaudana* (food mixed with coarse sugar), *páyasa* (preparations of milk), *havishya* (food fit to be sacrificed), and *sháshṭika* (paddy that is grown in sixty days) boiled in milk [303],

Rice mixed with curds, with ghee, with sesamum, with flesh, and *chitránna* (a dish of rice) should be respectively offered to Bráhmaṇas whom a wise man should feed in honour of the planets. [304.]

---

[1] So is the word *Maṇḍalaka* explained by the Vír.

305—306. This should be done after properly honouring them according to the giver's power and means. A milch cow, a conch shell, a strong bull, gold, cloth, a horse [305],

A black cow, a weapon, and a sheep are declared to be the respective presents [in honour of the planets]. Whoever has any evil *Graha* should specially honour him [306].

307—311. Brahmá has bestowed on them [*i.e. Grahas*] a boon, viz., 'being honoured you will honour.' The rise and fall of monarchs, and the existence and non-existence of the world, are dependent upon the *Grahas* [planets] [307];

They are, therefore, highly to be honoured.

## THE DUTIES OF A KING.

A king should be very energetic, learned,[1] mindful of the past, subservient to the sages [308],

Modest, even-minded, of a noble family, truthful, pure, prompt in action, of powerful memory, abhorring the wicked, not carping [309],

Righteous, without a bad habit, talented, brave, skilled in concealing a secret, a concealer of his assailable points, skilled in the knowledge of self, polity [310],

Agriculture and trade, and the three (Rich, Yajush and Sáma Vedas). He should appoint talented, nobly descended, steady and blameless ministers.[2] [311.]

312—313. In administering the kingdom, he should first consult them, then the Bráhmaṇa,[3] then himself. He should appoint a *Purohita* (family priest) who knows astrology, who is possessed of learning[4] [312],

And who is skilled in polity, and the Atharva-Áṅgirasa (hymns of the Atharva Veda). He should without fail select *Ritvijs* for the performance of the Vedic and Smṛiti rites.[5] [313.]

314. He should perform, according to the ritual, sacrifices with large presents. He should bestow on Bráhmaṇas comforts and various objects of wealth.

315—316. That which is given to the Bráhmaṇas is an inexhaustible treasure of kings.[6] Being without a flow, without destruction, and untainted with expiations [315],

[1] So Vij. The Amarakośa gives स्थूललक्ष्य as a synonyme of वदान्य (a generous man).
[2] Compare Manu ch. vii., v. 54.
[3] Vij. says the family priest is here meant.
[4] Manu ch. vii., vv. 78, 79.
[5] Ib. ch. vii., vv. 56—59, 78, 79.
[6] Ib. ch. vii., v. 82.

An oblation to a Bráhmaṇa is declared in this world to be superior to a sacrifice in fire. One should seek by fair means what is not obtained, and should preserve with care what is obtained.[1] [316.]

317. [He] should increase by honest means what is preserved, and should bestow what is increased on deserving recipients. A king having given land or a corody should commit it to writing.

318—320. For the information of future blessed kings, the king having recorded on a piece of cloth or copper-plate marked with his seal on its face [318],

His ancestors and himself, and the measurement of the gift (land) and a description of its boundaries [319],

Should issue a perpetual edict bearing his hand and date.[2] He should settle in a country which is pleasant, favourable to beasts, affording means of subsistence, and containing jungles. [320.]

321—322. In such a country he should erect forts for the protection of his subjects' property and for his own safety.[3] In every department he should employ clever, competent and blameless officers [321],

Well up in matters of receipts and disbursements. There is no higher duty for kings than earning in battles.[4] [322.]

323—324. He should give that wealth to Bráhmaṇas and constant security to his subjects. They who without turning their back [on their enemies] are killed in battles for the sake of land [323],

Go to heaven, if they do not use treacherous weapons, as do the *Yogins* (ascetics).[5] Every step [that is taken in advance] when [one's fellow soldiers] are broken down and are retreating, is equal to [the performance of] a sacrifice. [324.]

325—326. The king obtains the merit of all those who die while retreating.[6] Him who says 'I am thine,' who is impotent, who is without a weapon, who is [fighting] at the instigation of another [325],

Who has turned away [from the battlefield], or who is a spectator of fighting, he should never kill.[7] Protecting himself and his subjects, he should after rising personally inspect receipts and disbursements [326].

327. Then having attended to State business, he should after bathing eat at his pleasure. He should deposit into his coffers the gold brought by his agents.[8]

328. Then in council, he should see the spies, and send away his agents. Afterwards he should enjoy as he may like, or be in the company of his ministers.

---

[1] Compare Manu ch. vii., vv. 82—84, 99.
[2] Compare Manu ch. vii., v. 135.
[3] Id. ch. vii., vv. 69, 70.
[4] Id. ch. vii., vv. 60—62, 81.
[5] Id. ch. vii., vv. 87—90.
[6] Id. ch. vii., vv. 94, 95.
[7] Id. ch. vii., vv. 91—93.
[8] Id. ch. vii., v. 80.

329. Then having reviewed the army, he should hold an interview with the commander. Having offered his evening prayers, he should listen to the secret converse of the spies.

330. Then he should take his meals with music and dancing, and study the Veda. He should go to sleep with the sound of musical instruments, and awake with the same.

331. Having arisen, he should apply himself to the [study of] *śástras* and his other duties. He should then despatch the spies after honouring them to his own feudatories and to other kings.

332—338. Then after being gladdened by the *Ritvij* (sacrificer), the *Purohita* (family priest), and the *A'chárya* (preceptor), with benedictions, and having seen astrologers and physicians, he should present them, as also the *Śrotriyas*, with cows, gold, lands [332],

Marriage gifts and houses. [The king] should be forbearing to the Bráhmaṇas, candid to his friends, angry towards his enemies [333],

And a father to his servants and subjects. Protecting his subjects with justice, he receives one-sixth of their merit [334];

For, protection of the subjects is superior to all gifts. He should protect his subjects from the oppression of cheats, thieves, vagabonds, depredators [335],

And particularly the *Káyasthas* (scribes). If being unprotected the subjects commit any sin [336],

The king shares half of it; for he takes taxes [from the subjects]. Having learnt from the spies the conduct of his officers [337],

He should honour the good and punish the wicked. Those who receive bribes, he should deprive of their wealth, and banish [338].

339—344. He should always entertain the *Śrotriyas* with gifts, honour, and hospitality. That king who enriches his exchequer by wronging his subjects [339],

Soon loses his fortune, and goes to ruin with his family. The fire produced from the heat [*i. e.* anguish] of the subjects caused by their oppression [340],

Does not cease until it has burnt the fortune, family, and life of the king. All that very duty of the king [which he pursues] in protecting his own kingdom [341],

Devolves on him when becoming master of another kingdom. Customs, laws, and family usages which obtain in a country [342]

Should be preserved when that country has been acquired. Since deliberations are the foundation of sovereignty, they should be kept secret [343],

So that none shall know any regal acts until their accomplishment.

He should regularly consider as inimical, friendly, and neutral the neighbouring sovereign, the one next, and the one next to that [respectively] [344].

345. He should practise conciliation and the other [modes of diplomacy] towards the neighbouring kings in their order.[1] The means of success are negotiation, bribery, sowing dissension, and open attack.[2]

346—348. These being properly used cannot but succeed. As for open attack, it should only be resorted to in the absence of any other. To peace, war, march, halt, recourse to a mightier king [346],

And stratagem,[3] he should have recourse as time may need. He should invade an enemy's kingdom when it is full of corn and other provision [347],

And when the enemy is destitute [of army], and when himself possesses spirited animals and men.[4] The accomplishment of an object is divided between fate and exertion [348].

349. Of these, the fate is the manifestation of one's acts in former life. Some expect success from fate, some from accident, some from the lapse of time, and some from effort.

350—351. Men of genius believe in the efficacy of the combination [of all these]. As a chariot cannot be put into motion with a single wheel [350],

So does fate not succeed without exertion.[5] The acquisition of friends is superior to the gain of gold and land.[6] [351.]

352—353. Hence he should endeavour to get them; he should scrupulously maintain truth. The king, the minister, the subjects, a fortress, the treasury, the army [352],

And friends;—these elements are declared to be the seven constituents of a kingdom. Therefore having obtained a kingdom, the king should inflict punishment on the wicked. [353.]

354. Righteousness was formerly created by Brahmá in the form of punishment. To inflict that [punishment] with justice is impossible for one who is covetous and fickle-minded.

355—356. [That is possible only] for him, who is truthful, blameless, properly aided, and talented. That [punishment] inflicted according to law, cannot but please the world, together with gods, demons and men [355];

If imposed otherwise, it must anger the world. Unlawful punishment by the king is the cause of his loss of heaven, fame, and subjects. [356].

---

[1] Vij. says in the order of the directions commencing with the last.

[2] See Manu ch. vii., vv. 158, 159, and 198.

[3] For a full explanation of these terms see Manu ch. vii., vv. 160—168.

[4] Compare Manu ch. vii., vv. 109—112.

[5] Compare Manu ch. vii., v. 205.

[6] Ib. ch. vii., v. 208.

357—361. Proper punishment procures him heaven, fame, and success. Even a brother, a son, an ecclesiastic, the father-in-law, or the mother's brother [357],

Failing in his duty, is liable to punishment by the king. That king who shall punish offenders, and execute those deserving capital punishment [358],

Shall obtain the benefit of sacrifices consummated with large gifts. Having thus duly thought of the [reward of] sacrificial merit [359],

The king should attend personally to judicial proceedings in company of worthy persons in the order of the classes. The families, castes, the *Śreṇis*, the *Gaṇas*, and the *Jánapadas* [360],

Who swerve from their duty should be chastised and maintained in their respective duties. A particle occupying the space of a ray of the sun passing through an aperture is declared to be a *trasareṇu*. [361.]

362—363. Eight of them make a *likshá*. Three *likshás* make a *Rájasarshapa*. Three of them make a *Gaura* (*sarshapa*) ; six *Gauras* make a *yava* (a barley corn) of the middle size ; three *yavas* [362]

Make a *Krishṇala* ; five *Krishṇalas* make a *másha* ; sixteen *máshas* make a *Suvarṇa* ; four *Suvarṇas* make a *Pala* [363].

364. Two *Krishṇalas* make a silver *másha* ; sixteen of them make a *Dharaṇa*. A *Śatamánapala* is indeed made by ten *Dharaṇas*.

365. Four *suvarṇas* make a *Nishka*. A *Kárshika* is a *paṇa* of copper. The *uttamasáhasa* (the highest) fine is one thousand and eighty *paṇas*.

366—368. Their half is declared the *Madhyama* (the middle) ; its half again is recorded to be the *adhama* (the least). Reprimand, severe language, a fine of money, and death—[366]

All these, or one, or more [of these punishments] should be inflicted according to the nature of the offence. Consideration being had of the offence, place, time, health [367],

Age, the act, and the wealth, punishment should be inflicted. [368.]

End of Chapter I.

# VYAVAHÁRÁDHYÁYA.

## CHAPTER [II.]—CIVIL JUDICATURE.

1. The king, divested of anger and avarice, should attend to administer justice, along with learned Bráhmaṇas,[1] [and] conformably to the precepts of law.

2. Those should be made assessors by the king who have studied the Vedás and Śástrás, who know the law, who speak the truth, and who look to friends and foes with the same feelings.[2]

3. A king who, from press of other work, cannot attend to administer justice, should appoint [in his own place] a Bráhmaṇa learned in all laws, to work along with the assessors.[3]

4. Respectable men,[4] who through partiality or avarice or fear act in a manner opposed to the Smṛitís, should be separately punished with a fine double of the sum in dispute.

5. If one, aggrieved by others in a way contrary to the Smṛitís and the established usage, complain to the king, that subject is one of the titles of Vyavahára or a judicial proceeding.[5]

6. That which the plaintiff relates should be recorded in the presence of the defendant, [and] marked, with the year, the month, the fortnight, the day, the name, the caste, and the like.[6]

7. The answer of the defendant who has heard the plaint, should be taken down in writing in the presence of the complainant.[7] Next, the plaintiff should immediately have evidence written down in support of the matter in dispute.[8]

8. If it succeed, he wins; if it do not prevail, he fails. This legal procedure is declared to be of a fourfold character in litigation.[9]

9. Until the complaint is disposed of, no counter-claim should be allowed to be brought against the complainant, nor should any other

---

[1] Vír. l. 4, p. 2. Vij. like Nílakaṇṭha considers *Nṛipa* as indicative of a Kshatriya generally. See above p. 3, l. 8.

[2] Vír. l. 11, p. 2; see above p. 3, l. 33. Vij. considers that these must be Bráhmaṇas.

[3] See above p. 4, l. 15.

[4] The word is *sabhya*, which means respectable persons fit to sit in a *sabhá*. It is rendered by Borradaile as assessors.

[5] See above p. 2, l. 3; Vír. l. 1, p. 2.

[6] See above p. 9, l. 9; Vír. l. 19, p. 1.

[7] See above p. 10, l. 35.

[8] See above p. 13, l. 11.

[9] See above p. 13, lines 12, 20.

be allowed to charge a person already labouring under a charge; nor should the original declaration be allowed to be changed.[1]

10. But in assaults and offences [like theft], a counter charge is allowable. A substantial surety from each party should be taken for the satisfaction of the judgment.[2]

11. Where a claim is [first] denied [by the defendant, but subsequently] proved, he should pay [to the plaintiff] the [sum of] money [claimed], [and] to the king a sum equal to that [claimed by the plaintiff]. He who advances a false claim [against another] should pay [to the king] a sum of money double of that [falsely] claimed [by himself].

12. In [accusations of] felony, theft, defamation, assault, injury to a cow, or [the commission of] a sin, [and in accusations] against a woman [of unchastity or absconding], [the judge] must instantly call upon [the defendant] to refute [the charge]. In cases other [than these], the time [for answering the charge] depends upon the will [of one of the parties to the suit, or the *sabhya* (respectable men), or the judge.]

13—15. He who shifts from place to place, licks his lips, whose forehead perspires, whose countenance changes colour[3] [13],

Who with a dry tongue and stumbling speech talks much and incoherently, who does not heed the speech or sight [of another], who bites his lips [14],

Who by mental, vocal and bodily acts falls into the sickly state, is considered a tainted person whether [he be] a complainant or a witness.[4] [15]

16. He, who depending on his personal [knowledge of the case], attempts to substantiate a doubtful claim; he who absconds, and, when summoned, does not say anything—[such persons] are said to be false [plaintiffs], and deserve punishment.

17. When there are witnesses on both sides, witnesses of the first party [are to be examined]. If the first side be invalidated, witnesses of the other side should be examined.[5]

18. In the case of a suit accompanied with a stipulation, the defeated party should be compelled to pay [to the king] a fine and also the sum stipulated for by him, and to the [successful] creditor, the money [in dispute].[6]

---

[1] See above p. 13, l. 29.
[2] See above p. 13, l. 29, and p. 14, l. 12.
[3] See above p. 15, l. 5.
[4] Vir. l. 30, p. 1.
[5] See above p. 14, l. 3.
[6] This couplet refers to cases in which the plaintiff, or the defendant, or both agree that the defeated party shall pay to the successful one a certain sum of money.

19. Having discarded that which has [only] an appearance of reality, a king should decide suits in conformity to the nature of things; for even an honest claim, if not properly pleaded, is [liable to be] defeated by [the adverse party merely satisfying] the legal formalities.

20. [Where the defendant] does not admit several [of the particulars] written [in a plaint], which is afterwards proved in part, he should be compelled by the king to give the whole claim. [The plaintiff] should not be allowed to recover [from the defendant] what had not been mentioned [in the plaint].

21. When two Smṛitis disagree, that which follows equity, [as guided by] the practice of the old should prevail.[1] But the rule is that law is stronger than equity.[2]

22. Evidence is laid down to be writing, possession, and witnesses. In the absence of any one of these, a form of an ordeal is prescribed.[3]

23. In all money disputes, evidence [about the plea] preponderates. In the case of pledges, gifts, and sales, evidence with regard to the claim preponderates.

24. To him who sees another enjoy his land for twenty, or his money for ten years, loss [of that thing] occurs.[4]

25—26. With the exception of pledges, boundaries, open deposits, wealth belonging to persons insane or under age, and likewise sealed deposits, and wealth belonging to sovereigns, women, or learned Bráhmaṇas; [25]

The tribunal should compel him, who encroaches upon pledges and the like, to restore the property [in dispute] to the owner, and to pay a fine equal in value to the king, or as much as he is able to pay. [26]

27. Title preponderates over possession, unless the latter be hereditary. There can be no strength in any title, if it be not accompanied at least by a brief enjoyment.

28. He who has acquired a title, must, when the title is impugned, prove it; neither his son, nor his [son's] son [is required to prove it]; for [in their case] possession carries greater weight.[5]

29. If a person whose title is impugned should die, his heir should establish it; in such a case, enjoyment without title is no proof.[6]

---

[1] See above p. 5, l. 18.

[2] Such as, says Vij., that of Uśanas, &c. but even then it should be conformable to law. See Vír. l. 6, p. 1.

[3] Vír. l. 33, p. 2, see above p. 15, l. 14.

[4] See above p. 22, l. 15; Vír. l. 62, p. 2.

[5] See above p. 21, l. 33.

[6] See above p. 22, l. 8.

30. Officers appointed by the king, the *Púgas*, the *Śreṇis*, and the *Kulas*, should be respected, in the order in which they are mentioned, in matters of legal proceedings between men.[1]

31. Transactions done through force or fraud shall be deemed to be void; so also those done by women, at night, in the middle of the house, outside [the village], and by enemies.

32. A transaction entered into by a person intoxicated, insane, afflicted with disease, in difficulties, or by a minor, or one threatened, or the like, does not hold good; as also that which is improper.[2]

33. Wealth lost and recovered by the king should be restored to the owner [after due identification]; if [the owner] fail to supply the necessary details [of the article alleged to be lost], he shall deserve a fine equal [thereto].

34. The king having found treasure-trove, should give half to the twice-born; but a learned Bráhmaṇa finding [treasure-trove,] may keep the whole, for he is the lord of all.[3]

35. The king should give a sixth part of treasure-trove found by any other person. In case where information is not given by the finder, he [the finder] must be made to pay a fine[4] [in addition to the king's share].

36. The king should pay wealth robbed by thieves to his country's people; if he do not, he incurs the sin[5] of the robbed.

---

## RECOVERY OF DEBTS.

37. An eightieth part [of the principal] is the monthly interest, when a pledge has been delivered; otherwise it may be in the direct order of the classes, two, three, four, or five[6] [per cent].

38. [Borrowers] who travel through forests [should pay] ten, and those who traverse the ocean twenty, in the hundred;[7] or all should pay what they agree to among all classes.

39. The utmost [increase a creditor can lawfuly exact from his debtor consists], in the case of female beasts of their progeny; in the case of fluids, of their eight-fold; in the case of cloth, corn, and gold, of their four-fold, three-fold, and two-fold [respectively].

---

[1] See above p. 4, l. 27; Vír. l. 12, p. 2.

[2] Vij. explains this last general class of void contracts, to be contracts between a master and a pupil, husband and wife, the father and son, and the master and servant. Vij. says that this text discourages transactions between the aforesaid persons, but does not prohibit them entirely.

[3] See above p. 120, l. 25.

[4] See above p. 120, l. 27. Vij. gives the word *áharet'* the sense of giving, in order to bring the present text into conformity with one of Vasishṭha and another of Manu.

[5] Manu (ch. viii., v. 40) says the sin of the robbers, and this seems more reasonable.

[6] See above p. 102, l. 35.

[7] See above p. 103, l. 4.

40. [A creditor] recovering an acknowledged debt will not be liable to the blame of the king; [and] if the debtor should complain to the king, he should be fined and made to pay the debt.[1]

41. A debtor shall be made to pay his creditors in the order of loans, after discharging [those of] a Bráhmaṇa, and afterwards of the king.[2]

42. The king shall make the debtor pay to him ten in the hundred of the awarded [claim], and the successful creditor to pay five in the hundred.[3]

43. A disabled [debtor] of an inferior class[4] should be made to work for [the payment of] his debts; a disabled Bráhmaṇa,[5] however, should be made to pay gradually, according to his ability.[6]

44. When a creditor does not receive back a loan tendered, it will from that time carry no interest if deposited with a third person.[7]

45. When the head of a family is either dead or gone to a remote country, his heirs should pay that debt which may have been incurred for the family by undivided members.

46. A woman need not pay the debts of her husband or son; nor the father, those of his son; nor the husband, those of his wife; unless contracted on account of the family.[8]

47. The son shall not pay the paternal [debts] contracted for wines, lust, and gambling, or due on account of the unpaid [portion] of a fine or a toll, or [on account of] an idle promise.[9]

48. Among herdsmen, vintners, dancers, washermen, and hunters, the husband shall pay the debts of his wife; because his livelihood depends upon her.[10]

49. A woman shall pay the debts agreed to by her, or contracted by her jointly with the husband or by herself alone; she shall pay no other debts.[11]

50. When the father is abroad, dead, or immersed in difficulties, his debt, proved by witnesses, if disputed, should be paid by the son and grandson.[12]

---

[1] See above p. 110, l. 21; Vír. l. 108, p. 2.

[2] See above p. 111, l. 14. *Nṛipati*, says Vij., means a Kshatriya; Vír. l. 105, p. 1.

[3] See above p. 111, l. 1; Vír. l. 111, p. 1.

[4] Vij. says the same rule applies in the case of a disabled debtor of the same class.

[5] Illustrative of one of a higher class, according to Vij.

[6] See above p. 110, l. 17; Vír. l. 104, p. 2.

[7] See above p. 103, l. 35; Vír. l. 94, p. 1.

[8] See above p. 114, l. 29; Vír. l. 109, p. 1. Vij. says that whoever the person that incurs debt, those debts, if for the support of the family, should be paid by the taker of the heritage.

[9] See above p. 113, l. 3; Vír. l. 106, p. 1; Vya. M. and Kam.

[10] See above p. 114, l. 34; Vír. l. 109, p. 2.

[11] See above p. 114, l. 37; Vír. l. 109, p. 2.

[12] See above p. 112, l. 16; Vír. l. 105, p. 2; Kam.

51. He who has received the estate or the wife [of the deceased] should be made to pay his debts, or failing either, the son who has not received an inheritance.[1] In the case of a sonless [deceased] those who take the heritage [should be made to pay].

52. It is declared that among brothers, husband and wife, and father and son, there can be no relations of suretyship, lending, or being witnesses for each other, before partition.[2]

53. Suretyship is ordained for appearance, for trust, and for payment.[3] Sureties [alone] are in the first two cases to be held responsible in [the event of] a default; and in the last case, their sons also.[4]

54. Where a man standing as a surety for the appearance or honesty of another, dies, the sons of the former may not answer [his liabilities] in the case of a surety for repayment [of a debt], the sons shall pay.

55. When there are more sureties than one, they shall pay the debt proportionately. But when they are bound severally, the payment shall be made [by any one of them], as the creditor pleases.[5]

56. When a surety has been made to pay publicly a debt to the creditor, the debtor shall be forced to repay double the sum to the surety.[6]

57. Progeny in the case of female beasts; three-fold in the case of corn; four-fold in the case of cloth; and eight-fold in the case of liquids [are allowed to a surety who has paid the debt on account of the principal debtor.]

58. A pledge not redeemed until the principal is doubled, is forfeited. That with a term of redemption fixed is lost on the expiry of that term; [but] a usufructuary pledge is never forfeited.[7]

59. There shall be no interest if a pledge for custody be used, or a pledge for use be damaged. [A pledge] spoiled, or destroyed, unless by the act of God or the king, shall be made good [by the creditor].[8]

---

[1] '*Ananyáśrita dravya*' :—this is explained by Vij. to mean he who has not got the *anyáśrita dravya* (wealth in the possession of another such as the father, the mother, &c.); in other words, a son who has not received any assets from his indebted father. For further comment see above p. 147, l. 30, and p. 113, l. 13; and Vír. l. 106, p. 2.

[2] See above p. 75, l. 29; Vír. l. 18, p. 2.

[3] See above p. 157, l. 20; Vír. l. 99, p. 2; Kam.; Vya. M.

[4] Vij. says that sons are not liable in the first two cases; and sons' sons in the last.

[5] See above p. 108, l. 17; Vír. l. 101, p. 1; Kam. and Vya. M. Vij. adds on the authority of Kátyáyana that a joint and several liability of suretyship is converted into a joint liability on the death of the surety, so as to make the son of that surety liable to the extent of his father's share in the debt.

[6] See above p. 108, l. 30.

[7] See above p. 106, l. 14; Vír. l. 97, p. 1; and Kam.

[8] Vij. says the pledge is to be restored by means of an equivalent in money. See above, p. 105, lines 10 and 17; Vír. l. 95, p. 1; and Kam.

60. Acceptance of the pledge is [requisite] for the completion of the contract [of pawn]. If it be lost (even) when carefully kept, another must be substituted, or the creditor must receive the amount due to him.[1]

61. A debtor shall be compelled to pay with interest a debt contracted on a *charitra* (friendly) pledge; and to pay twofold a debt contracted on a chattel delivered as an earnest.[2]

62—63. The pledge shall be restored to the debtor offering to redeem it, on pain of the creditor not doing so being deemed a thief. In the absence of the creditor, the debtor may pay the debt to his kinsmen, and take back his pledge [62],

Or appraising it at its value at the time, may let it remain with the creditor, without interest.[3] [On the other hand], when the debtor is not at hand, [the creditor] may sell the pledge in the presence of witnesses. [63.]

64. Whenever a debt under mortgage has become doubled by interest, then the pledge shall be returned, after double the principal has been received out of the produce.[4]

---

## DEPOSIT.

65. That wealth is [said to constitute] a sealed deposit, which kept in a box is delivered into the hand of another, without being described. It is to be returned in the very condition [in which it was entrusted].

66. That which has been removed by [an act of] the king, or God, or thieves, shall not be caused to be restored. [Where] the loss [of a deposit occurs] after [it is] asked [to be returned], and [it is] not returned, [the depositary] should be compelled to make good [to the depositor the loss], and should be fined [a sum of money] equal to [the price of] the deposit.[5]

67. [The bailee] making his living without authority [by the use of the deposit] shall be punished, and made to pay it with interest.[6] With regard to [things] borrowed, or entrusted [by the borrower

---

[1] See above p. 105, l. 36; Vír. l. 96, p. 1; Kam. and Vya. M.

[2] Vij. explains the word *charitra-bandhaka* and *satyaṅkára* in two ways. *Charitra-bandhaka* is either a transaction of pledge upon honor, where the pledgee or the pledger advances or borrows respectively more than the value of the pledge, or a transaction where the religious merit of the pledger is the security pledged. Similarly *satyaṅkára* is either a condition whereby the forfeiture of the pledge is expressly saved under all circumstances; or earnest money. This verse mentions those cases where a pledge is not forfeited even when the furthest limit of interest is reached. See above p. 106, l. 25,; Vír. l. 98, p. 1; Kam.

[3] See above p. 107, l. 1; Vír. l. 78, p. 2; Kam. and Vya. M.

[4] See above p. 107, l. 14; Vír. l. 99, p. 1; Kam. and Vya. M.

[5] See above p. 116, l. 22; Vír. l. 112, p. 1; and Kam.

[6] See above p. 116, l. 10; Vír. l. 112, p. 2; Kam. and Vya M.

to another person to be returned to the owner], or handed over [to a dependent without the master's knowledge,] or deposited [with the owner personally], the same law obtains.

## WITNESSES.

68—69. Men devoted to religious austerities, charitable men, men sprung from high families, truthful men, men devoted to religious observances, men straightforward, men blessed with sons, and men possessed of great wealth, [68]

[Are competent] witnesses, provided they are not less than three, and are devoted to the performance of rites prescribed in the Vedas and Smritis, of the same caste, of the same class; [failing these], all witnesses of any caste or class are mentioned for any other caste or class.[1] [69.]

70—71. A woman, an infant, an old man, a gambler, an intoxicated person, a person possessed by an evil spirit, an infamous person, a performer on the stage, an infidel, a forger, a deformed person, [70]

One degraded from caste, a friend, one interested in the subject matter of a suit, a partner, an enemy, a thief, a ferocious person, one known to be a liar, an outcaste, and the like are inadmissible witnesses.[2] [71.]

72. With the consent of both parties, even one person becomes [sufficient as] a witness, if he be proficient in the duties laid down in the Śrutis and Smritis.[3] In adultery, theft, assaults and a *Sáhasa* (a heinous offence), any person may be a witness.[4]

73. The witnesses should be informed, in the presence of the plaintiff and the defendant, of the worlds to which makers of sins and great sins are destined.

74. He who gives false evidence shall [after death] go to all those regions to which incendiaries and the murderers of women and children are destined.

75. Know that the merit of all your actions in hundreds of previous existences will all belong to him whom you will falsely defeat.

76. A person not giving evidence should be made to pay, by the king, the whole debt, together with a tenth[5] added thereto, on the forty-sixth day.[6]

77. That basest of human beings, who, though acquainted [with the case], does not offer himself as a witness, is, in point of sin and [liability to] punishment, equal to false witnesses.

---

[1] See above p. 24, l. 24.
[2] See above p. 24, l. 28; Vír. l. 47, p. 2.
[3] See above p. 23, l. 28.
[4] See above p. 25, l. 18.
[5] According to Vij., this goes to the king; the rest to the creditor.
[6] See above p. 29, l. 16; Vír. l. 54, p. 2.

78. If the evidence be contradictory, the testimony of the majority prevails; if the witnesses be equally divided, the testimony of the virtuous; and if the virtuous are [equally] divided, the testimony of the most virtuous is to be admitted.[1]

79. He, whose witnesses depose to the truth of the plaint, must succeed. Sure defeat will be his, whose witnesses contradict his plaint.

80. Even after evidence has been given by witnesses, if more trustworthy witnesses, or double the number of witnesses first examined, depose contrary to what they have done, the first witnesses become false.[2]

81. The suborner as well the [false] witnesses should be separately fined double the amount in dispute. It is said that a Bráhmaṇa [under similar circumstances] ought to be banished.

82. He who having been called upon to bear testimony, conceals it under the influence of passion, should be fined eight-fold; if a Bráhmaṇa, he should be expelled.[3]

83. Where men of the four classes would be liable to suffer capital punishment, [if truth were spoken], there indeed a witness may speak untruth. For the purification from that offence, an oblation of rice should be presented to goddess Sarasvatí by the twice-born.[4]

---

## WRITINGS.

84—85. Whatever contract is entered into by mutual consent, there should be a writing [made about it] attested by witnesses, headed with the name of the creditor, [84]

And giving the year, the month, the fortnight, the day [of the month], the names, tribes, and families of the parties, their scholastic titles, the names of their fathers, &c.[5] [85.]

86. When the terms of a contract are written down, the debtor should sign his name with his own hand, adding 'what is written above has the assent of me, son of such a one.'[6]

87. The witnesses should sign, with their fathers' names before [their own] thus:—'Here I, so and so, am a witness.' These witnesses should be even.[7]

88. Then, at the end, the person who wrote the document should write 'at the request of both parties, this is written by me so and so, son of such and such.'[8]

---

[1] See above p. 29, l. 10.
[2] See above p. 29, l. 36.
[3] See above p. 29, l. 25; Vír. l. 57, p. 2.
[4] See above p. 30, l. 4; Vír. l. 58, p. 2.
[5] See above p. 18, l. 16.
[6] See above p. 18, l. 26.
[7] See above p. 18, l. 28.
[8] See above p. 18, l. 30.

89. A writing in one's own hand, though without witnesses, is declared to be evidence, provided it be not caused by force or fraud.[1]

90. A debt evidenced by a writing is binding only on three generations. A pledge can be enjoyed as long as the debt is not returned.

91. If a document is in another country, if it is unintelligible, if it is lost, effaced or stolen; likewise if it is torn, burnt, or cut asunder, [the king] should cause another to be made.[2]

92. The correctness of a disputed or doubtful writing may be established by [comparing it with] something written [by the party writing] with his own hand and the like; [also] by presumption, by confrontation [of parties], by direct proof, by marks, by previous connection, by a [probability of] title, and by inference.[3]

93. The debtor shall write the sums paid by him [at several times] on the back of the document; or the creditor shall give an acknowledgment in his own hand.[4]

94. Having paid the debt, the writing should be caused to be torn, or another should be made for acquittance.[5] The debt which has witnesses [for its security] should be returned in the presence of the witnesses.

---

## ORDEALS.

95. Here the ordeals for clearance [from an accusation] are the balance, the fire, water, poison, and the *kośa* (drinking the water in which an idol has been washed). [These are to be resorted to] in the case of important disputes, and when the plaintiff has agreed to abide [by the result of the ordeal in respect of the relief or the fine].

96. Or, if both the parties like, the other [*i.e.*, the plaintiff] may undergo an ordeal; while the defendant should submit to the penalty [in case the cause of the plaintiff be proved to be just]. In a case of high treason, and in the case of a sin [of the first degree], a party should [be allowed to] perform an ordeal, even though the other party be not willing to submit to the penalty, [if his cause be proved unjust].

97. Having summoned [the party willing to undergo an ordeal] who has bathed with his clothes on, and has fasted [on the day previous]; the chief justice should at sunrise cause him to undergo [any one of] the ordeals, in the presence of the king and Bráhmaṇas.

98. [An ordeal by means of] a balance is [to be resorted to in the case] of women, children, the old, the blind, the lame, Bráhmaṇas,

---

[1] See above p. 18, l. 12.
[2] See above p. 20, l. 1; Vír. l. 61, p. 2.
[3] See above p. 20, l. 12.
[4] See above p. 111, l. 24; Vír. l. 110, p. 1; Vya. M.
[5] See above p. 18, l. 5.

and the diseased. [An ordeal by means of] fire or water is [to be resorted in the case of Kshatriyas and Vaiśyas respectively]. In the case of a Śúdra, [an ordeal by means of] poison weighing seven barley cornsis to be resorted to.

99. Neither [an ordeal by means of] a plough, nor [one by means of] poison, nor [one by means of] a balance, should be resorted to, where the subject matter of the suit is valued at less than a thousand *panas*. But at all times, in the case of offences affecting the king, and in the case of sins of the first degree, [the plaintiff or the defendant, as the case may be] should undergo an ordeal, [with his mind and body] pure.

100—102. When men, versed in holding a balance, have seated the defendant therein, weighed him against an equal weight, marked a line, and caused him to descend, [100]

He should invoke the balance thus: 'oh balance, thou whom gods created in former times, art the abode of truth. Therefore, oh auspicious [balance], speak the truth. Free me from suspicion. [101.]

'Oh mother, if I have committed a sin, then carry me down. If I am pure, carry me upwards.' [102.]

103. When the party submitting himself to an ordeal has rubbed his hands with barley corns, they should be marked; and then seven leaves of *Aśvattha*[1] should be placed on them; and then they should be tied with as many rounds [viz., seven] of thread [for each leaf].

104. Oh purifying fire, thou pervadest the innermost parts of all things; in my hand, tell thou the truth, like a witness who has marked whether there is virtue or sin in me.

105. After he has said so, a smooth red-hot lump of iron, weighing fifty *Palas*, should be placed in both of his hands.

106. Having taken that, he should walk slowly seven *Maṇḍalas* without swerving [from the line marking the *Maṇḍalas*]. A *Maṇḍala* should be known to be a circle with a diameter of sixteen fingers. The same should be the distance between each *Maṇḍala*.

107. After he has thrown away the fire, and rubbed [his hands] with rice, if he is [found] unburnt, he should be acquitted. If the ball falls down [in the course of his walking over the *Maṇḍalas*], or if a doubt arises, he should carry the ball again.

108. Having invoked water with the couplet, *Satyena mâbhiraksha tvam Varuna* (oh thou Varuṇa, protect me for justice's sake), the accused should enter the water, catching hold of the thighs of a man standing in water naveldeep.

[1] *Ficus Religiosa.*

109. Then forthwith, after the arrival of the [first runner stationed at the starting point], the other runner will run [towards the starting point] with the arrow; and if [when he has reached the place], he sees [the accused] under water, then the accused will be considered pure.[1]

110. 'Oh poison, thou art a son of Brahmá. Thou art appointed to ascertain just causes. Protect me from this charge. If my cause be just, be nectar to me.'

111. Having said so, he should swallow the poison called *Śárṅga* produced on the Himálaya mountains. He who can digest it without [feeling] convulsions, should be declared pure.

112. Having worshipped the stern deities, he should collect the water in which they were bathed. The chief justice having cited [*Toya tvam práṇinám práṇas* (oh water, thou art the life of all beings)] should make [the accused] drink three handfuls of that water.

113. There is no doubt but that he is pure on whom no frightful calamity by the act of God or of the king falls within fourteen days (from the time of his taking oath).[2]

---

## PARTITION OF HERITAGE.

114. If the father makes a partition, he may separate his sons [from himself] at his pleasure, giving the eldest the best share; or all may be equal shares[3] [Colebrooke, ch. i., s. ii., 1].

115. If he make the allotments equal,[4] his wives,[5] to whom no

---

[1] In other words, the accused should be able to be under water until the distance of an arrowshot is run over and back by two swift men.

[2] See above p. 30, l. 31.

[3] See above page 40, l. 31. The 'Eastern lawyers,' quoted in the Víramitrodaya, (l. 172, p. l.) take the expression '*at his pleasure*' in the above verse as giving the father absolute power in making such a partition. But Vij. opposes such an interpretation, and considers that even the limited power of unequal distribution, spoken of in the second half of the verse, namely, '*the giving the eldest the best share*,' is exerciseable in the case of self-acquired property only (see ch. i., l. 51, p. l). Mádhava, Kamalákara, Nílakaṇṭha and the Víramitrodaya agree with Vij. Jímútaváhana departs from this interpretation (see above p. 41, l. 29), but his view is refuted by Bálambhaṭṭa, and even by his own commentator Śríkṛishṇa Tarkálaṅkára (see Jím. p. 93). Aparárka, Śúlapáṇi and Subodhiní follow Vij.

[4] The language of the text, as well as the opening words of Vij.'s gloss, seem to shew that a share was allowed to the mother, only in the case of equal distribution; and Aparárka and Váchaspatimiśra (p. 127) have actually so interpreted this verse. But this is in a measure modified by Vij. stating further on, that even in the case of an unequal distribution among sons, the father's wives do get a share. The Vír. in summing up Vij.'s gloss says that under no circumstances is there to be an unequal distribution among the father's wives (l. 173, p. l). The Mayúkha agrees with Vij. (see above p. 43, l. 17).

[5] Bálambhaṭṭa includes among the term wives even childless wives; because the term used is in the plural—*patnyah*.

*Stridhana* has been given by the husband or the father-in-law,[1] must be made partakers of equal portions[2] [Colebrooke, c. i., s. ii., 8].

116. The separation of one able [to earn wealth], and not desiring [a share][3] may be effected by giving him a trifle.[4] A partition made by the father among sons separated with greater or smaller shares, if just, is pronounced valid[5] [Colebrooke, ch. i., s. ii., 11, 13].

---

[1] The husband and the father-in-law are mentioned only as instances of a class of those from whom *Stridhana* is obtained (see Vír. l. 173, p. 1.) Vij. adds that in the case of those wives of the father who have received *Stridhana*, so much is to be allowed as will make up their property equal to the son's share. Colebrooke says that the authority relied on by Vij. for this position, (viz. ch. ii., v. 148,) 'relates to a different subject' (p. 379). The Vír. seems to be aware of this, and distinctly states that the text, which primarily relates to the gift to be made to a superseded wife, is by analogy here made applicable to all wives at the time of partition in order to leave no case unprovided for (see l. 173, p. 2).

[2] "*Partakers of equal portions*":—Colebrooke translates the word *samámśikáh* by partakers of life portions. Colebrooke's rendering seems inaccurate, and would indicate that, according to his reading, the father's wife comes in, not as a sharer, but as one whose maintenance should be provided for at the time of partition. And indeed this view is maintained by Śríkara (referred to by Vij. at ch. ii., l. 58, p. 2), and the Smritichandriká, who say that a mother takes a share when the property is small, and maintenance only when it is large. Vij. (ch. ii., l. 53, p. 2) and Kamalákara distinctly oppose this view, and maintain her position as a sharer.

Bálambhaṭṭa adds that this text does not authorize the allotment of a separate share to the wife by the father during his lifetime, that being opposed to the Hárita's text—जायापत्योर्विभागो न विद्यते (there shall be no division between a husband and wife). The Vír. considers that there is no objection to such an allotment, as it is to be considered in the light of *prítidána* (an affectionate gift) (see l. 174, p. 1).

Váchaspatimiśra says that this text refers to self-acquired property, and Vij. and others agree with this by implication (see above p. 43, l. 17).

[3] "*Not desiring* [a *share*]" :—The word *anikamánasya* (of one not desiring [a share]) has been made by Aparárka to include a son, who, though capable of earning wealth, refrains from work through evil motives.

[4] "*A trifle*" :—Vij. says the trifle is to be given to preclude the descendants of the so separated co-parcener from impugning the division (see above p. 43, l. 8, and p. 44, l. 4).

Aparárka on the strength of a text of Manu (ch. ix., v. 207) observes, that separation with the gift of a trifle here spoken of holds in the case of wealth earned by brothers when united, and does not relate to the wealth of the father, which must in all cases be equally divided.

[5] Śúlapáṇi, and to some extent Aparárka, give the latter hemistich a somewhat literal construction, and say that sons can in no case dispute a division effected by the father, however inequitable it may be.

Jím. specifies the circumstances under which an unequal division might be permitted, and holds that where these do not exist, the division is void (see pp. 89 and 90).

Vij. observes that unequal division shall stand only if it is conformable to the precepts of law; but if otherwise, it shall be set aside. The Vír. (l. 173, p. 1) and the Mayúkha (see above p. 43, l. 10) agree with Vij., the former adding that this text is directory only.

It must be noted that this unequal division is possible only in the case of the father's self-acquired property. Mádhava and Jím. lay this down distinctly in connexion with this text, and the same conclusion follows from the statements of the other authors made

117. After the death of the parents,[1] the sons should divide equally their wealth and debt. The daughters share the residue of their mother's property after [the payment of her] debts,[2] and the issue[3] succeed in their default [Colebrooke, ch. i., s. iii., 1, 8, and 12].

118. Whatever else is self-acquired, apart from and without detriment to the parental estate,[4] as a friendly or a nuptial present, does not belong to the co-heirs [Colebrooke, ch. i., s. iv., 1].

---

elsewhere. The Vír. (l. 174, p. 2), Kamalákara and Mádhava quote the following text of Apastamba (जीवत्पुत्रेभ्यो दायं विभजेत्समम् । : Translation :—The heritage should be equally divided among living sons,) which holds that unequal division is prohibited. Vij. says the same thing in connection with the next verse (No. 117), which relates to partition after the father's death.

[1] "*After the death of the parents*" :—[See above p. 44, l. 10, and p. 96, l. 34.] Jím. says the death of both the parents is a condition precedent for a partition among brothers (see p. 97); but the Vír. (l. 170, p. 1) controverts this position, holding that children succeed to the wealth of their parents severally when they die.

[2] "*After* [*the payment of her*] *debts*" :—Vij. says that daughters succeed to the wealth of their mother, but have no responsibility for her debts. So, where the mother's property falls short of, or is equal to her debts, it goes to the sons who have to pay the debts (ch. ii., l. 49, p. 2).

[3] "*The issue*" :—Vij. says the issue here meant is the issue of the mother. Kamalákara has concluded from this statement of Vij. that he gives the sons the right to succeed to their mother in the absence of daughters, to the exclusion of the daughters' daughters and daughters' sons. But in so doing, Kamalákara has evidently overlooked Vij.'s gloss on v. 145, where the sons are postponed to daughters' daughters and daughters' sons.

Aparárka makes the term 'issue' to be 'issue of the daughter'; but this difference is immaterial, inasmuch as he and Vij. ultimately agree in respect to the order of succession.

Jím. (p. 131) and Vách. (p. 143) apply this latter hemistich to *Yautaka* (nuptial gift).

[4] "*Without detriment to the parental estate*" :—Vij. considers this clause as qualifying the four kinds of gains declared impartible in the latter hemistich of this verse and in the following verse. The result is that Vij. considers the above enumeration of the ways of acquiring self-acquired property as exhaustive, so as to make all other gains not covered by this and the following verses as partible, although they may have been acquired without detriment to the parental wealth. He gives as an example the gains by *pratigraha* (acceptance).

Aparárka opposes this construction, and holds the first hemistich to stand as a comprehensive and independent class of impartible properties, distinct from the four classes that follow in the latter part of this and the whole of the following verse.

Jímútaváhana considers these and all the other texts of Smriti-writers on this subject as only explanatory of the general rule contained in the first hemistich, and concludes that whatever is gained without detriment to the family property is impartible (see p. 181).

The Vír. (l. 220, p. 2) and the Mayúkha (see above p. 67, l. 5) agree with Vij.

119. [Similarly] he, who recovers hereditary property[1] once taken away, may not give [to or share it with] his co-heir; as also what has been gained by learning [Colebrooke, ch. i., s. iv., 1].

120. In cases where the common stock undergoes an increase,[2] an equal division is ordained.[3] Among sons by different fathers,[4] the allotment of shares is according to the fathers [Colebrooke, ch. i., s. iv., 30, and s. v., 1].

121. The ownership of both father and son is the same in land, a corody,[5] or wealth[6] received from the grandfather[7] [Colebrooke ch. i., s. v., 3].

---

[1] "*Recovers hereditary property*":—To this Kamalákara and Aparárka add 'with the consent of the co-heirs.' In the case of hereditary property recovered without the consent of co-heirs, the recoverer has only a right to one-fourth in addition to his legitimate share, in accordance with the text of Śaṅkha quoted in the Mayúkha (see above p. 67, l. 12).

[2] "*Where the common stock undergoes an increase*":—Vij. gives agriculture and trade as instances.

[3] "*An equal division is ordained*":—Śúlapáṇi says that an equal division is here specifically ordained; for, in a partnership with a common stock, the difference in the gains of each individual member is not to be taken into account at the time of partition. Vij. observes that this text is intended to be an exception to the text of Vasishṭha, which allows two shares to the acquirer, and which is cited in the Mayúkha (see above p. 68, l. 28).

[4] "*Among sons by different fathers*":—The Vír. (l. 177, p. 1) and Bálambhaṭṭa adopt the reading *pramítapitṛikáṇám* (of those whose fathers are dead).

[5] "*A corody*":—Víj. explains *nibandha* (corody) as meaning allowances of a certain quantity or number of things such as betel-leaves or betel. The Vír. (l. 175, p. 2) and Śúlapáṇi follow Vij.

According to Aparárka, it means money allowances.

[6] "*Wealth*":—The original word is *dravya*, which is explained by Vij. to be gold, silver, &c. Mádhava understands the term in its literal sense, and would apply it to all moveable as well as immoveable property. It is not quite clear why a word of such general import as *dravya* (matter) should have been here used co-ordinately with its species.

Jímútaváhana (p. 52) understands the term in the sense of *dvipadas* (bipeds), because of the companionship of immoveables and bipeds in a certain text of Naráda, which is quoted in the Mayúkha at p. 34, l. 7.

[7] Vij. and the rest who hold a son's ownership to be co-eval with his birth, put forward this text as indicating the correctness of their theory. Jímútaváhana explains it as intended to secure to the son of a deceased son, a share in the grandfather's property which he otherwise would not have got (see p. 55).

The Subodhiní says that this text applies in the case of a grandson whose father was united with the grandfather, and is dead.

The Vír. (l. 175, p. 2) observes that the equal ownership of the father and the son is specifically declared by this text, to show that in wealth of the kinds herein mentioned, the son is not dependent on the will of the father for partition; and that the father, when effecting a division of his own accord, cannot reserve two shares for himself, as he can in the case of self-acquired property (see above p. 42, l. 16).

The Mayúkha takes the word 'grandfather' as illustrative of the great-grandfather as well (see above p. 33, l. 4).

122. When [after the sons, &c.] have become separated, a son is born of a wife of the same class,[1] he becomes a partaker of a share;[2] or his allotment should be made out of the visible[3] estate, corrected by [the necessary adjustment of] profit or loss[4] [Colebrooke, ch. i., s. vi., 1, 8].

123. The wealth which is given to one by parents, belongs to him alone.[5] When sons divide after the death of the father, the

---

[1] "*A son born of a wife of the same class*":—Vij. adds that in the case of a son born of a wife of a dissimilar class, succession is governed by the author's verse 125 (see below p. 218).

[2] "*Partaker of a share*":—Vij. makes this clear by saying that the son born after partition succeeds to the father's wealth, to the exclusion of the separated brothers. He splits up this verse into two parts, and applies the first hemistich to a son born after partition while his father is alive; and the latter to a son who was conceived but not born at the time of the partition, which took place after the death of the father.

Aparárka agrees with Vij.

Śúlapáṇi, Kamalákara, and Váchaspatimiśra (p. 146) regard the whole text as applicable to the latter of the two cases stated by Vij.

Jím. is opposed to this construction [see pp. 205, 206]. He considers this text applicable to the ancestral property in the hands of separated brothers.

[3] "*Visible estate*":—Vij. explains the term *dṛiśya* (visible) as meaning the wealth received by the brothers at the time of partition.

Vách., following Haláyudha, holds that, owing to the use of the word *vá* (or) the share of the son born after partition is to be made up out of the property in the hands of the separated brothers, both visible and concealed, according as the subsequently born brother is worthy or unworthy respectively (see p. 146).

The Vír. (l. 183, p. 1) refutes this construction, and upholds that of Vij.

Jím., as explained by his commentator Śríkṛishṇa, says that the term 'visible' is used to exclude that portion of the property which may have been already expended (pp. 205 and 206).

[4] "*Profit or loss*":—The words used are *Áya* and *Vyaya*, which are explained to be accretion to the heritage and expenditure on account of the payment of the father's debts respectively.

The Vír. (l. 181, p. 1) limits the expenditure to legitimate charges on the family inheritance, such as the payment of ancestral debts, the initiation of the uninitiated brothers, and the marriages of the unmarried daughters.

The Subodhiní considers that a deduction of the expenditure incurred by a separated brother on account of the maintenance of his family should also be made. This does not seem to be satisfactory.

Vij. adds that the same rule holds with regard to a son conceived before but born after partition to the wife of a brother, in the case of a partition amongst brothers.

[5] "*Belongs to him alone*":—The Vír. amplifies this by saying that any gift within due bounds made by the father to his separated sons out of affection is not to be disputed by the son born after partition; and that the same rule applies in the case of affectionate gifts by the father to his sons before partition. These gifts are to be considered as the peculiar property of sons, and, as such, impartible (l. 221, p. 1).

mother[1] should also receive an equal share[2] [Colebrooke, ch. i., s. vi., 13, and s. vii., 1].

124. Uninitiated[3] sisters should have their ceremonies performed by those brothers who have already been initiated, giving them a quarter[4] of one's own share[5] [Colebrooke, ch. i., s. vii., 3, 5].

---

[1] "*The mother*":—Vij. considers the term *mátá* here used as standing for father's wives generally; so as inferentially to include a step-mother in the list of sharers.

Madana, Mádhava, Aparárka, Śúlapáṇi and Bálambhaṭṭa consider the term *mátá* as illustrative of all those who come in as sharers under a text of Vyása— 'असुतास्तु पितुः पत्न्यः समानांशाः प्रकीर्तिताः। पितामह्यश्च सर्वास्ता मातृतुल्याः प्रकीर्तिताः॥ Translation:— 'The sonless wives of the father are declared equal sharers, and so are all paternal grandmothers declared equal to the mother.' (See above Mayúkha, p. 44, l. 22.)

The Vír. respectfully differs from the above interpretation of Vij., and holds that though the distinction between childless and child-bearing wives is not to be made in the case of a partition by the father during his lifetime, yet when the division takes place after the father's death, it is the *jananí* (child-bearing mother) alone who is entitled to a share, while the barren step-mother obtains maintenance only (see l. 179, pp. 1, 2.) It further states that its exposition as above given is in conformity with the usage of the learned.

Jím. (p. 170) and Kamalákara agree with the Vír. The Mayúkha (see above p. 44, l. 14) seems to disapprove of the wide interpretation put upon the word *mátá*, though he in the end agrees with Vij. in giving to the step-mother a share on the strength of the above-quoted text of Vyása.

[2] "*An equal share*":—The allotment of a share in this case to the mother, says Kamalákara, is an express contradiction of the theory of those who hold the mother entitled to maintenance only at the time of partition among sons. And it is consonant with the practice which generally obtained up to within the last twenty years. It is still the rule in all old families in the country, to reserve a share to the mother at such partitions.

[3] "*Uninitiated*":—The initiation of females now consists in their marriage in accordance with usage, and Manu ch. ii. v. 67. But it appears that at one time *upanayana* as distinct from marriage was allowed to females.

[4] A quarter of the share which she would have got if she had been a son.—Vijñáneśvara.

Vách. (p. 134), mentioning the Ratnákara as approving of his interpretation, holds on the authority of the following text of Vishṇu—"अनूढानां तु कन्यानां स्ववित्तानुरूपेण संस्कारं कुर्यात्." Translation:—"The [marriage] ceremony of the unmarried daughters should be performed according to his wealth;" that the word quarter is here used not in its plain sense, but simply to enjoin the allowance of as much as will suffice for the marriages of sisters.

Śúlapáṇi, the Smṛiti-Chandriká, Bháruchi, a commentator on Manu (Mit. ch. ii. l. 53, p. 1) and Jím (p. 114) agree with Vách.

Vij. (ch. ii. l. 52, p. 2) and the Vír. (l. 179, p. 2) notice this interpretation, and reject it.

The Mayúkha (see above p. 49, l. 4) and Kam. follow Vij.

Aparárka and Medhátithi in his comment on a similar verse of Manu (ch. ix., v. 118), also observe to the same effect.

[5] "*Own share*":—Vij. says the use of the word *anśa* shows that the daughter is a sharer as a matter of right in a partition after the death of the father. The Vír. (l. 180, p. 2) as usual follows Vij. here.

Jím. considers this text as intended only to declare the obligation of brothers to get their sisters married; so that it gives no right to the sisters to enforce a gift of

125. The sons of a Bráhmaṇa [by a Bráhmaṇí, Kshatriyá, Vaiśyá, or Śudrá wife,] get four, three, two, or one shares respectively; those born to a Kshatriya, three shares, two, or one respectively; and those born to a Vaiśya [of a Vaiśya or Śúdra wife,] two shares or one respectively[1] [Colebrooke, ch. i., s. viii., 1].

126. The settled rule is, that co-heirs should again divide,[2] in equal shares,[3] that wealth, which being concealed by one (co-heir) from another is discovered after partition [Colebrooke, ch. i., s. ix., 1].

127. A son, begotten by a sonless man, having permission to that effect, on the wife of another, will be the rightful heir [to the properties] of, and the giver of the funeral cake to, both [the real and the reputed father][4] [Colebrooke, ch. i., s. x., 1].

128. [1] The *Aurasa* son is he who is procreated on the lawfully wedded wife;[5] [2] equal to him is the son of an appointed daughter, or the

---

that share (p. 114). Aparárka is led to the same conclusion by the following Vedic text cited by Baudháyana, viz., तस्मात् स्त्रियो निरिन्द्रिया अदायादाः (Taittiríya *Samhitá, kánda* vi., *adhyáya* v., and *Anuváka* viii., see p. 667, vol. I. Taittiríya Samhitá of the Black Yajur Veda). Sáyana's comment on the text is "तस्मात्लोके स्त्रियः सामर्थ्यरहिता अपत्येषु दायभाजो न भवन्ति." The above text would accordingly be rendered thus:—Therefore women being weak, are unfit for heritage.

This Vedic text is noticed by the Vír. under his heading of *stridhana* (l. 220, p. 1), where he says the general proposition enunciated thereby is limited by the express mention of certain females as sharers. The same reasoning would apply in the present case.

[1] Vij. adds that the rule herein laid down does not apply to land acquired by *pratigraha* (acceptance) [ch. ii., l. 53, pp. 1, 2].

Comp. Manu ch. ix., vv. 151—153. Marriages with women of a dissimilar class have been prohibited in this Kali age (see the Nirṇayasindhu, *parichchheda* iii., first part, l. 62, p. 1, where the following text from Brihat Nárada is cited:—द्विजानामसवर्णासु कन्यासूपयमस्तथा which means 'so also the marriage of a *dvija* (twice-born) with a maiden of a dissimilar class [is prohibited]).' This text of Yájñavalkya has therefore no application now. See Mayúkha above p. 46, l. 17.

[2] "*Divide*":—By the use of the plural verb *vibhajeran* (they should divide), says Vij., it is meant that the detected common property should be divided among all the co-heirs, and not only among those who concealed and those who detected it.

[3] "*Equal shares*":—Vij. says an unequal division is hereby forbidden. The Vír. adds (l. 220, p. 1) that on no account is the co-heir who concealed the effects disabled from getting an equal share. Mayúkha (see above p. 72, l. 16).

[4] Vij. considers this kind of *dvyámushyáyaṇa* son fit for recognition only when the mother was betrothed, but not married. But as this observance, technically called *Niyoga*, is prohibited in the Kali age (see the Nirṇayasindhu *parichchheda* iii., first half l. 62, pp. 1 and 2), any further comment on the text would be out of place.

[5] Vij. says the *aurasa* must be the son of a wife of the same class. Vách. observes to the same effect (p. 149). Bálambhaṭṭa and Śúlapaṇi agreeing with Vij. support this interpretation by the following text of Baudháyaná:—सवर्णायां संस्कृतायां स्वयमुत्पादितमौरसं विद्यात्. Translation:—He who is begotten on the properly wedded wife of an equal class should be known as *aurasa*. But the Vír. (l. 184, p. 2) does not subscribe to this statement of Vij., and points out its inconsistency with Vij.'s inclusion of *Murdhávasikta* among the *aurasa* further on (see ch. ii., l. 57, p. 1).

appointed daughter herself;[1] [3] *Kshetraja* (the son of the wife) is one begotten on a wife by a *Sagotra* (kinsman) of her husband or by another [Colebrooke, c. i., s. xi., 1].

129. [4] One, secretly produced in the house, is declared a son of hidden origin; [5] a damsel's child is one born of an unmarried daughter; he is considered a son of his maternal grandsire[2] [Colebrooke, ch. i., s. xi., 1].

130. [6] A child, begotten on a woman whose [first] marriage has or has not been consummated, is called the son of a *Punarbhú* (a twice-married woman). [7] He, whom his father or mother[3] give (in adoption), is *dattaka* (a son given) [Colebrooke, ch. i., s. xi., 1].

131. [8] A son bought is one sold by them [his parents]; [9] a *kritrima* or self-made son is one adopted by the man himself; [10] one who gives himself is a *Svayandatta* or self-given son; [11] a son produced in the womb (before marriage) is a *Sahoḍhaja* (son of a woman who was pregnant at marriage)[4] [Colebrooke, ch. i., s. xi., 1].

132. [12] He who, having been foresaken by his parents, is taken for adoption, is *Apaviddha* (a deserted son)[5] [Colebrooke ch. i., s. xi., 1].

Of these sons, each, in the absence of the preceding, is a giver of the funeral cake [to], and the inheritor of a share [of the property of the father].[6]

133. This law is propounded by me in regard to sons equal by class.[7] A son begotten on a *dási*[8] by a Śúdra becomes even the par-

---

[1] The word is *putriká-putra*, which is capable of two interpretations, viz., the son of the daughter, and the daughter regarded as a son. Both these meanings are given to the word here, in conformity with the text of Vaśiṣṭha cited in the Mayúkha at p. 49, l. 33. See Mayúkha above p. 49, l. 14.

[2] See Mayúkha above, p. 49, l. 17.

[3] Vij. and Aparárka say that when the husband is abroad, or dead, his previous permission to give in adoption is requisite to make the adoption valid. The Vír. holds that no such express permission is necessary (see l. 188, p. 2). The Dattaka Chandriká (p. 51) is at one with the Vír.; while the Dattaka Mímámsá dissents (see p. 2). Mayúkha, see above p. 49, l. 20.

[4] Mayúkha (see above p. 49, l. 23).

[5] See Mayúkha above p. 49, l. 28.

[6] [As none but the *aurasa* and the adopted sons are allowed in this age (see above p. 50, l. 7), I have not thought it necessary to give full explanations of the remaining ten kinds of sons defined above.]

Vij. (ch. ii. l. 56, p. 1) notices the discrepancy between Yájñavalkya on the one hand, and Manu and Vaśishṭha on the other, the latter dividing the twelve kinds of sons into two classes of six each, and declaring one of those classes as disqualified to inherit. Vij. gets rid of this difference by stating that those texts apply only when the deceased is other than the father, such as a *sapiṇḍa* or a *samánodaka* of the deceased. Mádhava agrees with Vij.

[7] The Mayúkha on the strength of this hemistich says the adopted son should always be one from the same class (see above p. 51, l. 19).

[8] As to what a *Dási* is see the texts cited in the case of *Rahi* v. *Govindá walad Teja*—I. L. R. I. Bom., p. 97.

taker of a share by [the father's] choice. [Colebrooke, ch. i., s. xi., 16 and s. xii., 1].

134. After the death of the father, the brothers should make him a half-sharer. An illegitimate son of a Śúdra, if brotherless, can take the whole, unless there is a son to [any of] the daughters [of the Śúdra][1] [Colebrooke, ch. i., s. xii., 1].

135—136. The wife,[2] daughters,[3] both parents,[4] brothers,[5] and

---

[1] This text is a sequel of the latter hemistich of the last verse.

The last quarter is literally rendered in the above translation. But inasmuch as a daughter precedes her son, Vij. says a Śúdra's son by a *Dásí* is postponed to a daughter as well as a daughter's son. Mádhava and the Vír. (l. 192, p. 2) agree.

Vij. infers from a share being allowed here to the son of a *Dásí* in the case of Śúdra alone, that such a son in the case of the twice-born will under no circumstances be entitled to a share.

[2] It should be premised that Vij., the Vír. (l. 199, p. 2), the Mayúkha (see above p. 76, l. 35), Mádhava, Kamalákara, and in some respects Váchaspatimiśra (p. 152) hold these verses applicable to the succession of a divided, not reunited and sonless male who may be deceased, or degraded, or have entered into the fourth order. Jím (pp. 239, 240), Aparárka and Súlapáni give the texts their plain meaning, and hold that whether the deceased be divided or undivided, his next heir is his widow if he leave no male issue.

The wife should be chaste before she is entitled to a share (see Vij. ch. ii., l. 59, p. 1, and the Mayúkha p. 77, l. 7 above). As the word used is *patní* (a lawfully wedded wife), the Vír. says wives married according to any of the four last forms are excluded by those married according to any of the approved forms (see l. 193, p. 1).

Another question that frequently arises in connection with the succession of the widow is as to who succeed on her death, whether her heirs or the heirs of the husband. The Vír. (l. 194, p. 1) quoting Kátyáyana's text:—अपुत्रा शयनं भर्तुः पालयन्ती गुरौ स्थिता भुञ्जीतामरणात्क्षान्ता दायादा ऊर्ध्वमाप्नुयुः॥ which means "the sonless [widow] preserving the bed of her husband, staying with elders, should enjoy [her husband's property] up to death; afterwards the heirs should get [the property]," and explaining the term *dáyádas* to be the heirs of the husband in an undivided family, holds that succession to a widow's property inherited from her husband takes place in reference to her deceased husband and not to her.

The only restriction on a widow's enjoyment of her husband's property seems to be in respect of gifts to actors, dancers, and the like (Vír. l. 195, p. 1).

Dháreśvara holds that in the case of a widow, the right of succession arises from her use in continuing the line; so that a widow without issue is entitled to maintenance only. This is refuted by Vij., (ch. ii. l. 57, p. 2), the Vír. (l. 196, p. 1), Aparárka, and Mádhava.

As to the question whether subsequent inchastity will operate to divest an estate already vested, the Vír., when speaking of disqualifications for inheritance, says (see l. 221, p. 2) that after an estate is once vested in an individual, no subsequent disability will divest it; and that this rule applies as well to females as to males.

[3] Vij. thus gives the order of succession among daughters, first the maiden, then the unendowed married, and afterwards the endowed married daughter; in accordance with a text of Gautama:—स्त्रीधनं दुहितॄणामप्रत्तानामप्रतिष्ठितानां चेति. Translation:—Stridhana belongs to the unmarried, and to the married, among the latter first to the unendowed and afterwards to the endowed.

Jím.'s order of succession among daughters is first the unmarried, then daughters with sons, then a married daughter who may have issue. Barren and widowed daughters are thus excluded (p. 271).

Dháreśvara, Devasvámin and Devaśata, quoted in the Vír. at l. 204, p. 2, hold that

likewise their sons,[1] *gotrajas*[2] (gentiles); *bandhus*[3] (cognates); a pupil and a fellow student—[135]

---

the mention of the daughter in this text is merely declaratory of her right to succeed, and not indicative of her rank in succession; so that she succeeds in preference to her mother owing to her being ranked among sons. Vij. (ch. ii. l. 59, p. 2) and the Vír. (l. 204, p. 2) refute this view, holding that the daughter or the daughter's son, who is included in the category of sons, is not any daughter and any daughter's son, but only such daughter or such daughter's son has been appointed by an agreement.

After the word *duhitarah* (daughters) in the above text occurs the particles *chaiva* (also), to give some sense to which Vij. introduces here the daughter's son in conformity with a text of Vishnu :—अपुत्रपौत्रसन्ताने दौहित्रा धनमाप्नुयुः । पूर्वेषां तु स्वधाकारे पौत्रा दौहित्रका मताः ॥ Translation :—" The wealth of him who has neither sons nor grandsons, goes to daughter's sons; for the daughter's sons are reckoned as son's sons in regard to the performance of their *śráddhas*." Compare Manu ch. ix., v. 136.

Aparárka, Śúlapáṇi and Váchaspatimiśra do not give the daughter's son a place here.

[4] Vij. places the mother before the father in succession.

Vách. (p. 153) and Kamalákara agree with Vij. Jím. (p. 285), Aparárka and the Mayúkha (see above p. 80, l. 1) differ, and place the father before the mother.

The Vír. notes the approval of the latter view by the Smṛiti-Chandriká, Madanaratna, Kalpataru, Ratnákara and Párijáta (see l. 206 p. 2). It may be noted here that Vishṇu's text, which the Mayúkha relies on for refuting Vij., is quoted by Vách. (see p. 151) as placing the mother before the father. The commentator of Jím., however, notes this reading as adopted by the Ratnákara, a work often quoted by Váchaspatimiśra, and pronounces it to be incorrect (p. 288); so also does the Vír. (l. 206, p. 2).

The Vír. quotes Śríkara's opinion that the parents succeed together, and refutes it (l. 206, p. 1). The Vír., seeing the consensus of authority against the preference given to the mother, and yet unwilling to abandon Vij., strikes a middle course, and says that the father or the mother will have preference according to their individual merits or their service to the deceased son (l. 207, p. 1).

Śúlapáṇi says that the parents precede the brother only if the wealth of the deceased was inherited by him from the father, grandfather, or the like, but that in respect of self-acquired property, the brother sets the parents aside according to the following text of Devala :—ततो दायमपुत्रस्य विभजेरन् सहोदराः । तुल्या दुहितरो वापि म्रियमाणः पितापि वा ॥

Translation :—Afterwards, the heritage of the sonless will be partaken by the uterine brothers. The daughters are also equally entitled; and if the father is alive, he also. See Vách. quoting the Ratnákara to the same effect (p. 155).

[5] Vij. says the uterine brothers come in before half-brothers.

The Mayúkha (see above p. 80) and Aparárka do not hold the half-brothers on a par with uterine brothers; the former relegating them to be on *Sapiṇḍas*, where they share equally with the grandfather, to the class of *Gotraja* [illegible] grandfather.

[1] The above note with regard to brothers applies *mutatis mutandis* to brother's sons.

[2] The *pitámahí* (the father's mother) heads the list of *gotrajas* according to Vij. Vách. (p. 153) would bring her in at the end of *gotrajas*.

The Mayúkha (p. 81, l. 25 above) then brings in the sister, and Bálambhaṭṭa the daughter-in-law after the grandmother.

[3] Aparárka takes by the term *Bandhus* only those who are termed *Átmabandhu*, and excludes the *Pitṛibandhu* and *Mátṛibandhu*. Vij. and the rest consider them as technical *Bandhus*, who succeed in the order mentioned by Baudháyana.

Of these, on failure of the preceding, the next following in order is heir to the estate of one who has departed for heaven, leaving no *putra*.[1] This rule extends to all [males whether belonging or not to the four][2] classes. [136.] [Colebrooke, ch. ii., s. i., 2.]

137. [The heirs] who take the wealth of a *Vánaprastha* (a hermit), of a *Yati* (an ascetic), and a *Brahmachárin* (a student), are in their order,[3] the preceptor, the virtuous pupil, and one who is a supposed brother and belonging to the same order [Colebrooke, c. ii., s. viii., 1].

138. A reunited co-heir[4] [takes the wealth] of a reunited co-heir [and] a uterine brother [that] of a uterine brother. [The reunited brother] shall give up the wealth of the deceased to one born [of his body], or [failing one such] shall retain it. [Colebrooke, ch. ii., s. ix., 1.]

---

Between the *Bandhus* and the pupil, the Vír. (l. 209, p. 2) introduces the mother's brother and the like, holding the term *Bandhus* not to be restricted to the technical *Bandhus*.

[1] The word *putra* in this verse stands for son, son's son, son's son's son (see Vír. l. 198 p. 2 line 7 and Bálambhaṭṭa).

[2] The portion within the brackets is supplied from the Mitákshará and the Subodhini.

[3] Vij., Vách. (p. 156), and Jím. (p. 338) state that the order of the heirs is inverse to the order given in the above text. Madana, on the authority of a text of Vishṇu, quoted in the Mayúkha at p. 84, and Śúlapáṇi apparently are opposed to this view.

The Vír. (l. 210, p. 1) and the Mayúkha (p. 83, l. 36 above), and Kamalákara are neutral, and only notice the conflicting interpretations.

Aparárka has given an entirely different construction which would imply that to any one of those mentioned in the first hemistich dying, those mentioned in the latter succeed, in the order stated therein.

[4] Vij. defines a reunited co-heir to be one who having been separated is again united; and in virtue of a text of Bṛihaspati holds this reunion to be possible only in the case of a father, brother or a father's brother. The text is as follows:—विभक्तो यः पुनः पित्रा भ्रात्रा वैकत्र संस्थितः। पितृव्येणाथवा प्रीत्या स तत्संसृष्ट उच्यते ॥. Translation:—He who being once separated, dwells again through affection with his father, brother, or paternal uncle, is said to be reunited with him. (See above p. 84, l. 24.)

Jím. (p. 343), Aparárka, and Śúlapáṇi lay down the law to the same effect.

Váchaspatimiśra (p. 157), quoting this opinion as that of the Prakása, refutes it, holding that reunion is possible with any one from whom division is possible.

The Mayúkha (p. 84, l. 31 above), Kamalákara, Mádhava and the Vír. (l. 169, [illegible] Vách.

[illegible] p. 1) agree with [illegible] and Vách. (p. 157) do not consider this text as an exception Jím. (p. 313) and Aparárka [illegible] the Mayúkha (p. 85, l. 36), the Vír. (l. 210, to vv. 135, 136, as Vij. (ch. ii. l. 61, p. 1), [illegible] p. 2), Kam. and Mádhav do: holding that this applies in the case of the brother's succession. The result of this difference is that according to Jím. and Aparárka the wife, the daughter, and the father are not excluded by even a reunited brother; while Vij. and the rest would give preference to a brother over the widow in a reunited family as in an undivided one.

The Mayúkha (p. 86, l. 11 above) differs from Vij. only in considering that this text does not refer to a sonless deceased as vv. 135 and 136 do. Its object in so doing is to provide for the case where some sons are reunited and others are not.

139. One born of a different mother, if reunited, may take the wealth; but one born of a different mother and not reunited [cannot take]; but a uterine brother, even if not reunited, should obtain the wealth, and one born of a different mother, even if reunited, shall not take alone[1] [Colebrooke, ch. ii., s. ix., 7].

140. An impotent person, an outcaste and his issue, one lame, a mad man, an idiot, a blind man, and [a person] afflicted with an incurable disease are [persons] not entitled to a share; and are to be maintained[2] [Colebrooke, ch. ii., s. x., 1].

141. But their blameless sons, whether legitimate, or *kshetraja*[3] (the offspring by a kinsman) are entitled to inherit. Their daughters should be maintained until they are provided with husbands [Colebrooke, ch. ii., s. x., 9, 12].

142. Their childless wives conducting themselves aright, should also be supported; but if they are unchaste, they should be expelled, and similarly those who are perverse[4] [Colebrooke ch. ii., s. x., 14].

143. What was given [to a woman] by the father, the mother, the husband, or a brother,[5] or received [by her] at the nuptial fire, or

---

[1] Vij. says that the relationship of a uterine brother and reunion are equally potent grounds to support the claim to succession in the case of a reunited deceased.

Śúlapáṇi notices another reading in the second quarter, which unlike Vij. would give preference to a unre-united uterine brother over even a re-united half-brother. The Vír. notices this reading with disapproval (l. 212, p. 2).

For the interpretation of the Mayúkha see above, p. 87, l. 17.

[2] Vij. (ch. ii. l. 61, p. 2) adds to the list given here one who has entered into the third or fourth order, an enemy of his father, one who has committed a secondary sin, a deaf, or a dumb person, and one with a defective limb.

He further says (ch. ii. l. 62, p. 1) that the above disabilities operate as disqualifications, only if they exist prior to the division. If one so excluded should happen to be cured of the defects after partition, he would be entitled to his proper share in the same manner as a son born after partition.

The Vír. concurs in this view (l. 221, p. 2).

Śúlapáṇi explains the term *jaḍa* to be one who is indifferent to religious observances; and *andha* (blind) to be one born blind. For Nílakaṇṭha's view, see above p. 99, l. 18.

[3] Vij. says the *aurasa* and *kshetraja* sons are specifically mentioned to exclude the other kinds of sons.

As to the opinion of the Mayúkha, see above p. 102, lines 4 to 15.

[4] Vij. draws a distinction between an unchaste and a refractory woman, both of whom are to be banished from the house; and he adds that the former is further to be denied maintenance; not so the latter. For the Mayúkha, see above p. 102, l. 9.

[5] Vij. considers this enumeration not as exhaustive but only as illustrative. Aparárka, Jím. (p. 123), Mádhava, Mayúkha (see above p. 91, l. 47) and the Vír. (l. 214, p. 1) agree.

presented on her supersession (*Adhyávahanika*), and the like[1] is denominated woman's property [Colebrooke, ch. ii., s. xi., 1].

144. That which is given [to the bride] by her *bandhus*[2] (kinsman), *Śulka* (the money taken as price by the parents of the bride), *anvádheyaka* (that which is conferred on the bride by the family of the bridegroom after the marriage ceremony),—these her kinsmen (*bándhus*)[3] take if she die without issue [Colebrooke, ch. ii., s. xi, 6, 8].

145. The property of a childless woman married in the Bráhma or any other [of the four approved forms of] marriage[4] goes to her husband; in the remaining [four forms of marriage], it goes to her parents.[5] But if she leave issue,[6] it will go to her daughters[7] [Colebrooke, ch. ii., s. ii., 10].

---

[1] Vij. (ch. ii l. 62, p. 1) says that owing to the use of the word *ádya* (the like) here, the word *stridhana* is here used in its literal sense of 'the wealth of a woman'; so that wealth, whether inherited or obtained in any other legitimate manner, is *stridhana*. Aparárka, Mádhava, Kamalákara, and the Vír (l. 214, p. 2) are of the same opinion.

The Mayúkha (p. 97, l. 11 above) differs, holding that property gained by a woman from the stated individuals only, and in the specified manner, is *stridhana*, which is thus used in a technical sense.

Colebrooke renders the word *ádya* into "any other [separate] acquisition," for which there seems to be no authority; indeed, her separate acquisition in some instances, *i.e.* property gained by exercising mechanical arts, is expressly declared to be subject to the husband's power (see above p. 93, l. 20).

[2] Vij. understands by the term *Bandhu* here the technical *Bandhus* (ch. ii. l. 62, p. 2).

Aparárka understands it in the general sense of a relation, such as the father's brother, &c.

Jím. (p. 148) says it stands for the parents.

[3] Vij. says that the *Bándhavas* here noted are those that are mentioned in the next verse. Aparárka coincides with Vij.

Jím. (p. 148) takes the word to be synonymous with brothers. Kamalákara agrees with Jím.

See Mayúkha above p. 97, l. 31.

[4] The Vír. (l. 219, p. 1) interprets the words *Bráhmádishu* as an *atadgunasamvijñána Bahuvrihi*, so as to make the succession mentioned in this hemistich applicable to five forms of marriage, including the Gándharva.—This is done in conformity with a text of Manu (ch ix., v. 196):—ब्राह्मदैवार्षगान्धर्वप्राजापत्येषु यद्धनम्। अप्रजायामतीतायां भर्तुरेव तदिष्यते॥ Jím. (p. 145) agrees with this, but applies this text to wealth got by a woman at the time of marriage on the authority of Viśvarupa. Kamalákara notices the above text of Manu, and explains the difference by stating that a gift by the father alone at the *Gándharva* marriage follows the rule relating to the approved forms. Aparárka holding Manu and Yáj. as here irreconcileable, makes the succession in the case of the approved forms optionally applicable to the *Gándharva* marriage.

[5] "*Her parents*":—The word is *pitrigámi*, and all agree in holding that the mother has precedence over the father in this case. See Mayúkha above p 97, l. 34.

[6] "*Issue*":—This refers to marriages of all forms alike. So say Vij. and Aparárka.

[7] "*Daughters*":—The word is *duhitrinám*, which Vij. construes into daughter's daughters; for, says he, the case of daughters is already provided for by v. 117.

Jím. (p. 139.) is opposed to this interpretation, as he considers that it is the sons who succeed in the absence of the daughters, and not the daughters' progeny.

Aparárka agrees with Jím., while the Vír. sides with Vij. (l. 219, p. 2).

146. If a man, after having given his daughter, takes her [back],[1] he should be punished and compelled to pay the expenses, together with interest. If she die [after betrothal], the gifts may be taken [back] by the bridegroom, after the expenses on both sides have been deducted [Colebrooke, ch. ii., s. xi., 26, 29].

147. A husband[2] is not liable, unless he be willing, to make good the property of his wife taken [by him] in a famine or for the performance of religious duties, or during illness, or while under restraint[3] [Colebrooke, ch. ii., s. xi, 31].

148. To a superseded wife, [the husband] should give a sum equal [to the expenses of the marriage][4] by which she has been superseded, provided no *strídhan* (woman's property) had been bestowed on her; but if [any has been] assigned, *ardham*[5] (half) [only] should be allotted [Colebrooke, ch. ii., s. xi., 34].

149. On denial of partition, the fact of the division may be established by [the testimony of] kinsmen,[6] relatives,[7] witnesses, documents, and houses or fields separately held [Colebrooke, ch. ii., s. xii., 1].

## BOUNDARY DISPUTES.

150—151. In a dispute about the boundary of a field, all the neighbours, old men, and others, all the herdsmen, neighbouring cultivators, and foresters [150],

---

[1] Vij. says this text refers to a maiden betrothed. He who having agreed to give his daughter in marriage recedes from that promise, is to be punished only if he so receded wantonly without any justifying cause (see Mayúkha above p. 99, l. 4).

[2] "*A husband*":—Vij. says that any one other than a husband appropriating a woman's property under any circumstances shall be compelled to restore it. See Mayúkha above p. 94, l. 35.

[3] "*Under restraint*":—The word is *sampratirodhake*, which Vij., the Vír (l. 216, p. 1) and Aparárka join in explaining as restraint put upon a person by the king Śúlapáṇi considers the restraint to be one put upon a person by his creditor. Vách. (p. 141) construes the word as an adjective qualifying *vyadhau* (in disease), so as to mean a disease that confines a man to his house or bed.

[4] Vij. says the superseded wife should obtain as much as is bestowed on the second wife.

[5] Vij. takes the word *ardham* here not as meaning exactly one half, but as a fraction generally.

See Mayúkha above p. 92, l. 26.

[6] "*Kinsmen*":—The word is *jñáti*, which means, according to Jím. (p. 359), the *sapiṇḍas*, and according to Bálambhaṭṭa an unconnected person of the same caste.

[7] "*Relatives*":—The word is *Bandhu*. Vij. says it means the technical *Bandhus*. According to Bálambhaṭṭa it means the brothers in addition to the other *Bandhus*. Jím. (p. 359) considers that the order of eligible witnesses is here indicated. See Mayúkha p. 73, l. 10.

Should determine the boundary by observing the following marks, such as rising of the ground, charcoals, corn-husks, trees, water embankments, ant-hills, slopes, bones or heaps of stones.[1] [151].

152. *Sámantas* (men of the neighbouring villages), or of that in which the disputed ground is situated, equal in number [from each village], being either four, eight, or ten, having put on a garland of red flowers and a red dress, and taking some earth [on their heads] shall point out the true boundary.[2]

153. If they tell lies, the king ought to punish each of them with the middling penalty. In default of persons knowing, or of the aforesaid marks [of a boundary], the king should determine the boundary.[3]

154. It should be known that this procedure will apply, in the case of a garden, a warehouse,[4] a village, a watering place, a pleasure garden, a house, a gutter [between two houses for] carrying rain-water, and the like.

155. For destroying boundary marks [of lands], for encroaching beyond the boundaries of lands, and for usurping lands, the fine is the lowest, the highest, and the middling [respectively].[5]

156. An embankment producing benefit should not be prohibited [by the owner of the field] where the inconvenience is slight, and [similarly] a well which occupies but little space, and supplies abundance of water.[6]

157. If a man, without giving notice to the owner, set up an embankment round his [the owner's] field, the enjoyment of its profits is [the right] of the owner, or on failure of him, that of the king.[7]

158. He who [having undertaken to cultivate a field] does not do so himself, or through another, after having broken it by a ploughshare, should be compelled to pay [an equivalent of] the produce [obtainable] from the cultivation of the land; and the land should be allowed to be cultivated by another.[8]

---

[1] Compare Manu ch. viii., vv. 246—252.

[2] See above p. 134, l. 16, Manu ch. viii., v. 256, the Vír. l. 140, p. 1.

[3] See Mayúkha above p. 135, l. 12; Vír. l. 142, p. 2.

[4] The word is *áyatanam*, which Vij. interprets as a storing place for straw, &c. and Aparárka as a temple.

[5] See Mayúkha above p. 136, l. 20.

[6] See Mayúkha above p. 137, l. 1.

[7] See Mayúkha above p. 136, l. 32.

[8] Manu ch. viii., vv. 245—266, corresponds with the present heading of boundary disputes.

## THE MASTER AND THE HERDSMAN.

159. [The owner of] a she-buffalo doing damage to corn shall be fined eight *máshas*[1] [for each animal]; that of a cow, half of that; and that of a goat or sheep, a half of that [again].

160. [Again] for cattle eating and lying down in the field, the fine is double the [one] mentioned [above]. The fine is equal in the case of lands where grass or fuel is stored; and the fine for an ass or a camel is the same as that for a she-buffalo.[2]

161. As much corn as may be destroyed, shall be paid to the owner of the field; the herdsman shall be scourged, but the owner of the cattle incurs the fine already declared.[3]

162. A herdsman is not guilty of an offence [if the cattle under his care], without any intention [on his part], [browse the crop standing] in a field [situated] by the side of a road, or a village pasture ground. [But] if the cattle be wilfully allowed to trespass, he should be punished as a thief.[4]

163. A seed-bull, beasts let loose [with a brand, in honour of the dead], beasts just delivered, straggling beasts and others, beasts which have no herdsmen, beasts distressed by [the acts of] God or king—all these should be released.

164. In the evening, a herdsman should return the beasts [to their respective owners] in the same condition in which they were entrusted to him]. A paid [herdsman] should be compelled to make good the beasts lost or killed by his negligence.

165. When injury is done [to animals] by the fault of the herdsman, the fine ordained for him is twelve *paṇas* and a half, and he should restore the thing [*i. e.* the animal] to the owner.[5]

166. [A piece of land can be set apart as a] pasture-ground, either by the will of the villagers or by the authority of the king. A twice-born can take grass, fuel, or flowers from any place as if they were his own.

167. A space should be left between one village and another village [measuring] one hundred *Dhanush* [or 400 cubits] in extent; measuring two hundred *Dhanush* around a country town, and four hundred *Dhanush* about a city.[6]

---

[1] Vij. says the *másha* here is a twentieth part of a copper *paṇa*. The rule here laid down applies in the case of animals doing damage without the owner's knowledge. The fine is heavier in the case of damage with knowledge (see Mayúkha p. 133, l. 19).

[2] The fine here mentioned is for each trespassing animal: Vij. See above p. 133, l. 22.

[3] See above p. 133, l. 25.

[4] This refers to an unfenced field or pasture.

[5] See above p. 132, l. 25.

[6] See Mayúkha p. 133, l. 8. Compare with this section Manu ch. viii., vv. 229—244.

## SALE WITHOUT OWNERSHIP.

168. A man can obtain [the possession of] his property sold by another. The buyer would be blameworthy if he bought it secretly. [He would be treated as a thief] if he bought it from a suspicious character, or in secret, or for an inadequate price, or at an unusual hour.

169. Having come by a thing lost or stolen, the owner should get the purchaser apprehended. In cases of inconvenience, owing to the distance [of officers] or [the want] of time, he shall apprehend [the purchaser] himself, and make him over [to the proper authorities].[1]

170. When the seller [of a stolen thing] is pointed out, [the buyer] should be discharged. The owner will obtain his thing, the king his fine, and the buyer his price, from him who sold it.

171. Proof of a thing lost [or stolen] must be made [by the owner] by evidence of title or by possession; otherwise on failure of proof, he should pay the king a fine equal to a fifth part.[2]

172. He, who receives from the hand of another a thing stolen or lost, should be fined ninety-six *paṇas*, unless he has previously informed the king of it.

173. The owner of a thing lost or stolen which had been found by customs officers or watchmen, shall take it [if claimed] within one year, after which the king shall retain it.[3]

174. The owner of stray animals must pay four *paṇas*, if the animal be of a species with single hoofs; five *paṇas* for human beings, two for every buffalo, camel, cow, or animal with cloven hoofs, but only a fourth for every goat or sheep.[4]

---

## RESUMPTION OF GIFT.

175. Without causing detriment to the family property [everything] may be given except a wife and son. When a man has descendants

---

[1] Vij. notices and rejects another interpretation of this verse by Śrîkara; which says a purchaser being made aware that his purchase was the lost or stolen property of another, should get the vendor apprehended. If that is impossible owing to the vendors having fled to a distant country, or having been dead, he should make over the purchased commodity to the owner.

Aparârka and Śûlapâṇi and the Vîr. (l. 116, p. 1) adopt Vij.'s interpretation.

[2] Of the value of the thing lost. See above p. 118, l. 20.

[3] See above p. 119, l. 30.

[4] See above p. 120, l. 19. Compare Manu ch viii., vv. 197—202, corresponding with this section.

he should not give away the whole of his property; nor [should he give away] a thing to one different from him to whom the promise was made.[1]

176. An acceptance should be [made] openly; particularly that of immoveable property. That which is promised should be given without fail.[2] And that which is given should not be resumed.

## RESCISSION OF PURCHASE.

177. The time allowed [to the vendee] for the examination of seeds, iron, beasts of burden, jewels, females, and milch beasts, is ten days, one day, five days, seven days, one month, three days, and a fortnight respectively.

178. Gold is not reduced by fire; silver loses two *palas* in the hundred; tin and lead eight; copper, five; iron, ten.[3]

179. In the case of woollen and cotton yarns, the increase is ten *palas* in the hundred; [so] in [cloth of] middling quality five, and in [cloth of] fine quality three [palas].[4]

180. A reduction of a thirtieth part is allowed in embroidered cloths and cloths made of hair. There is neither an increase nor a decrease in the case of silken cloths or barks.[5]

181. Where [a thing has] deteriorated, [the artizan] should certainly be compelled to give [compensation] which [men], versed [in the nature] of those objects, may declare [proper] upon ascertaining the [nature of] the place and the time, the use [of the disputed object] and [its] durability or non-durability.[6]

## BREACH OF A SERVICE-CONTRACT.

182. One enslaved by force, and also one sold by robbers, are released [from slavery].[7] [A slave] who has saved the life of his master [deserves to be liberated]. [A slave can regain his liberty] by paying the expenses of maintenance or by paying him a ransom.[8]

---

[1] See Mayúkha above p. 122, l. 22.

[2] Vij. adds, if the recipient should in the meantime not have been degraded. Compare the corresponding verses of Manu ch. viii., vv. 212—214.

[3] See above p. 117, l. 19. [4] See above p. 117, l. 24.

[5] See above p. 117, l. 28.

[6] See the corresponding verses in Manu ch. viii., vv. 222, 223.

[7] See above p. 127, l. 7.

[8] Vij. says this applies in the case of a slave purchased, and there the amount of the ransom is the price originally paid with interest.

183. He who having become a *Sannyásin* (an ascetic) falls from that order, shall become the slave of the king for life.[1] Slavery is [lawful when the slave] is of an inferior class; not when he is of a higher class.

184. An apprentice, even when he has finished his mechanical education, should remain in his master's house for the stipulated period, receiving his maintenance from the master, and giving him the proceeds of his skilled labour.[2]

## TRANSGRESSION OF A COMPACT.

185. A king, having built a house in his capital, and having lodged there an assemblage of Bráhmaṇas versed in the three Vedas, and furnished with means of livelihood, should say to them—'Protect virtue.'

186. Customary law, as well as usages established by kings, should be carefully upheld, if not inconsistent with [the revealed] law.[3]

187. Him who embezzles the property of the *Gaṇa* (a guild or a body), and him who violates their [established] usage, the king should banish from the realm after confiscating all his effects.[4]

188. The command of such members of a community as give out orders for the benefit of the [whole] body, should be obeyed by all. A member of that community who acts contrary [to the aforesaid command] should be compelled to pay the lowest fine.

189. A king should dismiss those who come to him for public business when they have done their work, after having worshipped them with gifts and honours.

190. What one obtains when sent on the business of a community, he should make over [to the community]. If he does not give it of his own accord, he should be compelled to pay it eleven-fold.

191. Men, versed in law, irreproachable, free from avarice, should be appointed to consider the business of a public body. What they say ought to be executed, when they issue commands for the benefit of the body.

192. The same law prevails in the case of *Śreṇis*, *Naigamas*, *Pákhaṇdins* and *Gaṇas*. A king should preserve their peculiarities and conserve their practices.[5]

---

[1] See Mayúkha above p. 126, l. 76.

[2] See the corresponding verses of Manu. ch. viii., vv. 410—420.

[3] See Mayúkha above p. 130, l. 14.

[4] See Mayúkha above p. 130, l. 27. Vij. and Aparárka say this punishment is laid down when the offence of misappropriation is of the most aggravated type. For offences of a lesser degree see Manu ch. viii., vv. 219, 220.

[5] See the corresponding verses in Manu ch. viii., vv. 218—221.

## NON-PAYMENT OF WAGES.

193. He, who, having received his wages, abandons the [undertaken] work, shall pay twice as much [to his master]; when no [wages are] received, [he] shall be made to pay [equal to the stipulated wages]. Servants should take care of the implements [of their work].

194. He, who, without settling the wages, employs another to work, should be compelled by the king to pay him a tenth part of the [profit arising from] trade, beasts, or grain.[1]

195. He, who, by disregarding the time or the place, or in any other way, brings inadequate profits [to the master, shall be remunerated] according to the pleasure of the master. When more [than a fair return to the master is] secured, something over and above [the stipulated wages] should be given.

196. When [an undertaken work] cannot be accomplished by both,[2] the wages shall be in proportion to the work done. Where it is accomplished, the stipulated [amount shall be paid].[3]

197. A utensil[4] destroyed by [a servant] bearing it, shall be made good, save in cases of [destruction by an act] of God or the king. He who raises obstacles at the auspicious moment of starting shall forfeit twice the amount of his wages.[5]

198. If he raises obstacles after setting out, [he shall forfeit] the seventh part of his wages; and the fourth part if he desert on the way.[6] [One abandoning his master] when only half way, shall be made to repay the whole [wages]; so also [that master] who causes [the servant] to give up work.[7]

---

## GAMBLING AND PRIZE-FIGHTING.

199. The keeper of a gambling-house shall take from a gambler five per cent. when the wager is a hundred [*paṇas* or upwards], and ten per cent. in other cases.

200. Being well protected [by the king], he shall give the promised share [of his gains] to the king; he shall recover the wager, and pay it to the winner, [and] being ever patient, [shall speak] the truth.[8]

---

[1] See Mayúkha above p. 128, l. 1.

[2] The word उभयोः (of both) is used as illustrative of two or more than two : Vij.

[3] This text applies where work has been undertaken by contract. Aparárka adds that it is immaterial to inquire how many labourers were employed.

[4] The word used is भाण्ड, which is comprehensive, and will apply to a utensil as well as a weapon or an implement.

[5] See Mayúkha above p. 128, l. 33. [6] See Mayúkha above p. 129, l. 1.

[7] Compare the corresponding verses in Manu ch. viii., vv. 214—218.

[8] Vij. says veracity is here enjoined to inspire confidence into the minds of gamesters.

201. [Payment of] that which has been won publicly in an assembly of gamesters in the presence of the master of a gaming house, and when the king's share has been paid, shall be enforced, but not otherwise.[1]

202. The superintendents and witnesses in [gaming] transactions [should be] gamblers themselves. A man who plays with false dice, or by deceit, shall be branded and banished by the king.[2]

203. Gaming should be allowed under one supervision, as being a means[3] of detecting thieves.

This very law should be understood to apply in the case of *Samáh-*
10 *vaya* [prize-fighting].[4]

## ABUSE.

204. He, who, by true, untrue, or ironical [statements] ridicules persons wanting a limb, or an organ of sense, and the diseased, shall be fined twelve and a half *paṇas*.[5]

205. Any one abusing another thus—'I shall have criminal connexion with thy sister or thy mother,' shall be made by the king to pay a fine of twenty-five [*paṇas*].[6]

206. [The fine for abuse] of inferior[7] [people] is half [of the next preceding fine, viz., 25 *paṇas*]; and for abuse of others' wives or supe-
20 riors, two-fold.[8] [In all other cases, the amount of] fine is to be determined according to the superior or inferior *varṇa* (class) or *játi* (caste)[9] [of the abuser and the abused].

207. In cases of the abuse of one of a superior class, the fine is two-fold and three-fold [respectively], and of one of a lower class it is to be reduced in the ratio of one-half [according to the class of the abused].[10]

---

[1] See above p. 153, l. 30. [2] See above p. 154, l. 4.

[3] 'Because,' says Vij., 'gamesters are as a rule drawn from the class of thieves.'

[4] See above p. 154, l. 13. See the corresponding verses in Manu ch. ix., vv. 220—228.

30 [5] See above p. 138, l. 34. [6] See above p. 138, l. 26.

[7] In character or qualifications. [8] That is, fifty *paṇas*.

[9] Vij. and Śúlapáṇi say that *varṇa* means the four classes, such as Bráhmaṇas, &c.; and *játi* means a caste such as a *múrdhá vasikta*, &c.

[10] Vij., interpreting this verse (which by itself is obscure) by the light of Manu's texts, says the first hemistich refers only to the case of a Bráhmaṇa abused by a Kshatriya or Vaiśya. The fine in the case of a Kshatriya being abused by a Vaiśya or a Śúdra, or in the case of a Vaiśya by a Śúdra, is to be determined by analogy. The substance of the whole comment on this verse is:—A Kshatriya, a Vaiśya, or a Śúdra abusing a Bráhmaṇa will be punished with a fine of 100 and 150 paṇas, and
40 beating or mutilation respectively. A Vaiśya or a Śúdra abusing a Kshatriya is fined 100 and 150 *paṇas* respectively. A Śúdra abusing a Vaiśya is fined 100 *paṇas*. A Bráhmaṇa abusing a Kshatriya, a Vaiśya or a Śúdra shall be fined 50, 25, and $12\frac{1}{2}$ *paṇas* respectively. A Kshatriya abusing a Vaiśya or a Śúdra is fined 50 and 25 *paṇas* respectively. Lastly, a Vaiśya abusing a Śúdra is fined 50 *paṇas*.

208. Let a fine to the amount of a hundred *paṇas* be inflicted for abuse, threatening injury to the arm, neck, eyes, or thigh; and the half of it for like abuse to the foot, nose, ears, the hand, or the like.[1]

209. If this [imprecatory threat] were uttered by a feeble person, he should be fined ten *paṇas*, but if by one able [to carry the threat into execution], he should be also required to give security for the safety of the person [threatened].[2]

210. In the case of abuse [involving] degradation from caste, the fine is [that for a] middle *sáhasa* (offence); [in the case of abuse involving an accusation of] a secondary sin, [the abuser] shall be made to pay the fine for the lowest *sáhasa*.

211. The highest fine shall be for him who abuses a Bráhmaṇa learned in the three Vedás, the king, or the gods.[3] [In the case of abuse] of the caste or the *Púga* (community), [the fine] is [that for] the middle *sáhasa*; and [in the case of that] of the village or the district, [the fine] is [that for] the lowest *sáhasa*.[4]

## ASSAULT.

212. In the case of a beating to which there are no witnesses, the determination should be made by marks, circumstantial inferences,[5] popular report, and the like[6]; lest the marks should be [entirely] counterfeited.

213. A fine of ten *paṇas* is recorded [as] the punishment for throwing ashes, mud, or dust on a person; double that sum, for throwing at him filth, the heel or the spittle.[7]

214. This [holds, if an offence be committed] against one of the same [class]. But [if the offence be committed] against the wife of another or against one of a higher class, [the fine shall be] doubled; if against one of an inferior class, half the fine; if committed through aberration of the intellect, drunkenness, or the like, no fine shall be inflicted.[8]

215. The limb with which any one not himself a Bráhmaṇa, gives pain to a Bráhmaṇa, shall be cut off. The lowest amercement is laid down, [if the limb or weapon is only] raised: and half of it, if the Bráhmaṇa is touched with the weapons.[9]

---

[1] See above p. 138, l. 20.
[2] See above p. 138, l. 24.
[3] See above p. 138, l. 29.
[4] See the corresponding verses in Manu ch. viii., vv. 266–278.
[5] About the motive, &c.
[6] Vij. includes an ordeal.
[7] See above p. 139, l. 15.
[8] See above p. 139, l. 18.
[9] See above p. 140, l. 20.

216. For holding up [threateningly] a hand or a foot, the punishment shall be ten and twenty [*paṇas*] [respectively]. The middle scale of punishment is declared for all classes for mutual pointing of weapons.[1]

217. The [fine] of ten *paṇas* [shall be inflicted] for violent pulling of the foot, the hair, the clothes, or the hand [of another]; a hundred, for violently pulling a man caused to be tied in his clothes, and trampling him under foot.[2]

218. The man who causes pain [to another] with a stick or the like, without shedding blood, shall be fined thirty-two *paṇas*; double that sum, if blood be shed.[3]

219. The middle fine [shall be imposed] for breaking a hand, a foot, or a tooth; for tearing the ears or the nose; for laying open a sore, and likewise for beating one till he is almost dead.[4]

220. In the case of restraint in respect of motion, feeding or speaking; and of injury to the eye and the like, and fracture of the neck, the arm, or the thigh, [the fine is that for] the middle *sáhasa*.

221. When several assault a single person, their fine [shall be] double [the fines] already mentioned.[5] That which was taken during the scuffle shall be restored; and a fine [of] twice [the amount shall be paid in addition].

222. He who [in an assault] inflicts a [bodily] injury, shall pay the expenses of cure, as well as the fine that is laid down for the assault [committed].

223. He who strikes, perforates, breaks or demolishes a wall shall be made to pay five, ten, twenty *paṇas*, and [all these together[6] with] the expenses [of reconstruction respectively].

224. One throwing into the house [of another] a thing [likely to produce] bodily injury[7] should be made to pay sixteen *paṇas*; and one similarly [throwing] a thing dangerous to life[8] is fined [in the] middle amercement.

225. For giving pain, drawing blood, cutting off the branches [as horns, &c.] or a limb, the fine shall be from two *paṇas* upwards, in the case of minor quadrupeds.[9]

---

[1] See above p. 140, l. 5.
[2] See above p. 140, l. 9.
[3] See above p. 140, l. 12.
[4] See above p. 140, l. 16.
[5] This fine will be for each assaulter separately, see Vír. l. 146, p. 2.
[6] Aparárka says in the case of the demolition of a wall there is no punishment, b[illegible] only compensation to the owner. Śúlapaṇi lays down that in addition to the c[illegible] pensation there is to be a fine of 20 *paṇas*. The Vír. (l. 142, p. 2) agrees with V[illegible] making the fine to be 35 *paṇas*.
[7] Such as thorns, &c.
[8] Such as poison, a venomous sna[illegible]
[9] See above p. 141, l. 3.

226. For cutting off their organs of generation, and causing death, the middle amercement shall be paid [in addition to] their value. A double punishment shall be imposed in the case of [similar injury to] superior animals.[1]

227. In the case of injury to the branches, or the trunk, or the uprooting of trees which throw down branches,[2] or which are the means of livelihood,[3] the fine is twenty, and twofold [of the preceding fine for the offence next in order].[4]

228. In the case of [injury] to trees growing in a sacrificial place, a cemetery, a boundary, a sacred place, or a temple, and trees well known,[5] the fine is twofold.

229. In the case of injury in the aforementioned parts to *gulma*, *guchchha*, *kshupa*, *latá* (a creeper), *pratána* (a creeper without offshoots or knots), *oshadhi* (small plants bearing fruit like paddy), and *vírudh* (plants which grow again after being cut), the fine is half of that before mentioned.[6]

## SÁHASA (HEINOUS OFFENCES).

230. When common [as well as another's] property is forcibly carried away, that [act] is called *sáhasa* (a heinous offence). The fine [in such a case] is [ordinarily] twice the value [of the thing taken away], but fourfold when the offence is] denied.[7]

231. He who causes the commission of a *sáhasa* (a heinous offence), shall be made to pay a double fine; and he who does the same by saying—'I will give [such a reward]' shall be made to pay quadruple the amount.[8]

232—233. For him who abuses or disobeys the venerable, who beats his brother's wife, who does not give what is promised, who breaks open a house sealed, [232]

Or who does an injury to his neighbour, or his blood relations, or the like,[9] the fine is fifty *paṇas*. This is the invariable rule. [233.]

---

[1] See above p. 141, l. 6.

[2] Such as the Bunyan tree.

[3] Such as mango trees and the like.

[4] That is to say the fine is twenty, forty, and eighty respectively.

[5] Such as Ficus Indica and Ficus Religiosa, which are worshipped by Hind

[6] For the distinctions between the various kinds of plants here mentio ch. ii., l. 81, p. 1; and Vír. l. 148, p. 1.

See the corresponding verses in Manu ch. viii., vv. 278—301.

[7] Comp. Manu ch. viii., vv. 332 and 344—347.

[8] See above

[9] Vij. includes the co-villagers and fellow-countrymen.

234—237. He who wantonly[1] consorts with a widow, who does not run upon [hearing] a halloo [for succour], who needlessly halloos [for aid], he who being a Chaṇḍála, touches men of the higher [classes], [234];

Who feeds a Śúdra ascetic[2] [of the fourth order] on religious or obsequial [occasions], who pronounces an improper oath, who [although] disqualified performs religious rites; [235]

Who destroys the virility of bullocks[3] or inferior quadrupeds,[4] who conceals common [property], who destroys the fœtus of a female slave, [236]

[Or] whoever being the father, and the son, the sister and the brother, the husband and the wife, and the preceptor and the pupil abandon each other when not degraded shall be fined a hundred [*paṇas*]. [237.]

238. A washerman wearing the garments of another shall be fined three *paṇas*; and in cases of a sale, hiring out, pledge, or a loan on request, ten *paṇas*.[5]

239. For witnesses in a feud between the father and the son, the fine is three *paṇas*; [and] for him who engages himself therein,[6] the fine is eight-fold [*i.e.* 24 *paṇas*].[7]

240. He who issues false balances, false royal mandates, false measures, and false coin, as well as he who adopts them [knowing them to be false,], shall be [liable] to the highest fine.

241. That a payer of coin who pronounces a genuine [coin] false, and a false one genuine, shall be made to pay the highest fine.

242. A quack, falsely [setting himself up as a physician] treats the lower animals, [ordinary] people, or officers of the king, shall be amerced in the lowest, the middling, and the highest fine [respectively].[8]

---

[1] By the use of the word *wantonly*, the cases where such intercourse is sanctioned by the practice of *niyoga* are excluded.

[2] Vij. reads शूद्रःप्रव्रजितानां, so as to mean 'a Śúdra feeds an ascetic,' &c.; but Aparárka adopts the interpretation given above, which agrees with the text in most of the copies consulted.

[3] Vij. here notices a reading of वृक्ष (tree) instead of वृष (a bull), and says that in the case of a tree, the injection of assafœtida and such substances brings about the barrenness of that tree. This reading is adopted by Śúlapáṇi.

[4] Such as goats.

[5] See above p. 117, l. 13.

[6] *taré-cha*" &c:—As by being a surety or fomenting the quarrel: Vij. Śeśvara adds that those who similarly dabble into and encourage disputes husband and the wife, and the master and the pupil, should be similarly

adds that just as the punishment varies according to the rank of should there be a similar distinction among the lower animals eir value or the rank of their master.

243. He who restrains one not deserving to be restrained, or lets off one [who was specially] called up, before the purpose [for which he was called] is accomplished,[1] shall be made to pay the highest fine.

244. He who abstracts one-eigth share [of an article sold] by a [false] measure or balance, shall be fined two hundred [*paṇas*]; where a greater or a lower [share is abstracted], a proportionately [higher or lower fine should be imposed].

245. He who adulterates with inferior [articles], vendible medicines, oils, salt, perfumes, corn, coarse sugar and the like, shall be made to pay sixteen *paṇas*.

246. When [by some operation] inferior earth, hide, gem, yarn, iron, wood, bark, or cloth is made [to appear to be of] a superior kind, the fine is eight-fold of the [commodity] to be sold.

247. He who pledges or sells a sealed casket [fraudulently] substituted [for a superior casket shewn], or the counterfeit of a natural vessel,[2] shall be fined [in the following manner].

248. [When the value of the thing palmed on the buyer, or a pledge is] less than a *paṇa*, the fine is fifty [*paṇas*]; [when] a *paṇa*, one hundred [*paṇas*]; [when] two *paṇas*, two hundred [*paṇas*]; when the value is higher, [the fine is] higher.

249. For those who knowing whether [the price set by them] is higher or lower [than the maximum rates fixed by the king] unite in fixing a price too heavy for *Kárus* (workmen) and *Śilpins*[3] (artizans), the fine is the highest.

250. For those traders who conspire to obstruct [the sale of a commodity by demanding it], or selling it at an improper price, the highest fine is laid down.

251. The sale or purchase [of articles] should every day be made at the rates fixed by the king; the profit derived in this manner is declared [to be] propitious for traders.

252. A trader shall make five per cent as profit on commodities of the same country, and ten [per cent] on the foreign, if the purchase

---

[1] Aparárka does not make *apráptavyavahara* an adjective of *Banddhyam*, but makes up the sense by adding *vádinam* (plaintiff) after the word, so that according to him there are three offences here mentioned, and not two as Vij. would have it.

[2] Such as the bag or skin of the musk-deer containing the musk: Vij.

[3] Vij. gives a washerman as an instance of a *káru* and a painter as an instance of a *śilpin* Kullúka gives a cook as an instance of a *káru*, so that the difference between a *káru* and a *śilpin* seems to be that the latter by his labour gives the material he works on a value quite disproportionate to the original value of the thing; while the workmanship of the former is not so valuable. See also the gloss on v. 5, var. kánḍa ii., Amarakosa, where the different kinds of *kárus* are enumerated.

and sale take place immediately, [*i. e.* on the same day as that of the purchase].[1]

253. The rates should be so fixed [by the king] as to be advantageous both to the buyer and the seller after adding to the [cost] value of the commodity, the expenses incurred.[2]

254. He who having received the price of a vendible thing, does not deliver it to the buyer, shall be caused to deliver it together with *udaya* [*i. e.* either profit or interest], and if [the purchaser] be one come from a foreign country, also the profit which would have accrued to him in that foreign country.[3]

255. A commodity once sold may be sold again, if the purchaser should not desire to take it; when the first purchaser not having received it [when offered] it is [afterwards] destroyed,[4] that loss [being] due to a default [on the part] of the purchaser, shall be [borne] by the purchaser.

256. If a commodity, which [though sold] was not delivered on demand, [and if it] be injured by an act of God or the king, the loss shall fall on the vendor.[5]

257. Where [one] sells [a thing] previously sold to another, [or sells a thing] with blemishes, as [one] without a blemish, the fine is twice the value [of the article].[6]

258. No trader shall recede from a sale, unless he has grounds to complain of ignorance [that his bargain has been] too cheap or too dear. He who does [so recede without such ground] shall be liable to a fine of one-sixth of the value of the article].[7]

---

[1] Vij. says this text affords a clue as to how maximum rates should be fixed by a king in respect of indigenous commodities. The rates of profit here laid down are to be adopted only if a purchased commodity does not lie on the hands of a trader for any length of time; in which case the profits may rise according to the rate of interest. Aparárka agrees with this view.

[2] Vij. refers this verse to foreign commodities, and says that their rates are to be so fixed as to leave a profit of ten per cent to the trader on the price of the article, added to the expenses of going to and returning from the foreign country, paying tolls, &c.

[3] See above p. 131, l. 26.

[4] Vij. adds 'by an act of God or the sovereign'

[5] See above p. 132, l. 1.

[6] This verse applies where the price of the article has been paid to the vendor, although delivery has not taken place. Vij. quotes a text of Nárada (see above p. 132, l. 14), to shew that where the contract of sale is merely oral, and no price has been paid in accordance therewith, neither the vendor nor the vendee are bound by it, save under a special agreement.

[7] Vij. says that the grounds justifying a rescission of sale are three, viz.:—I., ignorance of the vendor in selling a thing too cheap; II., ignorance of the purchaser in offering to pay an exorbitant price; and III., the discovery of some blemish in the article purchased. Save in these cases a contract of sale once made cannot be re-[illegible]; see also Vír. l. 134, p. 2; see the corresponding verses in Manu ch. viii., vv.

## CONCERNS AMONG PARTNERS.

259. Among traders[1] who work for profit in partnership, the profit and the loss [are adjusted] according to [their shares in the entire] capital; or according to the agreement.

260. If a partner does what the others forbid or disapprove, or if he injures common property by his negligence, he should make good the damages; but he who preserves it from [robbers or other] misfortune, should receive a tenth part of it [as his reward].[2]

261. The king shall take as a tax a twentieth share of the price [of a commodity] fixed [by him]. [A thing specially ordered to be] reserved by or worthy of a king, shall, if sold [to a stranger], belong to the king.[3]

262. He who falsely declares the quantity [of the articles of sale],[4] who withdraws himself from the place of [collecting] a tax, and he who purchases or sells fraudulently,[5] shall be made to pay eight times [the value of the commodity].

263. A marine officer, levying a land-cess, shall be made to pay ten *paṇas*. The same [fine shall be levied], in the case of the non-invitation of Bráhmaṇas and *prátiveśyas* (people born in one's neighbourhood).

264. The wealth of a [träder] dying abroad shall be taken by his heirs,[6] *Bándhavas*,[7] kinsmen, or [his copartners] who may have come; and failing these by the king.

265. A man of crooked ways should be expelled [by the other partners] without profit; a partner unable to act may appoint another man to act for him.[8] In this manner is laid down the law for sacrificers, agriculturists, and artizans.[9]

## THEFT.

266. A thief is apprehended by detectives, [either as one in possession of] the lost article, or [as one to whom the theft has been] traced,

---

[1] Vij. understands the term *vaṇij* (trader) as illustrative of an actor, a dancer, or the like. Vír. extends that term to sacrificers and cultivators (see l. 118, p. 1). See Yáj. ch. ii., v. 265 further on.

[2] See above p. 121, l. 20.

[3] Meaning that the king may take it without paying for it.

[4] With a view to evade the full payment of his share of taxation.

[5] The word is *savyája* which Vij. says refers to the sale of a commodity of disputed ownership.

Aparárka and Śúlapáṇi say that a sale effected furtively, or at an improper hour in order to deceive the tax-gatherer, is here meant.

[6] Sons, &c. Vij.

[7] Related through the mother: Vij.

[8] See above p. 121, l. 18.

[9] See the corresponding verses in Manu ch. viii., vv. 206—211.

or [as one] notorious for previous offences, or as one who lives in unknown[1] places.

267—268. Others should [similarly] be apprehended on suspicion, [such as] those who conceal their caste or names, who are addicted to gambling, treachery, or drinking, whose [face] loses colour and voice falters, [267]

Who make [idle] enquiries about another's wealth and houses, who live unobserved, who spend much without having [any means of] livelihood, and who sell lost articles. [268.]

269. If [he who has been] apprehended on suspicion do not clear himself [from that suspicion], he shall be made to give the stolen article,[2] and shall be liable to the punishment of a thief.

270. Having caused restitution of the stolen property, the king shall cause the thief to be punished by different modes of corporeal punishment. A Bráhmaṇa [guilty of theft] should be branded and banished from the kingdom.[3]

271. The blame attaches to the village officer in the case of a murder or theft in his village until some trace [of the offence] is found; to the owner of the pasture ground, [for offences in his pasturage]; to the detectives of thieves, [in case of offences] on a highway, or [in places] other than pastures.

272. A village shall pay when [the theft takes place] within its limits, or that village to which the trace is carried. If [the theft be committed] beyond one *krośa* (two miles) [from any village], [the communities of] five surrounding villages or even of ten villages [shall pay].[4]

273. [The king] shall cause to be impaled on a stake *Bandigráha* (sacrilegious house-breakers), likewise those who steal horses and elephants and also violent murderers.[5]

274. The tongs [*i. e.* the forefinger and index] of the hands of pickpockets and cut-purses should be cut off [for the first offence]; for the second offence, they should be deprived of a hand or a foot.[6]

275. In the case of the theft of inferior, middling and superior articles, the fine shall be according to the value [of the article stolen]. In passing sentence, the place, the time, and the age and the ability [of the offender] shall be considered.

276. To him who knowingly supplies food, place, fire, water, counsel, appurtenances, and [loans for] expenditure, to a thief or a murderer, the fine shall be the highest.

---

[1] The word is अविशुद्ध, which Aparárka translates as wretched. The Vír. (l. 150, p. 2) agrees with Vij.

[2] Where the stolen article is not forthcoming, its restoration will be by valuation.

[3] See above p. 114, lines 22, 17.

[4] See above p. 143, l. 17.

[5] See above p. 145, l. 11.

[6] See above p. 142, l. 32.

277. The fine for a blow with a weapon, and for causing abortion,[1] [is] the highest. In the case of the killing of a man or a woman, the fine shall be the highest or the lowest [according to the circumstances and character of the offender].

278. A woman who is superlatively wicked, who destroys[2] males, who breaks reservoirs, shall, if not pregnant, be plunged into the water after being tied to a stone.

279. A woman who poisons [people] or burns [villages or houses], or kills her husband, preceptor or children, shall be deprived of her ears, hands, nose, and lips, and be killed by bullocks.[3]

280. When [one] is killed by an undetected [person], enquiry as to the enmity [of the deceased] should be made of his sons and relations, as also of adulterous women in his house separately.

281. [It should be enquired] whether [the deceased] was a lover of women, wealth, or *vritti* (allowances); and with whom he went abroad. [So also should] enquiry [be] slowly [prosecuted] of people[4] in the vicinity of the place of murder.

282. Those who set fire to a field,[5] a house, a forest, a village, a pasture ground, a threshing floor; and those who carnally know the wives of the king, should be burnt in a fire of grass.[6]

## ADULTERY.

283. A man should be caught in the very act of adultery; or while holding each other's hairs, or by other signs of excitement, or by the admissions of both.[7]

284. He who touches the knot of the lower garment, the breasts, the upper garment, the thighs, and the hair [of a woman]; who holds conversation with her at an improper place and time; or who closets with her [should be apprehended].

285. A woman [erring after] being forbidden should be fined one hundred [*paṇas*], and a man [under similar circumstances] two hun-

[1] Vij. says the punishment here laid down applies to all forcible miscarriages, save in the case of a Dásí (a female slave), and a Bráhmaṇí, specific punishments having been laid down elsewhere for those cases.

[2] The reading here adopted by Aparárka includes the woman who procures abortion.

[3] Vij. repeats the words अगर्भिणीम् (not pregnant) from the preceding verse, and says this punishment is to be inflicted if she is not with child. Aparárka reads the last quarter as गोभिः प्रवासयेत् meaning she should be banished on the back of a bullock. He notices the above reading, which is adopted by Vij., and according to which the above translation is made.

[4] Such as cowherds and foresters: Vij.

[5] With ripe corn: Vij.

[6] See the corresponding verses in Manu ch. viii., vv. 302—343.

[7] See above p. 152, l. 36.

dred; where the prohibition [has been laid] on both, their punishment is the same as [that] for adultery.[1]

286. [For intercourse with one] of an equal class, the highest fine may be imposed; [with a woman] of a lower class, the middling [fine]; and [with one] of a higher class, death [in the case] of the man, and the lopping of ears or other [limbs] in the case of the woman.[2]

287. He who kidnaps a maiden of the same class shall be fined in the highest amercement if the maiden be adorned,[3] and in the lowest, in other cases. Death is laid down [for this offence] towards a superior class.

288. In the case of willing maidens of inferior classes, there is no offence, but, if otherwise, there will be a fine.[4] He who defiles [a maiden] shall have his hand cut; and [he shall lose] his life if she be of a higher class.

289. He who utters a [true] slander against an [unmarried] woman shall pay a hundred [*paṇas*]: but for a false accusation [he shall pay] two hundred. For connexion with a beast he shall be made to pay a hundred, and the middling fine for connexion with a distressed woman or a cow.[5]

290. A man [having intercourse] with an *avaruddhá* (protected female slave) and *Bhujishyá* [another's mistress] shall be required to pay a fine of fifty *paṇas*, even though intercourse with them be [in other respects] permissible.[6]

291. For forcible connexion with a *Dásí*,[7] the fine is declared to be ten *paṇas*; when several [have a forcible connexion] with an unwilling *Dásí*, the fine for each is twenty-four *paṇas*.

292. A prostitute who has received her wages, shall, if unwilling, be made to pay twice as much. Similarly if the man [after payment of the wages] be unwilling, he shall forfeit [his advance].

293. If a man have intercourse with a woman in an improper part, or make water, or void excretion,[8] he shall be fined twenty-four *paṇas*; so also he who has connexion with a female devotee.[9]

294. If a man have connexion with an *Antyá* woman, he should be branded with an obscene mark, and banished. If a Śúdra [act in such a manner], he is similarly liable to be branded. But if an *Antya* have connexion with an Árya woman,[10] he shall be put to death.

---

[1] See above p. 149, l. 34.
[2] See above p. 150, l. 3.
[3] For being given in marriage: Vij.
[4] The lowest according to both Vij. and Aparárka.
[5] See above p. 153, l. 2.
[6] See above p. 152, l. 2.
[7] Female slave or a prostitute: Vij.
[8] Before women: Vij.
[9] See above p. 153, l. 7.
[10] See Mayukha p. 152, l. 16. See the corresponding verses in Manu ch. viii., vv. 352—372.

## MISCELLANEOUS.

295. He who either omits or adds anything in writing to the king's edicts, or he who allows an adulterer or a thief to escape, [shall suffer] the highest amercement.[1]

296. He who defiles a Bráhmaṇa, a Kshatriya, a Vaiśya, or a Śúdra by feeding him with things not fit to be eaten, shall be [respectively] amerced with fine for the highest, the middling, and the lowest *Sáhasa* and half [of the last].[2]

297. He who deals in false gold [as pure], and he who sells unclean meat, should be maimed and compelled to pay the fine for the highest *Sáhasa*.[3]

298. There shall be no offence in any injury caused by means of a quadruped, [a log of] wood, [a clod of] earth, a stone, an arm, or a yoked beast [if the user or driver thereof] was crying aloud 'Be away.'[4]

299. In the case of a death [caused] by a conveyance, owing to the nose-string [of the animals] having given way, or the yoke and the like having been broken, or [the animals] backing, the owner shall not [be deemed to] be at fault.

300. The master of any animals, whether possessed of teeth or horns, who, having the power, still fails to relieve [any one in pain from it when attacked], shall be fined in the lowest amercement, and in double [that amount] if the sufferer likewise cry out [for help] beforehand.[5]

301. He who charges a gallant as a thief, shall be made to pay five hundred [*paṇas*] as a punishment. For him who taking money [from him] lets him go, eight times its amount is ordained [as the fine].[6]

302. The king should banish after cutting out his tongue that man who imprecates evil against him, who calumniates him, or who divulges his secret counsels.[7]

303. The punishment of him who sells what was on a dead body, and likewise of him who strikes his preceptor, and of him who seats himself in the king's carriage or throne, is the highest amercement.[8]

304. The punishment of him who puts out both eyes [of another], who performs acts forbidden by the king, or who being a Śúdra lives as a Bráhmaṇa, shall be eight hundred [*paṇas*].[9]

---

[1] See above p. 154, l. 20.
[2] See above p. 154, l. 24.
[3] See above p. 154, l. 23.
[4] Vij. says that all that is meant here is that an unwitting agent of injury shall not be liable to temporal punishment; but the agent of the mischief can in no case escape the performance of a penance.
[5] See above p. 154, l. 33.
[6] See above p. 155, l. 7
[7] See above p. 155, l. 11.
[8] See above p. 155, l. 18.
[9] See above p. 155, l. 22.

305. An unjust decision should be revised by the king, and the *sabhyah*, (assessors,) together with the person in whose favour it was given, should be fined in twice the amount [in dispute.][1]

306. If a man, though he have justly lost his cause, thinks 'I am not justly conquered,' and again comes into court, he, when again non-suited, shall be made to pay a double fine.[2]

307. What has been obtained through injustice by the king as fine, having devoted it to Varuṇa, let him give with his own hand increased thirty-fold to Bráhmaṇas.[3]

---

[1] See adove p. 155, l. 34. [2] See above p. 155, l. 37.
[3] See above p. 156, l. 24.

# PRÁYAS'CHITTÁDHYÁYA.

## CHAPTER [III.]—ON PENANCES.

### IMPURITIES.

1. A [deceased child] less than two years old, should be interred. No water should be offered. Any other deceased should be followed to the funeral ground by his kinsmen.

2. He should be burnt with ordinary fire [by the followers] muttering hymns, [metrical as well as prose, and [sacred to] Yama. If initiated, he should be burnt like one who keeps the domestic fires, as far as possible.

3. Before the seventh or the tenth day, the kinsmen should go to a stream, citing the hymn commencing with *apa nah śośuchat agham*, (away our glaring sin, &c.) and facing the south.

4. Similarly water should be offered to the deceased mother, father and the religious preceptor. To offer water to a deceased friend, married [daughter or sister], son of a sister, father-in-law, and a sacrificial priest, is optional.

5. [Pronouncing] the name and the *gotra* [of the deceased], [but] uttering nothing [else], the kinsmen, except Brahmacharins and outcastes, should [each] offer water-libation once [to the departed].

6. Men should neither observe impurity on account of the death of, nor offer libations of water to such [of their kinsmen] as are heretics; or have not embraced any of the [four] orders; or are thieves or females who have murdered their husbands, or prostitutes and the like, addicted to drinking; or have committed suicide.

7. When [the kinsmen of the deceased] have finished offering libations, bathed, emerged [from the stream], and taken their seats on a soft grass plot, [the old] should argue them out of grief, by means of narrations of bygone times.

8. He, who seeks for anything eternal in [this] human life, which is as feeble as the stem of a plantain-tree, and as [evanescent] as a bubble of water, is under a delusion.

9. What ground is there for lamenting, if a body, created out of the five elements by reason of actions performed in a former life, is restored to the five elements.

10. [Even] the earth, the sea, and the gods are to go to destruction. How, then, can the world of mortals, which is [transitory] like foam, not go to destruction.

11. As the departed soul is compelled to swallow the phlegm and tears cast by his kinsmen, they should not lament, but perform obsequial ceremonies according to their power.

12—13. Having listened to these consoling arguments, they should go home, the children walking before. At the door of the house, restraining their grief, eating the leaves of *Nimba*, [12]

Sipping water, touching fire, water, cow-dung, white mustard-seed, and the like, and placing a foot on a stone, they should slowly enter the house. [13.]

14. Performance of the obsequial ceremonies, such as entrance into the house, is incumbent even upon strangers who have touched a dead body. If desirous of instantaneous purity, they can have it, by performing ablutions and *Prāṇāyāma* (suppression of breath).

15. A Brahmachárin, even after having carried [the corpse of] his religious preceptor, parents or family priest, has his sanctity inviolate. He should not partake of the food prepared by his impure kinsmen; nor should he live with them.

16. [The kinsmen of the deceased] should subsist, during impurity, on provisions bought, or supplied; and sleep on the ground apart from each other. For three days they should offer food to the departed in the manner prescribed for the performance of *Piṇḍayajña* (offering rice-balls).

17. On the first day, water and milk should be suspended in the air, [each] in a [separate] earthen pot. Ceremonies sacred to the sacrificial and domestic fires should be performed as directed by the Vedas.

18. Impurity on account of the death [of a kindred] is desired to extend either over three or ten days; and [that on the death of a child] less than two years old [affects] the parents only, even as the impurity arising from the birth of a child [affects] the mother alone.

19. Impurity on account of birth affects the parents only. In the case of the mother, [however,] such impurity lasts long, until the cessation of the flow of blood. The day [of the birth of a child] must not be looked upon as unholy; for [it is a day on which one of the] forefathers is again brought into existence.

20. When birth or death takes place during [a similar impurity already commenced], [the man] will be purified at the end of the remaining period of the first impurity. Impurity arising to the mother from miscarriage, terminates after the lapse of as many nights as the months [of pregnancy].[1]

[1] According to Vij. and Śúlapáṇi, this rule applies if the miscarriage is before the seventh month of pregnancy.

That impurity is transitory which attaches to a man on account of the death of such of his *Sapiṇḍas* as are killed by their sovereign, or a cow,[1] or a Bráhmaṇa,[2] or as have committed suicide. In the case of a [*Sapiṇḍa*] gone on a travel [and dying abroad], impurity lasts for the remaining portion [of the usual period of ten days]. After the full [period], [a twice-born shall be] purified by offering libations of water [to the deceased].

22. On account of the birth or death [of a *Sapiṇḍa*], a Kshatriya should observe impurity for twelve days, a Vaiśya for fifteen days, a Śúdra for thirty days; but a Śúdra, leading a pious life, for fifteen days.

23. Impurity on account of a *Sapiṇḍa* child dying before teething is ordained to be momentary; that on account of a *Sapiṇḍa* child dying after teething and before tonsure, one night; and after tonsure, and before *Upaṇyana*, three nights; and in all other cases the impurity lasts for ten days.

24. Impurity lasts for one day on account of the death of an unmarried daughter, or an infant child, or a religious preceptor, or a pupil, or an *Anúchána* (the reciter of the Veda with its *aṅgas*), or a maternal uncle,[3] or a *Śrotriya*.[4]

25. Impurity on account of the death of sons other than a legitimate one of unchaste wives or of the sovereign of the place of residence lasts for one day.

26. A Bráhmaṇa should in no case follow [the dead body of] a twice-born,[5] or of a Śúdra; if he does follow, he becomes pure by bathing in a stream, touching fire, and swallowing clarified butter.

27—28. Sovereigns are exempt from impurity. Impurity never arises from the death of one killed by lightning, or in a battle for the sake of Bráhmaṇas and cows, or to a man indispensably needed by the sovereign; [27]

So also to sacrificers, and the host of the sacrifice as being engaged in a sacrificial ceremony, to those who give food to travellers,[6] to those who have commenced any rites, to Bráhmacharins, to those who give in charity, and to those of the fourth order. [28.]

29. Impurity is momentary [on occasions of a pre-arranged] charity, or a marriage ceremony, or a sacrificial ceremony, or a battle, or when one's country is overwhelmed by a calamity, or himself plunged in a great difficulty.

---

[1] Illustrative of all dangerous animals.
[2] Illustrative of all classes and castes.
[3] Vij. makes the word *mátula* here illustrative of all the technical *Bandhus*.
[4] One who has studied one redaction of a Veda.
[5] Other than a Sapiṇḍa: Vij.
[6] The keepers of *Annasatras*: Vij.

30. Touched by a woman when in her monthly course, or by impure persons, a man should bathe, or sip water, reciting the *mantras* (Vedic formulas) sacred to water, and once muttering the *Gáyatrí*.

31. Time, fire, religious ceremonies, earth, wind, mind, knowledge, religious austerities, water, repentance, and fasts—all these are causes of purity.

32. Charity is the purifier of those who do prohibited actions; velocity that of a river; earth and water those of unclean things, and *Sannyása* (entrance into the fourth order) that of the twice-born.

33. The recitation of the Veda is the purifier of those who know the Vedas; forgiveness that of the learned; water that of the body; muttering [of Vedic verses], that of those whose sins are concealed; and truth that of the mind.

34. Religious austerities and self-knowledge are the purifiers of the soul; knowledge that of the intellect; knowledge of God is deemed to be the pre-eminent purifier of the soul.[1]

---

## DUTIES UNDER DISTRESS.

35. Under distressed circumstances, a Bráhmaṇa may maintain himself by following the military or the mercantile callings. Having surmounted [the distress], he should get purified and resume his proper occupation.[2]

36—39. Fruits, [precious] stones, linen cloth, the *soma*-plant, a human being, sweetmeat, creepers, sesamum seed, cooked rice, juices, salts, curds, milk, clarified butter, water, [36]

Weapons, liquors, wax, honey, *lákshá* (sealing-wax), and *kuśa*-grass, earth, hides, flowers, blankets, hair, buttermilk, poisons, land, [37]

Silken cloth, indigo, salt, flesh, single-hoofed animals, lead, vegetables, green medicinal plants, oil-cake, [wild] beasts, and also perfumes—[38]

These [a Bráhmaṇa] though living by the calling of a Vaiśya, shall never sell. For religious purposes a man may barter sesamum seed for an equal quantity of grain. [39.]

40 The sale of *lákshá* (sealing-wax), salt or flesh is a ground for being outcast, and that of milk, curds, or liquors, degrades the class.[3]

---

[1] See the corresponding verses of Manu ch. v., vv. 58—110.

[2] Vij. says the rule here laid down is general, and permits any man under difficulties to follow the occupation of a class lower than his own.

[3] *i. e.* A twice-born becomes a Śúdra.

41. A Bráhmaṇa reduced to want does not incur sin by accepting gifts from, or partaking of food prepared by, any man whatsoever; for he resembles[1] the fire and the sun.

42. Agriculture, manual arts, service, tuition, usury, [letting] carriages, [selling grass and fuel fetched from] mountains, winning the favour [of the rich], cultivation of marshy land, [asking support of] the king, and begging alms, are means of livelihood for a man in distress.

43. A man should suffer starvation for three days, and pay than rob anybody, except a Bráhmaṇa, of grain. Having so taken it away, he should, when asked, honestly confess it.

44. Having made an inquiry as to the conduct, pedigree, character, proficiency in the Śástrás and the Vedas, religious austerities and the family of such a man, the king should enable him to live by honest means of livelihood.[2]

---

## THE DUTIES OF A VÁNAPRASTHA (A HERMIT).

45. Desirous of leading the life of a hermit, a twice-born, having entrusted his wife to the care of his son, or been followed by her, should go to a forest, taking along with him the sacrificial and the domestic fires, [and] abstaining from all sexual intercourse.

46. There, allowing hair to grow on his face, head, and other parts of his body, and keeping under control his desires and affections, he should gratify the fires, the manes, the gods, guests and servants, by [grain] not produced in a ploughed field.

47. There he should accumulate [only such a store of] food as would suffice [for him] for a day, a month, six months, or a year. Any accumulation [in excess of the above] should be spent in the month of Aśvina.

48. He should restrain his passions, bathe thrice every day, abstain from accepting gifts, study the Vedas, practise charity, and seek the welfare of all creatures.

49. He should use his teeth instead of a mortar [for unhusking edible grains]; subsist on things ripening in their [due] season; use stone slabs [for pounding]; and use oil extracted from fruits in performing [religious rites ordained by] the Śrutis and the Smṛitis and for secular purposes.

---

[1] The resemblance lies in the Bráhmaṇa's freedom from degradation under the above circumstances, and in the fire or the sun not having its lustre diminished by the contact of an impure thing: Vij.

[2] See the corresponding verses in Manu ch. x., vv. 81—131.

50. He should perpetually observe *chándráyanas* or *Kṛichchhras*;[1] and should eat once a fortnight, or once a month, or every day after sunset.

51. At night, with a pure heart, he should sleep on the ground. He should pass the day, either by walking about, or by now standing, now sitting, and now roaming, or by the practice of *yoga* (meditation).

52. In the hot season he should sit in the midst of sacred fires. In the rainy season he should sleep on an [unprotected] piece of ground. In the cold season he should wear wet garments; or [when unable to do these], he should perform religious austerities according to his power.

53. He should be equally disposed towards him who torments him with thorns, and towards him who anoints him with sandal-powder, by not manifesting anger or good will respectively.

54. Or having put the sacred fires within himself, he should seek shelter under a tree, subsist on a measured quantity of food, and beg alms at the dwellings of hermits, enough to maintain life.

55. Or fetching eight morsels of food from a village, he may eat them silently; or subsisting on the air, may go on travelling towards the north-east, until his body is destroyed.[2]

## DUTIES OF A YATI (AN ASCETIC).

56—57. [After completing the term] either of a householder, or a hermit, performing a sacrifice to Prajápati, wherein the whole property is given away as *Dakshiṇá* (present), and resting the fires within himself, [56]

And not otherwise, shall he who has studied the Vedas, has muttered recitations, has begotten sons, has fed [people], and has worshipped the fires, turn his mind towards the emancipation of the soul. [57.]

58. Indifferent to all beings, composed, carrying three sticks, with a wooden pot, and keeping no company, he should betake himself to a village, only to beg alms.

59. Keeping his senses under control, unmarked, and paying no regard to [the gratification of] the palate, he should in the evening beg alms enough to sustain life, in a village destitute of mendicants.

60. Pots [prescribed for the use] of an ascetic, should consist of earth, bamboo, wood or gourd. These are cleansed by water, and scoured with the hair of cows.

[1] For descriptions of these, see further on, vv. 313—328 of this chapter.

[2] See the corresponding verses in Manu ch. vi., vv. 1—31.

61. By keeping his senses under restraint, abandoning love and hatred, and ceasing to be a source of terror to all creatures, he [*i. e.* his soul] is emancipated.

62. An ascetic should especially effect the purification of his heart, as that is the means to the attainment of knowledge[1] and freedom from obstacles.[2]

63—64. He should meditate on the abodes of embryos in the womb, the various consequences of [evil] actions, mental and bodily pains,[3] afflictions, decrepitude, deformities; [63]

Births among thousands of species of animals, and vicissitudes of fortunes and misfortunes. With his mind concentrated and restrained [from worldly objects], he should carefully view his soul as identical with the soul [of the universe]. [64.]

65. Asceticism does not consist in wearing its badges; for that [*i.e.* the final purpose of asceticism] is attained even otherwise. [The ascetic] should therefore never practise towards other men anything which is disagreeable to himself.

66. Speaking the truth, abstinence from theft and anger, modesty, cleanliness, discrimination, equanimity, sobriety, temperance, and self-knowledge—these are declared [to constitute] the duties [of the order].

67. Souls spring from the Universal soul, in the same manner as sparks do from a red-hot ball of iron.

68. There the soul performs certain actions consciously, whether meritorious or sinful; others instinctively; and others still on account of previous association.

69. That Being who is the primary cause, imperishable, the doer [of actions], the knower [of everything], the essence [of the universe] the abode of attributes, independent and eternal, is [yet] said [in common parlance] to be born, when he assumes a body.

70. As he created, at the beginning of the creation, the space, air, fire, water and earth—each possessing one property over and above [those possessed by the preceding element]; so does he assume them, when he becomes incarnate.

71. Oblations [offered during the performance of sacrifices] gratify the sun; the sun causes rain; rain produces herbs; when eaten, the herbs, [being successively transformed into] different juices, [ultimately] acquire seminality.

---

[1] Relating to the identity of the soul with Brahma: Vij.

[2] In his spiritual meditations: Vij.

[3] See Patanjali's *yoga* Sútra, p. 18 (*páda* ii., *sútra* 3).

72. When a carnal union takes place between a man and a woman, and when the semen of the one and the uterine blood of the other are pure, the universal soul, himself the sixth element, simultaneously grasps the five [other] elements.

73—74. Limbs and senses, the mind, vitality, understanding, life, happiness, equanimity, discrimination, memory, activity, misery, desire, and also egotism, [73]

Action, form, colour, voice, hatred, affluence and poverty—all these belong to that Universal Spirit without a beginning, by virtue of a cause existing within himself, whenever he desires beginning. [74.]

75. Mixed up with the [five] elements, the soul remains in the condition of a fluid during the first month. In the second month it becomes a slightly hard lump of flesh. In the third month it gets limbs and organs of sense.

76—78. Agility, fine perceptivity, articulation, the sense of hearing, strength and other qualities, from the ether; the sense of touch, motion, the power of dilating the limbs, and roughness, from wind; [76]

Sight, power of digestion, heat, colour, luminosity [from the fire]; [the sense of] taste, coolness, unctuousness, moisture and softness, from the water; [77]

Smell, [the sense of] smelling, weight and shape, from the earth—all these the eternal soul obtains during the third month, and then begins to move about. [78.]

79. If a pregnant lady is not provided with the objects she longs for, the fœtus contracts defects or deformity, or even dies. Therefore her wishes should be attended to.

80. In the fourth month, the limbs of the fœtus acquire steadiness; in the fifth blood is produced; in the sixth, strength, colour, nails and hair are produced.

81. In the seventh month it is invested with mind, consciousness, arteries, sinews and blood-vessels, and in the eighth month it is invested with skin, flesh and memory.

82. The principle of vitality, in the eighth month, rapidly shifts now to the mother and now to the fœtus. Hence a child born in the eighth month dies.

83. In the ninth or the tenth month, troubled in the narrow cavity [of the womb], the fœtus is forced out, like an arrow, by violent delivery winds.

84. The body passes through six transformations, has a coating of six membranes, and consists of six parts and three hundred and sixty bones.

85. The teeth, together with the bones at their roots, number sixty-four. The nails number twenty. The straight bones, in arms and legs, are also twenty in number. These (nails and straight bones) are distributed in four (different) places.

86. There are sixty bones in fingers, two in the two heels, four in ankles, four in arms, and as many in legs.

87. It should be remarked that the knees, the cheeks, the flat thighs, the shoulders, the temples, the palate and the flat buttocks have each two bones.

88. The secret part has one bone; the back has forty-five; the neck has fifteen; the parts between the neck and the shoulders have each two; and the chin has one.

89. There are two bones at the root of the chin. The forehead, the eyes, and the temples have, each, two bones. The nose has got one called *ghana*. The bones in the sides, together with those at the roots of the teeth, and those called *Arbudas*, amount to seventy-two.

90. There are two *Śankhas* (bones between the forehead and the ear). The head has four. The breast has seventeen. This is the collection of bones in the body of a man.

91. Odour, colour, taste, touch and sound are called the objects of senses. The nose, the eyes, the tongue, the skin, and the ear are called the organs of senses.

92. The organs of action, it should be known, are five, viz., the hands, the anus, the organ of generation, the tongue, and the feet. The mind partakes of the nature of both [*i. e.*, the organs of action and the organs of perception].

93. The navel, energy, the anus, the semen, the uterine blood and the temples; the head, the shoulders, the throat, and the breast, are the abodes of the vital principle.

94—95. [So are] the omentum, the brain, the lungs, the navel, the bladder, the liver, the spleen, the small cavity of the heart, the kidneys, lower belly, the rectum, [94]

The stomach, the heart, the larger intestine near the anus, the organ of excretion, the belly, and the intestines in the abdomen:—this is a statement at length [of the seats of vitality]. [95.]

96—99. The pupils of the eyes; the eye-corners, the orifices of the ears, the tragus, the ears, the two temporal bones, the eyebrows, the gums, the two lips, the two cavities of the loins, [96]

The groins, the testicles, the kidneys, the breasts, the epiglottis, the buttocks, the shoulders, the fleshy parts of the lower parts of the legs and of the thighs, [97]

[The following] parts of this body [viz.] the palate, the belly, the lower belly, the head, the chin, the glands on the neck, the depressed parts of the body, [98]

The four eyes and ears [together], the feet, the hands, and the heart; and the nine orifices:—these are the seats of the vital principle. [99.]

100. There are seven hundred veins, nine hundred sinews, two hundred arteries, and five hundred muscles.

101. The tubular vessels in the body, called variously veins, arteries, are known to be two millions nine hundred thousand nine hundred and fifty-six.

102. There are three hundred thousand of hairs in the beards of men. In the human body there are one hundred and seven vital parts, and two hundred joints.

103. The hair on the body, together with the passages of perspiration, amount to five hundred and forty-six millions, seven hundred and fifty thousand.

104. These are counted by the separated atoms of wind. Whoever knows the above economy [of the body] is the head [of learned men].

105—106. The human body, it should be known, contains nine scotticefuls of juices, [and] ten of water. There are, it is said, in the human body only seven scotticefuls of excrement, eight of blood, [105]

So six of phlegm, five of bile, and four of urine, three of the flesh-oil, two of the flesh-juice, and one of the marrow of the bones. The head contains half a scotticeful of marrow [106].

107. The essence of phlegm and semen are contained in the same quantity. The human body thus described is transitory. He is great, who uses it as a means to the attainment of the final emancipation of the soul.

108—109. From the heart rise seventy-two thousand tubular organs, some called benign and others unbenign. In the midst of these tubular organs, there is a disk, resplendent like the moon [108],

In the midst of which is seated the soul, like a steady light. Man should know him. By knowing the soul, man will, certainly, never be born again in this world. [109.]

110. He who wishes to obtain a knowledge of the *yoga* [system of philosophy], should master the Áraṇyaka which I received from the sun, and the science of *yoga* taught by me.

111. A man should meditate upon the soul, seated in the heart like a light, after having withdrawn his mind, intellect, memory and senses from all other objects.

112. If one were to chant verses from the Sáma-Veda, conformably to the prescribed rules, regularly and attentively, he would attain, by this practice, knowledge of the grand *Brahma*.

113—114. *Aparántaka, Ullopya, Madraka, Prakari, Auvenaka, Sarobindu,* and *uttara,* [113]

*Riggáthá, Paṇika, Dakshavihita, Brahmaqîtiká*—these songs are called *mokshas* (final emancipators), because their study is a means to [the final emancipation of the soul.] [114.]

115. He who is versed in the principles of playing on a lyre, who thoroughly understands the *Śrutis* and the *Játis* in music; or is versed in *Tálas* (keeping time)—these easily obtain the road to the final emancipation.

116. If a man versed in music does not obtain the highest object of human desire, and in spite of his concentration, he becomes a follower of Śiva [after death], and delights in his company.

117. "It has been said that the soul is without a beginning, that it gets a beginning by [the acceptance of] a body; that the whole universe has sprung from the soul; and that the soul owes her beginning to the universe.

118. We are at a loss," [said the sages to Yájñavalkya,] "to understand this. Tell us whence came this universe, with its gods, demons and men; and how was the soul created."

119—120. The being who, in this world, is cognizable on throwing away the cloud of delusion as possessed of a thousand hands, a thousand feet and a thousand eyes, resplendent like the sun, and with one thousand [heads], [119]

Is the universal soul. He is [the presiding deity of] sacrifices; is all-pervading; is the creator; is the *Virája*; and under the form of food, becomes the sacrifice himself. [120.]

121—122. The juice, into which the things offered as oblations to gods, are transformed, after having gratified the gods, and conferred upon the sacrificer his desired object, [121]

Is carried by the wind to the moon, and thence by the solar rays to the regions of the sun, which are identical with the Ṛich, Yajush and Sáman [Vedas], [122]

123. The sun, from his own regions, sends down excellent nectar, which is the source of the existence of all things, organic and inorganic.

124. This food is offered in sacrifices, [which produce] food, [which food again is offered in] sacrifices. Thus revolves this unbeginning and endless wheel.

125. The soul is without a beginning. The individual soul has no beginning. The association of that soul [with the body] is the result of delusion, desires, hatred and actions.

126. The four classes sprang respectively from the mouth, arms, thighs and feet [respectively] of that Being who pervades thousands upon thousands of bodies, who is the Prime Lord, and of whom I have [already] spoken to you.

127—128. The earth sprang from his feet; the heaven from his head; the vital winds from his nose; the quarters from his ears; the wind from his touch; the fire from his mouth; [127]

The moon from his mind; the sun from his eye; the sky and the rest [of the universe], together with its moveable and immoveable objects, from his hip. [128.]

129. "Oh philosopher, if this be the case, how does the universal soul take birth among inferior animals; Almighty [as he is], how does he entertain low desires.

130. Endowed as he is with senses, how does he not retain the knowledge of former existences. Pervading all things, as he does, how does he not know what all creatures feel" [asked the sages].

131. It is in consequence of the sins proceeding from the actions of the mind, the speech and the body, that the soul comes into existence as an *Antya* (a low caste-man), or a bird, or an immoveable object; and takes birth among hundreds of species of animals.

132. As there exist in the bodies of animals innumerable desires and affections; so there exist animals, among all species, with various forms.

133. The consequences of certain actions are brought about after the death of the doer; of certain actions, here (while the doer is alive); and of certain actions, both here and hereafter. Here the nature [of actions performed] is the cause [of those results].

134. He who thinks of taking away the wealth of others; he who contemplates evil to others; and he who ever believes illusions to be realities;—these are born among low castes.

135. A liar, a slanderous man, and he who speaks harshly—these are born among quadrupeds and birds.

136. He, who is addicted to stealing; who keeps illegal intercourse with the wives of others; who kills animals in a manner other than prescribed;—these come into existence as immoveable objects.

137. He who, having the quality of goodness predominant in him, is possessed of self-knowledge, and purity, preserves his mind tranquil, practises religious austerities, holds his passions under control, performs his religious duties, and is versed in the Vedas, is born among celestial beings.

138. He who, having the quality of passion predominant in him, takes delight in reproachable actions, is prone to distraction, is always

dabbling in various matters, and is a sensualist; such a man [when dead] is born among men.

139. He, who, having the quality of ignorance predominant in him, too much indulges in sleep, does cruel actions, is avaricious, is an atheist, lives by begging, is imprudent, [and] inconsistent in his actions: —such a man is born among animals.

140. Thus influenced by passion and ignorance, roving here and there, and harassed by troublesome passions, the soul comes into worldly existence.

141. The individual soul, with its imperfect senses, is incapable of knowledge, even as a dusty mirror is incapable of reflecting the face.

142. Recollection [of a past life] is not to be found in an individual soul with its senses made imperfect,[1] in the same manner as sweetness is not to be found in a raw bitter cucumber, though such sweetness exists in that fruit.

143. A man feels, within his own person, what all other beings feel. On the other hand, a sage, freed from the influence of egotism, feels what all other beings feel, by means of his identification with the Universal soul.

144. The soul, single as it is, seems divided, in the same manner as the sky, one as it is, seems divided in reference to pots and other things, or as the sun [when reflected] in [different] reservoirs of water.

145. The spirit, the sky, wind, fire, water, and the earth are called *Dhatus* (the ultimate constituents of all bodies). These [*i. e.*, the five last] are sensible elements; and the spirit is a spiritual element. From [a combination of] these proceed all the moveable and immoveable objects.

146—148. Just as a potter creates an earthen jar by use of the earth, the stick and the wheel; or as a house-builder builds a house by means of grass, the earth and wood; [146]

Or as a goldsmith makes an ornament by simply using gold; or as a silk-worm makes a cocoon by means of his own saliva; [147]

So does the [Universal] soul combine the five elements with the senses, and produce himself in the form of different existences. [148.]

149—151. The soul is a reality, just as the elements are; or else who could have perceived by one organ of sense such as touch a thing, apprehended by another such as sight; [149]

Who could have recognized a voice, once heard, upon hearing it again; who could have have had recollection of past things; what could have caused a dream; [150]

[1] By anger and the like: Vij.

Who, defining himself by his extraction, beauty, age, character, acquirements and the like, could run after the objects of the senses such as sound and the like, by means of acts, mind and speech. [151.]

152—153. The soul, sunk in ignorance, entertains a doubt whether actions are productive of results or not; deems himself perfect, though far from perfection; [152]

Believes under a delusion that wives, sons and ministers are his and he theirs; and with regard to objects, beneficial or otherwise, entertains incorrect notions. [153.]

154. [That soul] which cannot discriminate between itself, its own essential nature, and its accidental condition, attempts to fast till death, leap into a fire, or plunge into water.

155. Thus acting, devoid of self-restraint, and going after improper ends, the soul is imprisoned [in a mortal body] by his actions, hatred, delusion and desires.

156—159. Assiduous attendance upon his religious preceptor; meditations on the meaning of the Vedas and the Śástras; performance of the religious rites prescribed by them; association with the righteous; gentle language; [156]

Abstaining from looking at and touching women; feeling for all creatures in the same manner in which he would feel for himself; abandoning his family; putting on worn-out red garments; [157]

Restraining the senses from their respective objects; shunning slumber and laziness; forming a correct judgment of the [weakness of the] body; bewaring of every transgression in all his movements; [158]

Freedom from ignorance and passion; purity of the heart; indifference; tranquillity of the mind—purified by these means and with the quality of goodness predominant in him, a man becomes exempt from death [159].[1]

160. The union [of the Individual with the Universal soul] is brought about by remembrance of the Universal soul, self-meditation, by means of the quality of *sattva* (goodness), by the destruction of all motives of actions [as the seeds of mortal existences], and by association with the righteous.

161. When, at the time of the dissolution of his body, the mind is, with due calmness, fixed on God, and the heart is freed from the cloud of ignorance, the recollections of all previous existences are revived in him.

162. The soul animates bodies of various forms in virtue of its actions, even as an actor, when acting various parts, paints his body with various colours.

[1] And birth, adds Vij.

163. Deformities, such as destitution of a limb, seen in some children from their birth, are due to the time [of their birth], their actions [in former lives], defects in the seed, and in the mother.

164. The soul never becomes free until it is clogged with egotism, the mind, repeated births, consequences of actions, and the body.

165. As lights which subsist on the wick, the stand and the oil are [sometimes simultaneously and prematurely] extinguished, so are human lives.[1]

166. The individual soul, who is seated in the heart like a steady light, has innumerable rays; some white, some dark, some variegated, some reddish, and some purple.

167. Of these rays one running upwards, passes through the solar sphere, and rises higher than the regions of Brahmá. By its means the soul obtains final beatitude.

168. The individual soul attains resplendent divine bodies, along with their habitations, by means of a hundred of these rays, which also extend upwards.

169. There are other rays of different colours and gentle splendour, extending downwards, through which the soul is compelled to be born in this world, in order to enjoy the fruits of his actions.

170—173. The Vedas, the Śástras, self-knowledge, birth and death, affections, movements to and fro, truth and falsehood, [170]

The attainment of desired objects, happiness and misery, good and bad actions, effects from portents, verified prophetic declarations, and the conjunctions of planets, [171]

Movements of the planets and the stars, the waking and the dreaming states of the man, the sky, the air, fire, water, the earth and darkness, [172]

The revolution [of cycles] such as *manvantaras*, the *yugas*, the results of charms, and [of the applications of] particular herbs—from all these, know that the soul exists, and is the cause of the universe. [173]

174—176. Self-consciousness, memory, intellect, hatred, perception, pleasure, courage, perception [of one thing] by the different senses, desires, the animate state of the body, life, [174]

Heaven, dreams, activity of the organs of sense, activity of the mind, winking of the eyes, the efforts of consciousness, and the combination with the five elements;—[175]

All these are indications of the prime spirit; and therefore there does exist a soul apart from the body such as pervades and rules everything. [176.]

[1] Vij. explains this by saying that bodies, like everything else, are subject to dissolution from causes certain, as well as accidental.

177—178. The organs of perception, together with their respective objects, the mind and the organs of action, self-consciousness, intellect, the five elements beginning with the earth, [177]

And the primary germ of nature—these constitute this *kshetra* (body), and the soul hereof is called *kshetrajña*. That soul pervades all things, and is both existent and non-existent. [178.]

179. From the prime germ of nature, sprang the intellect; from the intellect, self-consciousness; from self-consciousness, the five subtler elements, [and the five grosser elements,] each of which has one property more than that which precedes it.

180. Sound, tangibility, colour, flavour, and odour are the five properties [of the grosser elements]. Each of these will be absorbed [in the end] in that from which it sprang.

181. I have already described to you how the soul, all-powerful as he is, creates himself, in consequence of the three kinds of actions.

182. The qualities of goodness, passion and ignorance belong to the same Almighty Being, who rolls like a wheel, under the influence of passion and ignorance.

183. The same Most Pre-eminent Being, who has no beginning and who has a beginning, appears under various forms, and is then said to be one whose real nature is to be known by means of the aforesaid marks and by the organs of sense.

184. The space between the path of the Immortals and the sage Agasti, constitutes the path of the *Manes*. Those *Agnihotrins*, who are desirous of heaven, go to it by that path.

185. Those who are sincerely devoted to charitable actions, those who are possessed of the eight qualities, and those who are devoted to the observance of truth also [go] by the same path [to heaven].

186. There live eighty thousand sages leading the life of householders, who are subject to continued existence, who are the source [of the system of religion], and who promulgate it [at each beginning of the creation].

187. In the world of the Immortals, in the space between the sphere of the Seven Sages and the path of the Elephant of the quarters, there live as many sages unconcerned with all pursuits.

188. In virtue of their religious austerities, perpetual celibacy, freedom from all improper intercourse and their intellectual pursuits, they continue to reside there until the final annihilation of the universe.

189. From these [two sets of sages] proceeded the Vedas, the Puráṇas, the philosophical Upanishads, metrical writings, the Sútras, the commentaries, and all other writings which may be existing.

190. Recitation of the Vedas, sacrifices, perpetual celibacy, religious austerities, self-restraint, piety, fasts, independence;—these are the sources of the knowledge of the soul.

191. Certainly, the knowledge of that soul should be sought after in all the *áśramas* (orders). The twice-born should hear [its nature expounded by the Upanishads], should meditate [over it], and [finally] have a perception of it.

192. Those twice-borns who, possessed of pre-eminent piety, betake themselves to the forest, and [there] meditate upon truth, know it.

193. [Having thus known the soul] they are successively transformed into fire, the day, the bright fortnight, the summer solstice, the world of the Immortals, the sun, and lightning.

194. Then the Great Spiritual Being comes forth to receive them, and makes them inhabitants of the world of Brahmá. After this they are no longer subject to be born in this world.

195—196. Those men, who have attained the heaven by means of sacrifices, religious austerities, [and] charities, successively become transformed into mists, nights, dark fortnights, the winter solstice, [195]

The region of the manes, the moon, air, showers, water, earth; and are again subjected to mundane existence.[1] [196.]

197. He, who, having reason, does not understand these two ways,[2] becomes a serpent, a butterfly, an insect, or a worm.

198—200. With the feet, with their soles turned upwards and placed on his thighs, the right hand with its palm turned upwards and placed on the left, the face a little lifted up, and breast stiffly held [198],

With the eyes closed, the mind calm, preventing contact between the upper and the lower rows of teeth, with [the tip of] the tongue placed steadily on the palate, the mouth shut, without moving, [199]

Having restrained the senses, seated neither very high nor very low, a man should perform *Práṇáyáma* (suppression of breath) twice or thrice [200].

201. Having done this, he should meditate on that Almighty Being who is seated in the heart like a light, and reflect on the soul by performing *dháraṇá* (suppression of breath for the period of three *Práṇayámas*).

202—203. Capability of becoming invisible, remembrance [of things seen in a former life], amiableness, perception [of distant objects], capacity of hearing [sounds produced at a great distance], capacity of leaving one's own body and entering into that of another, [202]

[1] See Bhagavadgíta, ch. viii., 23—25. [2] Of obtaining higher existence: Vij.

Capacity of creating objects at pleasure—these are signs of the attainment of *Yoga*. When a man dies after becoming accomplished in *Yoga*, he becomes entitled to immortality [203].

204. Or a man can obtain the highest object of human existence, by studying the Vedas, abstaining from all prohibited actions, dwelling in a forest, subsisting on unsolicited alms, and by feeding temperately.

205. Even a householder, who has acquired his fortune honestly, who diligently pursues the knowledge [of the Highest Principle], who is hospitable to guests, who worships his departed ancestors periodically, and who speaks the truth, can obtain the final emancipation.[1]

206. Great sinners come into existence in this world, after they have undergone [confinements into] frightful hells due to their great sins.

207. There is no doubt that the slayer of a Bráhmaṇa comes into existence, as a deer, a dog, a hog, and a camel; and that a drunkard is born as an ass, a *Pulkasa* (*chândâla* of the lowest tribe), or a *Veṇa* (one of a certain mixed caste).

208. A robber of gold comes into existence as a worm, an insect, and a butterfly; and one who violates the bed of his religious preceptor, comes into existence successively as grass, a bush, and a creeper.

209. One who slays a Bráhmaṇa shall become consumptive. A drunkard shall have discoloured teeth. One who steals gold shall have ugly nails. One who violates the bed of his religious preceptor shall have diseased skin.

210. He who lives with any of these sinners, shall contract the peculiar defects of the sinner [associated with]. One who steals cooked food shall suffer from indigestion. He who steals books shall become dumb.

211. He who adulterates corn shall have redundant limbs. A slanderer shall have a stinking nose. One who steals oil shall become a worm called *Tailapáyin*; one who falsely accuses [the good] shall have a stinking mouth.

212. By seducing the wife of another, and by robbing a Bráhmaṇa of his wealth, a man shall become a Bráhmaṇical fiend and live in a forest, or in a region destitute of water.

213. He who steals another's jewels, shall become an animal of a low order. He who steals vegetables, consisting chiefly of leaves, shall become a peaock. He who steals fragrant substances, shall become a musk-rat.

214—215. The stealer of corn shall become a mouse; that of a vehicle, a camel; that of fruits, a monkey; that of water, a duck; that of milk, a crow; that of articles of household use, a wasp; [214]

[1] Compare Manu ch. vi., vv. 33—96, and ch. xii., vv. 1—104, and 118—125.

That of honey [shall become] a firefly; that of meat, a swan; that of a cow, a lizard; that of fire, a crane; that of cloth, one affected with white leprosy; that of a juice, a dog; and that of salt, a *chírin* (an insect that cries aloud). [215.]

216. This has been stated by me in respect of theft only as illustrations. Just as there are [various] kinds of objects [stolen], so there are [various] kinds of animals.[1]

217. Having suffered the due consequences of their actions, and then having passed through the existences of lower animals, [the sinners] are then born as the most degraded of mankind, having defects and plunged in wretchedness.

218. Afterwards freed from all sins, they are born in high families, where they enjoy pleasures, and become accomplished in arts and sciences, and possessed of wealth.

219. By omitting to do that which is ordained, by doing that which is prohibited, and by leaving the senses unrestrained, man incurs his fall.

220. Therefore he should here perform penance for the sake of purity. By this means, his conscience as well as the people become satisfied.

221—224. Those men who do not perform expiatory acts, who take delight in sinful actions, and are destitute of repentance, go to harrowing frightful hells, [viz.,] [221]

*Támisra* (the hell of deep gloom), *Lohaśaṅku* (the hell full of piercing iron pikes), *Mahániraya* (the great hell), *Śálmali* (the hell where sinners are tormented with the thorns of silk-cotton trees), *Raurava* (the dreadful hell), *Kuḍmala*, *Púti-mṛittika* (the hell full of bad-smelling dust), *Kálasutràka* [222]

*Saṅghàta* (the hell full of mucus), *Lohitoda* (the hell full of blood), *Savisha* (the hell full of poison), *Sampratápana* (the hell full of piercing rocks), *Mahánaraka* (the great infernal region), *Kákola* (the hell full of venomous snakes), *Sanjîvana*, *Mahápatha*, [223]

*Avíchi*, *Andhatâmisra* (the hell full of dark gloom), *Kumbhípaka* (the hell where sinners are baked like earthen vessels), *Asipatravana* the hell full of naked swords), and *Tápana* (the hell full of scorching heat). [224.]

225. Degraded men, who labouring under the consequences of the primary and the secondary sins, do not perform expiatory rites, go to [these hells].

---

[1] The meaning is that according to the nature of the object stolen, the thief is born in different orders of beings.

226. The sin which a man happens to commit through ignorance can be destroyed by means of expiatory acts. The man, who commits sins knowingly, is [by expiation] allowed only to mix with the people in virtue of certain texts.

227. The slayer of a Bráhmaṇa, a drunkard, a thief, and also he who violates the bed of his religious preceptor;—these are [said to be] great sinners. So is he who lives with them.

228. Talking very disrespectfully of one's own religious preceptors, blaspheming the Vedas, murdering a friend, and forgetting that which one has once learned—these are to be known as [sins] tantamount to the slaying of a Bráhmaṇa.

229. Eating forbidden things, fraud, lying for a [temporal] advantage, kissing the mouth of a menstruous female;—these are equivalent to drinking intoxicating liquors.

230. Unlawful appropriation of a horse, a jewel, a man, a woman, land, a cow, a deposit—all these are equivalent to stealing gold.

231. [Illicit intercourse] with friends' wives, respectable maidens, one's own sisters, low-caste females, females of the same *Gotra* (family) and daughters-in-law;—[these are] said to be equivalent to violating the bed of one's own religious preceptor.

232—233. He who keeps illicit intercourse with the sister of his father, the sister of his mother, the wife of his mother's brother, his daughter-in-law, his step-mother, his sister, the daughter of his family priest, [232]

The wife of his preceptor, or his own daughter, is [like] the violator of his religious preceptor's bed. In spite of the willingness on the part of these women, his organ of generation should be cut off, and he should be beheaded [233].

234—242. Killing a cow, non-initiation with the Veda at proper time, theft, non-repayment of debts, omission to keep the sacred fires, sale of forbidden articles, the marriage of a younger brother before the elder, [234]

Learning the Vedas from a paid tutor, teaching the Vedas for payment, adultery, the non-marriage of the elder brother while the younger brother is married, usury, making salt, [235]

Killing a woman, or a Śúdra, or a Vaiśya, or a Kshatriya, subsisting on condemned wealth, disbelief in the existence of God, violation of celibacy [by a student], as well as selling one's own sons, [236]

Theft of corn, lead, beasts, sacrificing for those who are not entitled to perform a sacrifice, abandoning the father or the mother or sons, selling a tank or a garden, [237]

Polluting a virgin, sacrificing for one who is married before his elder brother, giving one's daughter in marriage to the younger before the elder brother is married, fraud, violating the vows, [238]

An act [viz., cooking food] for one's self, intercourse with one's own wife addicted to drinking, giving up the study of the Vedas and the worship of the sacred fires, abandoning one's own sons and kinsmen, [239]

Cutting down trees[1] for fuel, subsisting by subjecting one's wife to prostitution or by butchery or by using herbs as charms, manufacturing instruments intended to kill animals, addiction to vices, selling one's self, [240]

Serving a Śúdra, friendship with a sordid fellow, serving a man sprung from degraded parents, living outside [any of the four] orders, fattening on food charitably supplied by others, [241]

Studying the treatises composed by atheists, superintendence over mines, selling one's own wife;—every one of these is a secondary sin. [242.]

243. The slayer of a Bráhmaṇa is purified by carrying the human skull[2] as a flag, subsisting on alms, proclaiming his guilt, and by moderation in eating for twelve years.

244. Or he can attain purity by saving one Bráhmaṇa or twelve cows, or by [partaking in] the ablution-ceremony at the end of the horse sacrifice.

245. He, who has killed a Bráhmaṇa, can become purified by relieving a Bráhmaṇa or a cow seen on the road, as affected with a chronic and troublesome disease.

246. Or he becomes purified by recovering the stolen property of a Bráhmaṇa, or by being killed or wounded by weapons, though not to death, in that attempt.

247. Or for the sake of purity, he may make a sacrifice of [every part of] his body, beginning with the hair and ending with the marrow; citing in order the hymn [beginning with] *Lomabhyah svâhá* and others that immediately follow.

248. Or he can become purified by dying in the midst of a battle, after being hit at [by arrows, &c.]; or tormented with wounds, although not actually killed.

249. Or he can become purified, if he lives in a forest, practising temperance with regard to eating, and there thrice reads in low voice the texts of the Vedas; or if he travels round the river Sarasvati and every branch of it, living abstemiously during the travel.

[1] A green tree is not to be cut simply for firewood: Vij.

[2] On the top of a stick: Vij.

250. Or he can attain purity by conferring, as a charity, a sufficient sum of money, on a deserving Bráhmaṇa. The receiver of such a gift should, for the sake of his own purification, offer a sacrifice to god Vaiśvánara.

251. He, who has killed a Kshatriya or a Vaiśya engaged in a sacrificial ceremony, should perform those expiatory acts which are prescribed for the slayer of a Bráhmaṇa. He, who has destroyed an embryo, ought to perform penance according to the caste [of the embryo]. The slayer of a woman in her courses should perform penance in a similar manner.

252. A man ought to perform penance, even for a murder unsuccessfully attempted. The penance for [murdering] a Bráhmaṇa performing sacrifice is double [of that ordained for the murder of a Bráhmaṇa generally].[1]

## DRINKING.

253. The drunkard attains purity by death, caused by drinking red-hot wine, water, clarified butter, urine of a cow, or milk.

254. Clad in clothes made of hair, and wearing matted hair, a drunkard may perform that penance which is ordained in the case of the murder of a Bráhmaṇa; or for three years, he may subsist, at night, on oil-cake or fragments of grain.

255. Having drunk, through ignorance, wine, semen, excrements or urine, a man of any of the three orders of the twice-born, ought again to undergo the ceremonies.

256. A Bráhmaṇa female who drinks liquor, shall not go to that celestial region of her husband; but she will be born again as a bitch, a female vulture, or a sow.[2]

## THEFT OF GOLD.

257. A Bráhmaṇa, who has stolen gold, should confess his crime to the king and offer him a club. When beaten [with the club] or discharged by the king, he will be purified.

258. He may be purified without confessing [his crime] to the king by performing the penance ordained for a drunkard, or distributing in charity as much gold as will weigh against himself, or will satisfy a Bráhmaṇa.[3]

## VIOLATION OF THE PRECEPTOR'S BED.

259. He, who has violated the bed of his religious preceptor, should [for the sake of purification] lie on a hot bed made of iron, with the

[1] Comp. Manu ch. xi., vv. 72—87. [2] Compare Manu ch. xi., vv. 90—98.
[3] Comp. Manu ch. xi., vv. 98—102.

iron image of a woman; or should sever his testicles, take them in hand, and cast his body in the south-west;

260. Or for three years should practise *Kṛichchhras* sacred to god Prajápati; or for three months should practise *chándráyaṇas*, and read the texts of the Vedas.[1]

---

## PENANCE FOR INTERCOURSE WITH A SINNER.

261. If one were to live with [any of] these [sinners] for one year, he would become like them. One may marry a daughter of [any one of] these sinners, only when she has observed fasts [for purification], and is destitute of anything [derived from her parents].

262. Having killed any *Avakṛishṭa* (one of low birth), a man should practise *Chándráyaṇa*. Even a Śúdra will thus be purified in time, unauthorised as he is [to perform penances by sacred rites].[2]

---

## SECONDARY SINS.

263—264. The killer of a cow shall be purified; if he lives, for one month, on the five products of the cow, abstains from sexual intercourse, sleeps in a cow-pen, follows a cow, and [at the end of the month] gives a cow (in charity); [263]

Or if he diligently practises a *Kṛichchhra*, or an *Atikṛichchhra*; or having fasted three days gives ten cows and one bull in charity. [264.]

265. Purification from secondary sins is attainable in this manner, or by means of a *Chándráyaṇa*, or by living on water for one month, or by a *paráka* (fasting for 12 days).

266. In the case of the murder of a Kshatriya, the [guilty] man should give [in charity] one thousand cows and one bull; or should perform penance, as ordained in the case of the murder of a Bráhmaṇa, for three years.

267. The slayer of a Vaiśya should perform such a penance for one year, or give one hundred cows. The slayer of a Śúdra should perform such a penance for six months, or give ten cows.

268. Having killed misbehaving women belonging to the Bráhmaṇa, Vaiśya, Kshatriya or Śúdra classes, a man should, for the sake of purification, give [in charity] a leather bag, a cow, a goat, or a sheep respectively.

269. Having killed a woman not greatly misbehaving, a man should perform penance as prescribed in the case of the murder of a Śúdra.

---

[1] Comp. Manu. ch. xi., vv. 102—106. [2] Comp. Manu ch. xi., vv. 179—189.

Having killed one thousand animals [of inferior kind], having bones, or as many boneless animals as would fill a cart, a man should perform similar penance.

270. Having killed a cat, a lizard, an ichneumon, a frog, or a bird, a man should live for three days on milk, or perform one-fourth of the [*Prájápatya*] *kṛichchhra* penance.

271. In the case of the slaying of an elephant, five blue bulls should be given in charity. In the case of the slaying of a parrot, a calf, two years old, should be given. In the case of the slaying of an ass, a goat, or a sheep, one bull should be given. In the case of the slaying of a *Krauñcha*, a calf three years old should be given.

272. Having killed a flamingo, a vulture, a monkey, a tiger, an aquatic bird, a land-bird, a peacock, or a cock, a man should give one cow. Having killed a herbivorous creature, a man should give a calf.

273. In the case of the killing of snakes, an iron stick should be given; of an eunuch, tin and lead should be given; of a wild boar, a jar filled with clarified butter; of a camel, *Guñja* fruits; and of a horse, a [piece of] cloth.

274. In the case of the killing of a *Tittira* bird, one *Droṇa* [measure] of sesamum seed should be given; and of animals such as elephants, he may perform a *Kṛichchhra* penance for each [animal killed], if unable to give the [proper] gifts.

275. In the case of the killing of a creature found in fruits, flowers, food and juices, the guilty person should eat clarified butter. In the case of the killing of [the lowest species of] animals with bones, something of small value should be given in charity. In the case of the killing of boneless animals, *Práṇáyáma* (suppression of breath) [will suffice as a purificatory means].

276. If a man has cut a tree, a thicket, a creeper or a shrub, he should mutter a hundred *Ṛichs* (lines of the Vedas). If a man is guilty of having wantonly cut a medicinal plant, he should one day subsist on milk, and follow a cow.

277. Bitten by a prostitute, a monkey, an ass, a dog, a camel or other beasts, or a crow, a man should perform *Práṇáyáma*, standing in water, and eat clarified butter, before he can be purified.

278. With the hymn [beginning with] *Yanmedya retah* (my semen which today, &c.) a man should consecrate his semen fallen [at a time other than that of a sexual intercourse]; and by means of his ring-finger, should touch the space between his breasts and the space between his eye-brows.

279. Having seen one's own reflexion in water, [a man] should mutter repeatedly this hymn [beginning with] *Mayitejah* (in me light,

&c.) Having seen an unclean thing, having committed indiscretion, or having told a lie, [a man should mutter repeatedly] the *sávitrí*[1] hymn.

280. A celibate twice-born student by cohabiting with a woman, becomes guilty of incontinence. He will be purified by sacrificing an ass to the god Nairṛiti.

281. Having given up for seven nights begging and the worship of sacred fires, though in good health, he should offer two oblations, citing the two hymns, [beginning with] *Kámávakína*, &c.

282. Then he should stand [near the sacred fires], citing the hymn *Samásinchatu* (may he sprinkle me, &c.) If he drink honey and eat meat, he should undergo a *Kṛichchhra* and perform other vows.

283. If one has displeased his religious preceptor, he will be purified by doing something to please the preceptor. A religious preceptor should perform three *Kṛichchhras*, if a student of his sent by him [on an errand] should die.

284. A man incurs no sin if, while doing good to a Bráhmaṇa, the latter dies; similarly if he causes pain to cows and bulls, while administering medicine to them or branding them.

285. He, who truly describes another's sins incurs equal sin; he who falsely accuses another incurs twice the sin uttered and all the sins of the accused [in addition].

286. He, who falsely charges another with a primary or a secondary sin, should for a month subsist on water, perform low recitations, and restrain his senses.

287. A man, accused falsely, should perform a *Kṛichchhra*, or offer an oblation of boiled rice flour to the god Agni, or a sacrifice of a goat to god Váyu.

288. He, who, without being authorised, cohabits with his brother's wife, should perform a *chándráyaṇa*. He, who cohabits with his wife while in her monthly courses, is purified by drinking clarified butter at the end of three nights.

289. He, who has performed a sacrifice for a degraded twice-born, as well as he who has violated his marriage vow, should perform three *Kṛichchhras*. He who has polluted the Vedas, as well as he who has abandoned one seeking his shelter, should live for one year on barley.

290. A man is purified from sin arising from the acceptance of a gift from an unworthy man, if he, for one month, lives in a cowpen, [abstains from sexual intercourse], subsists on milk, [and] devotes himself to the muttering of the *Gáyatrí*.[2]

[1] The *Gáyatri*.

[2] Comp. Manu ch. xi., vv. 108—117.

## MISCELLANEOUS.

291. Having travelled in a carriage drawn by asses or camels, having bathed or eaten while naked, or having cohabited with one's wife in day time, [a man shall be purified] by bathing and performing Práṇáyáma while standing in water.

292. Having braved and menaced one's religious preceptor, or having vanquished a Bráhmaṇa in a dispute, or having tied him with a cloth, a man should instantly beg pardon [of the injured party], and fast for one day.

293. In the case of the raising of a stick against a Bráhmaṇa, a *Kṛichchhra*, and of throwing down [a Bráhmaṇa], an *Ati-Kṛichchhra* [is ordained as a penance]. Where blood is drawn, one *Kṛichchhra* and one *Ati-Kṛichchhra*, and where blood has issued [but not fallen down] one *Kṛichchhra* [is ordained].

294. In a case, for which no expiatory rite is provided, a penance should be prescribed, after having diligently ascertained the place and the time,[1] the age and the capacity[2] and the sin.

---

## THE ABANDONMENT OF THE DEGRADED.

295. The kinsmen of [a man] degraded from his class, should carry an earthen jar placed on the head of a female slave out of the town, and empty it there, and also treat him as an outcaste in all their transactions.

296. If after having undergone the [necessary] expiatory rites, he comes among them; they should empty a fresh earthen jar. Nor should they reproach him; but should by all means live with him.

297. This very ceremony is ordained in the case of degraded women. They should be given dwelling-room in the vicinity of the house, provided with food and clothing and be guarded.

298. Cohabiting with a man of a lower class, causing abortion, killing the husband;—these are undoubtedly [among the] special causes of the degradation of women.

299. A man should never live with those [men] who have killed persons seeking their protection, or children, or women, and also with ungrateful men; even after they have undergone the [necessary] penance.

---

[1] Where and when the sin was committed: Vij.

[2] Of the sinner: Vij.

300. After the earthen jar is emptied [on restoration to his caste], a man in the midst of his kinsmen should present barley corn to cows. If the man is first respected by the cows, then he deserves respect [from his kinsmen].

301. He whose sin is known, should perform a penance approved of by an assembly.

---

## SECRET EXPIATION.

He, whose sin is not known, should perform a penance in private.

302. The killer of a Bráhmaṇa shall be purified by fasting for three nights; by muttering repeatedly [the hymn called] *Aghamarshaṇa*, while standing in water, and by giving in charity a cow yielding abundant milk.

303. Or [for the sake of purification], [the man], subsisting one day on the air and standing in water, may offer forty libations of clarified butter, citing the hymn [beginning with] *Lomabhyah svâhá*.

304. [A drunkard will become] pure by fasting for three nights, and offering a sacrifice of clarified butter, citing the *Kúshmáṇḍa Ṛichs*. A Bráhmaṇa, who has stolen gold, [shall be purified] if he mutters repeatedly [the collection of hymns called] *Rudra* standing in water.

305. He, who has violated the bed of his religious preceptor, is purified by muttering repeatedly [the collection of hymns beginning with] *Sahasra śírshá* (thousand headed, &c.). [Each of] these [three sinners] should give separately at the end of the penance a cow yielding abundant milk.

306. For averting the consequences of secondary sins, for which no penance is provided, and of [all other] sins, a sinner ought to perform a *Práṇáyáma* a hundred times.

307. Having swallowed semen, evacuations, or urine, an excellent Bráhmaṇa should drink the holy juice of *soma* consecrated by *oṅkáras*.

308. All the sins, that may have been committed, unconsciously, at night or by day, shall be destroyed by performing the three *sandhyas*.

309. Muttering repeatedly the *śukriyáraṇyaka*, and especially the *Gáyatrí* hymn, and also reciting *Rudra* eleven times—these are surely calculated to destroy all sins.

310. Whenever a twice born-thinks himself affected [with a sin], he should sacrifice sesamum seed with the *Gáyatrí*, and bestow gifts.

311. In this world even those sins which result from the gravest crimes, do not touch him who is devoted to the study of the Vedas, who is forgiving, and who is absorbed in the performance of great sacrifices.

312. A man can be purified from all sins except that of killing a Bráhmaṇa, by subsisting on the air, standing during the day, passing the night in water, staring at the sun, and muttering the *gáyatrí* a thousand times.[1]

---

## DEFINITIONS OF PENANCES.

313. Religious celibacy, compassion, forgiveness, charity, veracity, uprightness, abstaining from killing animals, abstaining from theft, sweet words, controlling the senses,—these are denominated to be *yama* (restraints).

314. Ablutions, religious silence, fasts, sacrifices, the study of the Vedas, controlling the passion of love, serving the religious preceptor, purity, abstaining from anger and vigilance,—these are termed the *niyamas* (observances).

315. When a man lives on the urine and dung of a cow, milk, curd, ghee, and water with *kuśa* grass steeped into it, and the next day observes a fast;—he is said to practise the austerity termed *Sántapana.*

316. When a man performs a *Sántapana* for six days, subsisting each day on one of the aforesaid articles, and fasting on the seventh day: this austerity extending over seven days, is said to be a *Mahá-sántapana.*

317. A *parṇakṛichchhra* (leaf penance) is said to consist in drinking the decoction of the following in their order:—viz., the leaves of *Palásá, Udumbara,* lotus, *Bilva,* and *kuśa* grass.

318. A *tapta kṛichchhra* (hot penance) is said to consist in drinking every day one of these things, in their order, viz.:—hot milk, hot ghee and hot water, and fasting one night.

319. A *pádakṛichchhra* (quarter penance) is said to consist either in eating once a day or once in the evening, or [living] without begging or fasting.

320. This [quarter penance], in any manner repeated thrice, is said to constitute a *Prájápatya* penance. An *Atikṛichchhra* is this Prájápatya-penance, performed while living on a scotticeful of food.

321. A *kṛichchhrátikṛichchhra* is said to consist in subsisting on milk for twenty-one days. A *Paráka* is said to consist in fasting for twelve days.

---

[1] Comp. Manu. ch. xi., vv. 257—265.

322. A *saumya-kṛichchhra* (mild) penance is said to consist in eating every day one of these things in their order, viz., oilcake, the water of boiled rice, buttermilk, water, and barley-meal; and in [afterwards] fasting for one night.

323. A *Tulápurusha* penance is to be known to consist in eating the above-mentioned articles each for three nights in their order, and extends over fifteen days.

324. That man is said to be practising a *chándráyaṇa*, who eats morsels of food as large as a peacock's egg, increasing the number of morsels by one each day during the bright fortnight, and similarly decreasing them in the dark fortnight.

325. That a man should eat anyhow, [not more than] two hundred and forty morsels of food in one month, is another form of *chándráyaṇa*.

326. When a man has been practising a *kṛichchhra* as well as a *chándráyaṇa*, he should regularly bathe thrice a day, mutter holy hymns, and consecrate his morsels with the *Gáyatṛi*.

327. In the case of sins not noticed, purification is attainable by means of a *chándráyaṇa*. He, who practises it disinterestedly, will live [after death] in the same regions as the moon.

328. He, who, desiring greatness, performs a *kṛichchhra*, will obtain great wealth. He who performs a *kṛichchhra* attentively, will obtain a fruit similar to that of a great sacrifice.

---

329. Having heard these duties taught by Yájñavalkya, the sages thus addressed that magnanimous pre-eminent philosopher of unbounded splendour :—

330. "Those, who will diligently study this Dharmaśástra, will go to heaven after having acquired fame in this world.

331. "He who is desirous of learning, will acquire learning. He who is desirous of wealth will acquire wealth. In the same manner, he who is desirous of a long life will have long life. He who is desirous of glory will acquire great glory.

332. "There is no doubt that he, who will read at least three couplets from this work at a *śráddha* ceremony, will eternally gratify his manes.

333. "By studying this work a Bráhmaṇa will obtain respectability, a Kshatriya will become victorious, and a Vaiśya will become rich in corn and money.

334. "The learned man, who, on the last day of every fortnight, reads it to the twice-born, will attain the merit derivable from [the performance of] a sacrifice. May your Holiness sanction this."

335. With his heart delighted at hearing the above said by the sages, Yájñavalkya also, bowing to the Self-existent Being, said "Be it so."

# APPENDIX.

## I.

ANALYSIS OF EIGHTEEN SMṚITIS published by Jibánanda Vidyáságara, B.A. Calcutta: A.C. 1876.

In introducing this portion of the Appendix I must say a few words. In going over the field of Smṛiti literature, I have not been able to find any guides or land-marks. Many Smṛitis as they are now quoted by the authors of digests are apparently lost in a separate form. Others again are mere fragments from other works which it is not easy to identify. Some are extracts from larger works now lost. A few seem to be clearly sectarian works of very late origin. On the number and age of the Smṛitis in general, enough has been said in the Introduction. In the present Appendix I have attempted a brief analysis of eighteen out of the twenty named in Yájñavalkya (I. 45), and from which that Smṛiti has drawn largely in its pages. The only two omitted are Manu and Yájñavalkya, and for obvious reasons. Manu has been already translated and commented upon. Some remarks on Manu occur in the Preface. To give my own analysis of Manu as made by the light of other Smṛitis and the Puráṇas would have increased the size of the work beyond the contemplated limits. Yájñavalkya is translated in the body of this work, and an analysis of some of its principal topics with remarks has been given in the Introduction. For the analysis of the remaining eighteen Smṛitis, the Calcutta edition of Paṇdita Jibánanda has been used; but other collections have also been drawn upon, so far as these eighteen Smṛitis are concerned. These will be designated by the following marks:—

*A*—Calcutta collection above mentioned.
*B*—Benares collection lithographed in Samvat 1923.
*C*—Collection of Smṛitis in the Bombay University Library (MSS.)
*D*—My own private collection (MSS).

### *Atri.*

Three works named Laghvatrisamhitá, Atrisamhitá, and Vṛiddhátrisamhitá appear under the name of Atri.

I. Laghvatrisamhitá or the smaller Atri (A) consists of 5 *adhyáyas* or chapters and 134 verses in the Anushṭubh metre; refers to *Áchára* (ritual) and *Práyaschitta* (penance) alone, as is indeed indi-

cated by the second verse,[1] the questions in which as addressed to Atri have elicited the present Smriti. It has two prose passages in the fourth chapter; and has two couplets in the Indravajrá metre in the third chapter. It refers to Manu in the second and fifth chapters (pp. 3 and 8), has at its end a dialogue between Indra and Brihaspati, which appears properly to belong to the Smriti of Brihaspati (see p. 644), and ought to have no place here.

*Remarks.*—The absence of the usual *Phalaśruti* verses, or verses which state the rewards for studying the work, would go to show that the present piece is styled Laghvatri in the sense of an extract from Atri on a particular topic, and not in the sense of an abridgment of the entire law of Atri. A comparison of the subjects proposed to be discussed by this and the Atrisamhitá that follows (p. 1 vv. 2, 3 and p. 13 vv. 3—5) confirms this view.

II. Atrisamhitá (A, B) is wholly metrical; is not divided into chapters; has 398 verses; refers to ritual and penance alone; and alludes to Śátátapa (p. 35 vv. 261, 270), and Śaṅkha (p. 35 v. 262; p. 36 v. 284). As there are several verses in Manu ending in इत्येवं मनुरब्रवीत् (so said Manu); so there are some verses in this work ending in भगवानत्रिरब्रवीत् (so said his holiness Atri), (see p. 21 v. 98; p. 26 v. 163; p. 27 v. 172; p. 42 vv. 350, 351).[2]

Some definitions of penances given here exactly agree with those of Yájñavalkya (see p. 23 v. 118 and Yáj. ch. iii. v. 316; p. 23 v. 126 and Yáj. ch. iii. v. 319; p. 23 v. 217, and Yáj. ch. iii. v. 321; and p. 24 v. 129, and Yáj. ch. iii. v. 323), and others are paraphrases with slight variations (see p. 22 v. 116, and Yáj. ch. iii. v. 317; p. 23 v. 117, and Yáj. ch. iii. v. 315; p. 23 v. 127, and Yáj. ch. iii. v. 322). The metre is mostly Anushṭubh, but there are some Upajáti verses (see pp. 15, 32, and 45). Quotations from ancient authors are prefaced by अत्राप्युदाहरन्ति, which means 'In connection with this it is said,' (see pp. 26, 30).

The Atri Samhitá as it is found in C and D agrees with neither of the abovementioned works in Atri's name. It is divided into nine

---

[1] It runs thus:—

भगवन् केन दानेन जपेन नियमेन च। शुध्यन्ते पातकैर्युक्तास्तद्ब्रूहि त्वं महामुने॥

[2] Prof. Monier Williams regards the circumstance of the author's name being mentioned in a work which professedly is his production, as indicative of the work being a compilation from more than one source. (See his note on p. 216 of Indian Wisdom, second edition.) I think that no such conclusion can be based upon the said circumstance by itself. The mention of the author's name in certain verses appears to me to be made merely for the exigencies of metre, and therefore in no way significant. If, however, any inference is to be drawn from that fact, it can be no other than that the work was a compilation of the Institutes of Atri by a pupil or a descendant of Atri, and not by Atri himself.

chapters, and has several prose passages. Its first chapter has ten verses, the second has thirteen, the third has fifteen, the fourth is prose, the fifth has sixteen verses, the sixth, seventh and eighth are prose, and the ninth has seven verses. It refers to ritual and penance alone. The absence of an allusion to any previous author, as well as the style of mixed prose and verse, incline me to regard this as the genuine *Atri* Smṛiti, and its namesake that appears in the Calcutta compilation, as a much later production passed under Atri's name. My grounds for considering the Atri Smṛiti of Calcutta as a later work are:— I.—That it is confessedly a compilation (see p. 13 vv. 3 and 4), as is confirmed by allusions to Śátátapa and Śaṅkha, and by quotations from nameless authors with the preface of अत्राप्युदाहरन्ति. II.—There are unacknowledged verses borrowed from Yájñavalkya as shown above. III.—It has occasionally metres other than Anushṭubh, which is the usual metre of all ancient works. IV.—There are indications to show that the Bráhmaṇa had at the time of that work descended to occupations like trading, agriculture, painting, the profession of bards, &c. (see p. 44 vv. 375, 376; p. 45 vv. 384, 385). V.—Allusion is made to the Bhágavata Sampradáya (see p. 45 v. 381). VI.—Certain Śúdras are declared as unfit to touch (see p. 37 v. 285). Such a prohibition does not occur either in Manu or Yájñavalkya.

All these passages, which to my mind indicate a later date of the production, do not occur in the Atri of the C and D collections.

III. Vṛiddhátri Samhitá (A) is almost the same as Laghu Atri. The opening verse in the two is different; and the dialogue between Indra and Bṛihaspati, which concludes the Laghu Atri, is omitted here. A few verses have been added, and some omitted, so that the number of verses is on the whole less by one than that in the Laghu Atri, viz., 133. A comparison of the two leaves no doubt that, though differently named, Vṛiddha Atri as printed is nothing more than Laghu Atri, with differences not more in number or importance than are frequently seen between two manuscripts of the same work from two different parts of the country.

*General Remarks.*

There is one Atri who is the reputed seer of the fifth Maṇḍala of the Ṛig-veda. Probably he may be the same as the one who was the son of Brahmá, and is worshipped as one of the *Saptarshi* (seven sages). It is impossible to regard the present Smṛiti as a work of that individual; for, even in Vedic times, Atri is often mentioned as a very ancient sage. It is likely the production of some one who was either a descendant of Atri or a follower of his doctrines.

Atri is now worshipped as one of the seven sages with the recitation of *Rich* 4, Súkta 78, Maṇḍala V (Ṛig-veda), and his wife Anasúyá

is mentioned in the Parisishṭa to Ashṭaka viii. Adhyáya iii. (not found in Prof. Max Müller's edition of the Ṛig-veda). There are numerous allusions to Atri in the Ṛig-veda (see Prof. Max Müller's index to his Ṛig-veda in vol. V). Atri appears in the Áśvaláyana Śrauta Sútra Parisishṭa (p. 891) and also in his Gṛihya Sútra (p. 163) iii., iv., 2. In the Yajurveda he appears in the Taittiríya Samhitá Káṇḍa vii. Adhyáya i. Anuváka 8.

In the Puranic history, Atri appears as one of the ten sons of Brahmá created out of the mind (see Bhágavata skanda iii. ch. xii. vv. 22—24). His wife's name was Anasúyá, and he was the father of Datta, Durvásas and Soma. According to Matsya Puráṇa ch. 194, Atri along with the remaining nine *Mánasaputras* was destroyed by a curse of Maháḍeva, and was again created in the present Manvantara. Here too his wife's name was Anasúyá, but his sons were four instead of three. Ráma in his exile visited the hermitage of Atri before entering the Daṇḍaka forest (see Rámáyaṇa Ayodhyá Káṇḍa chapters 117 to 119, and Adhyátma Rámáyaṇa, Ayodhyá Káṇḍa ch. ix. v. 79). On the return of Ráma, Atri was one of those sages who repaired to Ayodhyá to congratulate Ráma on his restoration to his throne (see Rámáyaṇa Uttara Káṇḍa ch. i. v. 3). There is another Atri in the Mahábhárata Vanaparva ch. 185, who went to a descendant of king Vena of the solar dynasty for requesting alms, and had a dispute with sage Gautama of that court. The Devíbhágavata states that Atri is the nineteenth Vyása or compiler and arranger of the Vedas in the present Manvantara (see Skanda i. ch. iv.).

Atri's son Datta, who has been mentioned before, is now worshipped as representing in one individual the present Hindu trinity of Vishṇu, Śiva, and Brahmá.

---

*Vishṇu.*

Three works appear in Vishṇu's name, viz., Vishṇu Smṛiti, Vaishṇava Dharmaśástra, and Laghu Vishṇu Smṛiti.

I. Vishṇu Smṛiti (A) is evidently a poem that ought to have no place in the Smṛiti literature. It is what is well known by the name of Anusmṛiti, and forms a part of the *Pancharatná Gítá*. Probably the occurrence of the word Smṛiti in the name of the work misled the publisher, and made him think it to be a Smṛiti work.

It is metrical; contains 114 verses, all in the Anushṭubh metre save a few at the end; and is a dialogue between the grandson of Dharmarája and Śaunaka. An earlier enquiry on the same subject by Dharmarája of Bhíshma, and a still earlier one by Nárada of Vishṇu, are noticed. The whole piece is written in reply to the questions contained

in the second and third verses.[1] As the nature of the enquiry shows, the work has nothing to do with either ritual, civil law, or penance.

*Remarks.*—This Anusmṛiti is not found in the Bombay edition of the Mahábhárata, although its inclusion in the Pancharatnî Gítá would indicate that it was a part thereof. It is worthy of note that while the Mahábhárata makes no allusions to the juvenile exploits of Krishṇa before he joined the Páṇḍavas, the Anusmṛiti refers to Krishṇa's killing of Kamsa and Cháṇúra (see p. 63 vv. 39, 40). The vocatives द्विजश्रेष्ठ (oh best of the twice-born) and मुनिप्रवीर (oh best of sages) are inexplicable as addressed to Dharmarája by Bhíshma, save by supposing that those verses belonging originally to another work have been adapted and fitted into the Anusmṛiti.

II. The Vaishṇava Dharmaśástra (A) is divided into 100 *Adhyáyas*. All chapters are mixed prose and verse, except the first and the last two, which are entirely metrical; a circumstance which raises a suspicion that the real Smṛiti work, consisting of the intermediate 97 chapters, is fitted up with an opening and a concluding chapter, which formed a part of some Puráṇic story.

The following is a brief analysis of the Smṛiti:—

Ch. I.—The earth on being saved from dissolution by Vishṇu in his incarnation of Varáha, found everything in confusion, and being anxious to know her future sought out Kaśyapa, and enquired as to whose protection she should resort in that exigency. Being referred by him to Vishṇu, the protector of the universe, she goes to him, and asks what would constitute her safety. Vishṇu replies that she should look up for support to virtuous sages. The earth's next enquiry is as to what constitute virtue and good conduct, and this paves the way for the present disquisition on *dharmaśástra* by Vishṇu.

Ch. II.—Gives the four classes and their occupations.

Ch. III.—On the duties of a king.

Ch. IV.—On weights and scale of fines; it may be remarked that the latter differs from the one adopted by the Mayúkha (see above p. 156 l. 6).

Ch. V.—On punishments for different offences.

Ch. VI.—On recovery of debts; has a verse exactly similar to Yáj. I. ch. ii. v. 53, is a concise statement of the whole law on the subject in prose.

Ch. VII.—On writings.

[1] The verses run thus:—

सततं किं जपज्जप्यं विबुधः किमनुस्मरन् । मरणे यज्जपज्जप्यं यं च भावमनुस्मरन् ॥ २ ॥
यच्च ध्यात्वा द्विजश्रेष्ठ पुरुषो मृत्युमागतः । परं पदमवाप्नोति तन्मे वद महामुने ॥ ३ ॥

Ch. VIII.—On witnesses. It contains a verse exactly similar to Yáj. ch. ii. v. 79.

Chs. IX. to XIV.—On different kinds of ordeals.

Ch. XV.—Mentions the twelve kinds of sons, the verses in the chapter being exactly similar to Manu ch. ix. vv. 137—139.

Ch. XVI.—On the different mixed classes. It mentions Cháṇḍála among those who are subject to the Smṛiti law.

Chs. XVII., XVIII.—On inheritance and partition. These are meagrely treated, the verses being similar to those in Manu ch. ix. vv. 208—210, and Yáj. ch. ii. vv. 120 and 138.

Ch. XIX.—On funeral obsequies.

Ch. XX.—On the divisions of time, with an exhortation to refrain from lamenting over the dead. It contains extracts from the Bhagavadgítá ch. ii. in the Mahábhárata.

Ch. XXI.—Funeral obsequies continued.

Ch. XXII.—On impurity on account of death.

Ch. XXIII.—On the purification of things.

Ch. XXIV.—On the eight forms of marriage.

Ch. XXV.—On the duties of a wife.

Ch. XXVI.—On the superiority of the senior wife and a wife of the same class. Manu ch. iii., v. 13, disapproving of a Bráhmaṇa's marriage with a Śúdra wife is here quoted, although in ch. xxiv. such a wife is laid down for a Bráhmaṇa by Vishṇu.

Chs. XXVII. to XXIX.—Give the different *Samskáras* or ceremonies, including *Upanayana*, and the duties of a *Brahmachárin*.

Chs. XXX. to XXXIII.—Prescribe general rules of conduct for a householder.

Chs. XXXIV. to XLII.—Give an enumeration of the principal and secondary sins.

Chs. XLIII. to XLV.—Describe the different hells and the consequences of sins in the next life.

Chs. XLVI. to LV.—Prescribe penances for different sins. Ch. li contains a long metrical passage (very likely an extract from some other work) in support of the sacrifice of animals, thus showing that at the date of this Smṛiti the Vedic ordinance of a sacrifice was losing its hold on the minds of the people, and needed the special support of a Smṛiti writer.

Ch. LVI.—Enumerates the particular portions of the Vedas regarded as peculiarly sacred.

Ch. LVII.—Describes the persons from whom gifts should not be accepted.

Chs. LVIII. to LXXII.—Give rules of daily conduct in great detail for a householder.

Chs. LXXIII. to LXXXV.—On *Śráddhas* or oblations to manes.

Ch. LXXXVI. to XCIII.—Describe presents made to Bráhmaṇas and their merits.

Chs. XCIV. to XCVII.—On the duties of a hermit and an ascetic. They contain the anatomy of the human body and the elements of *yoga* philosophy.

Chs. XCVIII. and XCIX.—The earth on hearing the whole Smṛiti praises Vishṇu, and enters into an utterly irrelevant dialogue with Lakshmi, in *Upajáti* metre, by enquiring of the latter as to where she is to be seen.

Ch. C.—Consists only of the verses declaring the merit accruing from the study of this Smṛiti.

*Remarks.*—This is the Smṛiti which has been made the subject of a commentary named Vaijayantí by Nanda Paṇḍita, son of Ráma Paṇḍita Dharmádhikárí, and which is referred to by Nílakanṭha in his Vyavahára Mayúkha. This work is exceptional in claiming a divine origin. Nanda Paṇḍita[1] himself considered this claim as extravagant; for he says the present work must be a reproduction by some *Ṛishi* of what he orally learnt from Vishṇu, as the Uttara Mímámsá of Dvaipáyana was. This explanation of Nanda Paṇḍita only confirms what is apparent on the most cursory perusal that the whole is a mere compilation, which has been ascribed to Vishṇu to magnify its importance. The metrical portion of almost every chapter is a quotation, in most places unacknowledged, and in some few places acknowledged (see pp. 159, 160, 162) as traditional verses under the name of *pitṛigáthá*. There occur a large number of verses that are found in Manu (see pp. 93, 94, 97, 111) and Yájñavalkya (see pp. 86, 89, 95, 99, 112). As regards the relative position of Vishṇu in respect of Manu, it appears to me that a long period must have elapsed after Manu, before the present work appeared, for—I., the limits laid down by Manu for *A'ryávarta* in chapter ii. verse 22[2] had to be made more indefinite in the time of Vishṇu (vide

---

[1] The passage referred to is at the beginning of the commentary, and runs thus :—
इह खलु करु[illegible]गतपोनिधिर्भगवान्नारायणः शेषतल्पात्कल्पादावुत्थाय वाराहं वपुरास्थाय निरवधिजलधि-
मग्नां दन्तल[illegible]सुन्धरामुद्धृत्य स्वभृत्यावदाननिदानजिज्ञासया तयैव पृष्टान्सर्वेष्टान्वर्णाश्रमधर्मान्प्रोवाच। तांश्च
कश्चिद्विप[illegible]रुपश्रोतायन्तयोः सङ्गतिसम्पादनाय स्वनिर्मितया चतुरध्याय्या भगवन्मुखनिर्गतानां
* * * * * *
तद[illegible]ां षण्णवत्यध्यायीं परिपूर्य शतमध्यायान्परिकल्प्य काण्डत्रयेण निबबन्ध। यथा
भग[illegible]निषदो द्वैपायनः।

[2] [illegible]ius :—
[illegible]मुद्रात्तु वै पूर्वादासमुद्रात्तु पश्चिमात्। तयोरेवान्तरं गिर्योरार्यावर्तं विदुर्बुधाः॥

p. 160),[1] probably because the Aryas had then spread over a larger country; II., the lengthy defence of the slaughter of animals in a sacrifice at p. 131 could not have been necessary, unless the Vedic rite of sacrifice enjoined by Manu had begun to be looked upon with disfavor in the interval; III., the minute details of the treatment of the dead by Yama, the Pluto of the Áryas (p. 121), do not all appear in Manu. In regard to his chronological position in reference to Yájñavalkya, the facts that Yájñavalkya is often brief where Vishṇu is verbose, (compare for instance the contents of chapter v. of Vishṇu with the corresponding portions of Yájñavalkya in chapter ii. after the 212th verse, or chapters 73 to 85 of Vishṇu to Yáj. ch. i. vv. 217 to 269), that there is more of systematic arrangement and analysis in the former than in the latter, and that civil law occupies in Vishṇu a subordinate position to ritual, incline me to the opinion that Vishṇu is of an earlier date; although I must add that I do not think they were separated by any considerable length of time. The consideration that leads me to this statement is the almost complete uniformity of details on the different topics treated in the two works (see, for instance, the chapters on the punishment of offences, oblations to the manes, recovery of debts and purifications of things), particularly in respect to the elements of Yoga philosophy, which even in the Vedic literature has been considered to be a later growth. The fact that there are verses common to the two writers affords no clue to determine the question of priority; but considering the style of Vishṇu, which is generally diffuse, it is not unlikely that Yájñavalkya borrowed from Vishṇu what he thought was already concise enough without acknowledging the source; and he did so the more readily because these were probably traditional verses and not the production of Vishṇu, who himself, like Yájñavalkya, was a compiler.

III. Laghu Vishṇu Dharmaśástra (C and D) consists of 109 verses in the Anushṭubh metre, and gives the general duties and ceremonies of the four classes and the four orders.

This same work is mentioned in B as विष्णुप्रोक्तं धर्मशास्त्रं, and is divided into five chapters, which do not interfere with the consecutive numbering of the verses.

*Remarks.*—This work is not an abridgment of the abovenamed Vaishṇava Dharmaśástra, as its name would seem to indicate, for—I., it is ascribed to a Ṛishi Vishṇu, who is described as proficient in the Vedic and Smṛiti lore, and who composed the present work at the request of the sages residing at the town of Kalápa.[2]

[1] The verse runs thus:—
चातुर्वर्ण्यव्यवस्थानं यस्मिन्देशे न विद्यते । स म्लेच्छदेशो विज्ञेय आर्यावर्तस

[2] See the opening verse which runs thus:—
विष्णुमेकाग्रमासीनं श्रुतिस्मृतिविदां वरम् । पप्रच्छुर्मुनयः सर्वे कलापग्रामव

This town of Kalápa appears to have been situated on the northern side of the Himalayas,[1] and is likely the same as is referred to in the Bhâgavata (skandha ix., Adhyáydha 12, v. 6, p 22). II., It does not contain those texts which are attributed to Vishṇu by Nîlakaṇṭha in his Vyavahára Mayúkha. III., In its last line it appears to pretend to be an original work referring the reader in respect of its omissions to other works.[2] IV., It contains a verse which has no counterpart in the large work—Vaishṇava Dharmaśástra, and which enunciates a doctrine not found in any other Smṛiti. This is the last but one verse in the work,[3] and it restricts the fourth order—asceticism (or *Sannyása*) to the Bráhmaṇa class alone, in spite of Manu, who appears to allow it to all the three twice-born classes (see Manu, ch. vi. v. 85, see further Mallinátha's comments on v. 14 of canto viii. of Kalidasa's Raghuvamśa).

---

*Hárita.*

There are three works under the name of Hárita, viz., Laghu Hárita Smṛiti, Vṛiddha Hárita Samhitá, and Hárita Dharmaśástra.

I. Laghu Hárita Smṛiti (A and B) consists of seven chapters, containing 198 verses in all.

Ch. I.—Opens with an enquiry by assembled sages in regard to the duties of different classes and orders and *Yoga* philosophy, and contains Hárita's statement of the duties of a Bráhmaṇa. I may note that the study of Dharmaśástra as distinct from that of the Vedas is particularly enjoined in verse 24 (p. 179). All verses except the last (which is in the *Upajáti*) are in the *Anushṭubh* metre.

Ch. II.—Lays down the duties of the remaining three classes.

Ch. III.—Describes the duties of the first order.

Ch. IV.—On the duties of the second order, namely, that of a householder. It is noteworthy that the duties here laid down are not the peculiar duties of a householder, and are given in Yájñavalkya, under the head of the duties of a Brahmachárin. Maríchi and Sáunaka are referred to in verse 16 (p. 184).

Ch. V.—On the duties of a hermit (*Vanaprasthan*).

Ch. VI.—On the duties of an ascetic (*Sannyásin*).

Ch. VII.—Gives directions in regard to *Yoga* or meditation.

*Remarks.*—This work is evidently an extract from some larger work, which in the style of the Mahábhárata introduces the dialogue between

---

[1] See the Mahábhárata, हिमवन्तमतिक्रम्य कलापग्राममाविशत् ।

[2] The verse runs thus :—

आश्रमानामयं धर्मो मया प्रोक्तः सनातनः । यदत्र विदितं किंचित्तदन्येभ्यो गमिष्यथ ॥

[3] It runs thus :—

आश्रमास्तु त्रयः प्रोक्ता वैश्यराजन्ययोस्तथा । परिव्रज्याश्रमप्राप्तिः ब्राह्मणस्यैव चोदिता ॥

Hárita and other *rishis* or sages by way of illustration in the midst of another narrative.[1] The introductory verses of this and the following larger work of Hárita show that the present work is not an abridgment of the other; for the latter is professedly a dialogue between Ambarisha and Hárita (see page 194). The use of the word Bhárgava for Hárita shows that he was a descendant of Bhrigu (see p. 172 ch. i. v. 5). This work has no portion bearing on the civil law, and has marks of a recent date; for, I.—It is a sectarian work made long after the Smriti period when the schism between the Vaishnavas and Saivas had become marked (see ch. i. vv. 2 and 6; ch. ii. v. 9; ch. vii. vv. 19 and 20, where नारसिंह, विष्णु, and मधुसूदन are referred to with peculiar veneration). II.—There is a difference observable between the definitions of a Bráhmana given by Manu (ch. i. vv. 87—91) and Yájñavalkya (ch. i. vv. 118, 119,) on the one hand, and by Hárita on the other; the former describing him by distinctive occupations, and the latter marking him by his parentage alone.[2] III.—There stricted use of the word *dvija*[3] for a Bráhmana alone marks a process of segregation more developed than in the times of Manu or Yájñavalkya. This is strengthened by v. 11 in ch. ii. on p. 180, which, while assigning to a Súdra the service of the twice-born as his duty, specially directs that that service be that of a Bráhmana.[4]

II. Vriddha Háritá Samhitá (A) consists of eight chapters, in 2,587 verses, all in Anushtubh metre. It is styled in the colophon of each chapter as विशिष्टधर्मशास्त्र.

Ch. I.—King Ambarísha sought instructions of Hárita on the subject of the duties of the different classes, and of the road to final beatitude. Hárita commences by establishing the position of Vishnu as the head of the Hindu pantheon, and inculcates his worship in its different forms.

Ch. II.—Gives the well known Panchasamskárasor five initiatory observances of the Vaishnavas, viz., *Pundradhárana* or the marking the forehead with certain perpendicular streaks; 2, *chakra dhárana* or cicatrization of the body with marks of Vishnu's disc; 3, *Námasamskára* assuming any one of the names of Vishnu; 4, the *Mantra Samskára*, or the ceremony of receiving a mystic *mantra* or formula from the preceptor; 5, *Bimbadarśana*, receiving an idol from the preceptor.

---

[1] See v. 3. ch. i. (p. 172) which runs thus:—
अत्राहं कथयिष्यामि पुरा वृत्तमनुत्तमम् । ऋषिभिः सहसंवादं हारीतस्य महात्मनः

[2] (p. 178) ch. i. v. 15.—ब्राह्मण्यां ब्राह्मणेनैवमुत्पन्नो ब्राह्मणः स्मृतः।

[3] See p. 179 ch. i. vv. 25 and 31 together.

[4] Compare Manu ch. i. v. 91, where no such distinction is made.

Ch. III.—Contains ceremonies for the recitation of certain mystic formulas, in tedious and unmeaning detail; refers to the Rámáyaṇa, and certain incarnations of Vishṇu as Varáha, Vámana, Hayagríva. These deities command special adoration from none in these days except the Vaishṇavas. I may note the fanciful etymology of the term Krishṇa at p. 234. There is one prose passage (see p. 238) and some verses in the *Śardúlavikrídita* metre (see pp. 239 and 243), which is never seen in the earlier works. The *Saptarshis*, or the constellation of seven sages, are given in v. 368 p. 224. Sanaka (p. 227), Káśyapa, Kauśika, Nárada, Válakhilyá (see p. 229) are referred to.

Ch. IV.—Ritual of the worship of Vishṇu; articles requisite or prohibited in a sacrifice (pp. 252, 253); the pure and the mixed classes (p. 256); things fit and unfit to be accepted (pp. 257, 258); the duties of the four classes; punishments for offences (p. 259); the general civil law on the subjects of debts, inheritance, *stridhana*, the different kinds of sons, &c.—these are very meagrely described. Several of the verses on civil law are borrowed from Yájñavalkya (pp. 262—264). Háríta refers the reader to Manu, Kátyáyana, Nárada, and Yájñavalkya for further information on the subject (p. 265). In the last verse[1] Háríta represents himself as having been addressed along with Manu and Nárada by Brahmá.

Ch. V.—Lays down ritual for the daily and occasional worship of Vishṇu. It is an acknowledged reproduction of what was said by Brahmá to Manu, Bhṛigu, Vasishṭha, Maríchi, Daksha, Angiras, Pulaha, Pulastya, Atri (see p. 266). The different forms of Vishṇu are distributed among the different classes for adoration (see p. 281). The sect of Lokáyatikas is referred to (see p. 267), the worship of any deity but Vishṇu is condemned, and among things to be recited by a householder, the Purans sacred to Vishṇu are ranked next after the Vedas. Śrísúkta and Purushasúkta are prescribed for the daily worship (see v. 1271 p. 300).

Ch. VI.—Describes the fairs to be held by village authorities in honor of Vishṇu (p. 314), different sacrifices, and funeral ceremonies (pp. 320 and 321). It is to be remarked that the practice now observed among some Hindu tribes of carrying their dead to the burning ground with music before them is indicated in v. 1530 p. 321. Results of sins (p. 327), the five great sins (p. 328), and the secondary ones and penances for different sins

[1] See the last verse of ch. iv. (pp. 265, 266) which runs thus:—
यदाह भगवान् धाता मनोः स्वायम्भुवस्य च । नारदस्य च मे सम्यक्तदय कथयामि ते ॥

(p. 331) are next mentioned. The definition of a *parshad* or an assembly (v. 1668 p. 333) is next given. Recitation of the Vishṇu-Sahasra-náma or the thousand names of Vishṇu is enjoined (p. 341), and penances to be performed in secret are enumerated (p. 343).

Ch. VII.—On the ritual of the different *Ishṭis* or sacrifices of the Vaishṇavas. Hárita professes to have been initiated into it by Bhṛigu, who learnt it from Vighanas, who in his turn was indebted to Vishṇu for it (see v. 1889 p. 352). While speaking of the *Vaiyúhí* sacrifice, a list of persons who are represented as possessed of prosperity and knowledge, is given with a direction that they should be worshipped in that order. I do not understand the principle of that order. That list contains Hárita himself (p. 358). The twenty-four names of Vishṇu which every twice-born has to repeat before his daily prayers with the different permutations and combinations in the arrangement of the four weapons[1] of Vishṇu in his four hands is given at p. 361. A list of the eminent votaries of Vishṇu is given at p. 369, which contains Hárita, Ambarisha, and almost all the personages of the Rámáyana down to Trijáṭá, one of the female demons guarding on Sítá while in the city of Rávaṇa. There is a quotation from the Bhagavadgítá (p. 378 v. 2216).

Ch. VIII.—Lays down the ritual of the Vishṇu-worship, a strenuous exhortation to follow the Vedas, and attaches the heaviest sanctions to the slightest divergence therefrom (p. 394). In support of it a legend is narrated wherein Śáṇḍilya, a descendant of Kaśyapa, who promulgated a ritual of worship differing from that in the Vedas, was condemned to perdition for a number of years; and had to be born again as Jamadagni to atone for the said conduct of his (pp. 395, 396). The practice of Suttee or self-immolation by a wife on the pile of her deceased husband is referred to (vv. 2432, 2433 pp. 396, 397). Imprecations are pronounced on all those who may not be Vaishṇavas (p. 403).

*Remarks.*—This work too is the modern production of a Vaishṇava for sectarian purposes. It is diffuse in its style, and often mystic in its commandments. The hatred for Śiva and his followers betrayed by this work in numerous places[2] cannot permit an earlier date to be assigned

[1] They are शङ्ख a conch shell, चक्र a disc, गदा a club, and पद्म a lotus.

[2] See for instance verse 73 at p. 200:— रुद्रार्चनं त्रिपुण्ड्रस्य धारणं यत्र दृश्यते। तच्छूद्राणां विधिः प्रोक्तो न द्विजानां कदाचन॥; Verses 937 and 938 at p. 272:—शिवार्चनं त्रिपुण्ड्रं च शूद्राणां तु विधीयते॥ तद्विधानामिदं ये च विप्राः शिवपरायणाः। ते वै देवलका ज्ञेयाः सर्वकर्मबहिष्कृताः॥; and verse 2495 p. 402 वैष्णवः पुरुषो यस्तु शिवब्रह्मादिदैवतान्। प्रणमेतार्चयेद्वापि विष्ठायां जायते कृमिः॥

to this work than the 11th century,[1] when the Vaishṇava sects of Rámánuja and Rámánanda came into existence. The exclusive worship of Vishṇu enjoined (see vv. 2540, 2541 on pp. 405, 406), the stern prohibition of an oblation to the manes on an Ekádaśi or the eleventh lunar day of a fortnight (see v. 2564 at p. 407), the recitation of the Vishṇu *sahasranáma*, or the thousand names of Vishṇu being every day enjoined (see v. 1767 at p. 341), the ritual of Vishṇu worship and Vaishṇava practices of cicatrization and the like in chapter II.—all these mark a date for this composition subsequent to the schism between the followers of Vishṇu and Śiva. Further, the facts that this work is styled Viśishṭa Dharmaśástra,[2] and contains the worship of Vishṇu and Lakshmi, in their various incarnations,[3] together with a sacrifice in honour of *vyúha* or certain forms of Vishṇu (see p. 360); point to the work being the lucubration of a follower of the Rámánujas. The author has indeed spared no pains in attempting to give his work very great antiquity by fathering it on Hárita, and stating that almost all the ancient Ṛishis followed this Vaishṇava Dhamaśástra (see p. 409), and that the doctrines contained in the present work had the sanction of Manu (see v. 2576 pp 408, 409). But Bhṛigu's version of Manu, which is extant, as well as the works of Vasishṭha and the rest, referred to as great Vaishṇavas, do no give the faintest trace of the Vishṇu worship as here inculcated. The author's notions about the unity of time and of action are anything but sound. The work professes to be a dialogue between Ambaríśha and Hárita, and yet both of them are mentioned amongst the reputed Bhágavatas, and are therefore directed to be worshipped along with Vishṇu (see p. 369). Hárita in one place is made the direct addressee of Brahmá,[4] at another he is a pupil of Bhṛigu,[5] and at another still he is a pupil of Manu.[6] And yet the truth is out when Vasishṭha, Bhṛigu and Sanaka are mentioned among the ancient (*purátana*) sages.[7] On

[1] See Wilson's Essays on the Religion of the Hindus, vol. I., p. 17. The date of Rámánuja according to Prof. Goldstücker is the middle of the 12th century A. C. See Literary Remains of Dr. Theodore Goldstücker, vol. I. p. 237.

[2] Mark that the principal doctrine of the Rámánujas is *Viśishṭádvaita*.

[3] See Wilson's Essays on the Religion of the Hindus, vol. I., p. 38.

[4] See the last verse of chapter iv.—

यदाह भगवान् धातुः सोऽपि स्वायम्भुवस्य च । नारदस्य च मे सम्यक् तदद्य कथयामि ते ॥

[5] See the 6th and 7th verses of the VII. chapter—

पूर्वं विधनसे विष्णुः प्रोक्तवान् विधनसा भृगोः । प्रोक्तं ममेरितं तेन भृगुणा दिव्यमुत्तमम् ।

[6] See p. 408—विशिष्टं वैष्णवं धर्मशास्त्रं वेदोपबृंहितम् । विष्वक्सेनाय धात्रे च सम्प्रोक्तं परमात्मना । विष्वक्सेनेन सम्प्रोक्तमेतद्विधनसे पुरा । भृगोः प्रोक्तं विधनसा भृगुणा च महर्षिणा ॥ भृगुणा च मनोः प्रोक्तं मनुना च ममेरितम् ।

Manu is here made a pupil of Bhṛigu!

[7] See the first two verses of the VIII. chapter—

अथ वक्ष्यामि राजेन्द्र विष्णुपूजाविधिं परम् । श्रौतं महर्षिभिः प्रोक्तं वसिष्ठाद्यैः पुरातनैः ॥ वैखानसैश्च भृग्वाद्यैः सनकाद्यैश्च योगिभिः । वैष्णवैर्वेदिकैः पूर्वैर्यथदाचरितं पुरा ॥

the whole the impression left by the work on my mind is that it broaches doctrines which had no existence during the Smṛiti period; and that it is a fair sample of the mischief done by writers of degenerate times either palming their works on old sages or interpolating their own productions into ancient works.

This work has nothing to do with civil law, although it takes some extracts from Yájñavalkya (see p. 265), and refers the reader for the rest to Manu, Yájñavalkya, Kátyáyana and Nárada.

III. Hárita Dharmaśástra (C and D) consists of 111 verses in Anushṭubh metre, and contains ordinances in regard to penances, impurity, debts, succession, oblations to manes, and a few unconnected verses on the subject of alienation. The last verse here is स्थावरं द्विपदं, &c. which is the same as is cited above at page 34 line 7, Part II. and attributed to Nárada: on the authority of Kamalákara (see note p. 34 line 39 Part II).

*Remarks.*—From the abrupt commencement and end of this work it is clear that it is a detached portion of a larger work. There is reason to suppose that this is the genuine Smṛiti of Hárita, for it contains a verse which is attributed by Nílakaṇṭha to Hárita (see above p. 77 l. 7), and is found in this work alone. It must be noted that in all the places where Hárita is cited by Nílakaṇṭha, this is the only place where he appears in metre; in all the other places the citations are in prose (see part I. p. 31, l. 19; p. 34 ll. 9 and 11;[1] p. 35. l. 26). Colebrooke (p. 468 vol. I. Cowell's edition) says that a metrical abridgment of Hárita's treatise in prose is extant. There are no grounds at present to say that the metrical work of Hárita is an abridgment of his prose treatise; for those prose passages of Hárita which have been quoted by Nílakaṇṭha in his Vyavahára Mayúkha are not to be found in the metrical work.

The important verse of Yájñavalkya ch. ii. v. 135, on succession to a sonless separated male, is found here exact to the letter, thus suggesting a hypothesis that this may be a traditional verse which Yáj. borrowed.

A verse cited above at p. 123 l. 8, which is ascribed to Vyása by the Vyavahára Mayúkha, the Mitákshara and the Víramitrodaya is found here.

There is a verse in this which directly contradicts the doctrine laid down by our courts that subsequent inchastity of a widow does not operate to divest her of a share once vested in her. It runs thus: भार्याव्यभिचारिणी यावद्यावच्च नियमे स्थिता। तावत्तस्या भवेद्द्रव्यमन्यथा स्याद्विलुप्यते॥ Translation:—*As long as* the widow is chaste and devoted to religious observances, *so long* shall wealth be hers; else it vanishes, *i. e.* is taken away from her.

---

[1] Note that this passage is referred to Śankha by the Vír. l. 170 p. 2, and Aparáka.

*Uśanas.*

There are three works attributed to Uśanas, viz., Auśanasa Dharmaśástra, Auśanasa Smṛiti, and Auśanasa Smṛiti Dharmaśástra.

I. The Dharmaśástra of Uśanas (A and B) consists of 51 *Anushṭubh* verses, which give nothing more than a list of the several mixed classes and their occupations.

*Remarks.*—There is nothing in the work to indicate its authorship; while its contents rather point to its being an extract from some work on the sub-divisions of castes (see the first and the last verses). There is internal evidence to show that it could not have belonged to the Smṛiti period; and I cannot understand why Uśanas's name was associated with it, unless it be that in some controversy about castes, this composition was adduced by one party under the reputed name of Uśanas to give it antiquity. But this is a mere conjecture. That the work was made after hostilities among different castes had arisen is quite clear from the way in which the caste of *káyastha* is described in verse 25 at p. 499.[1] While the mention of Tantramárga or the worship of Śakti in v. 47 at p. 500 would prevent this work from being assigned to any early period of the Dharmaśástra literature,[2] the mention in the same verse of Vaikhánasas, who are styled *Náráyaṇa Gaṇáh,* or a community of Náráyaṇa's followers, would bring the work down to the 11th or 12th century according to some European scholars.[3] This conclusion is strengthened by the fact that several castes are here mentioned which are not referred to either in Manu or Yájñavalkya.

Vasiṣṭha is mentioned in v. 45 at p. 500.

II. The Smṛiti of Uśanas (A) consists of 618 Anushṭubh verses in nine chapters. It has one prose passage in the 9th chapter at p. 553.

Ch. I.—Certain sages headed by Śaunaka repaired to Auśana Bhárgava to receive instructions in Dharmaśástra. He reproduced to them what Uśanas had said on the subject before. This chapter contains a medley of directions connected with the daily life of man.

---

[1] The verse runs thus :—

काकाल्लौल्यं यमात्क्रौर्यं स्थपतेरथकृन्तनम् । आद्याक्षराणि सङ्गृह्य कायस्थ इति कीर्तितः ॥

[2] See observations of Prof. Wilson on the origin of the Tantra system in his Essays on the Religion of the Hindus, vol. I. p. 250. (Trübner and Co.'s edition of 1862). See also Literary Remains of Dr. Theodore Goldstücker, vol. I. p. 203. The number of Tantras found has since increased, and the date here assigned may have to be varied.

[3] About the tenets of these Vaikhánasas, see Prof. Wilson's Essays on the Religion of the Hindus, vol. I. p. 17.

Chs. II. and III.—Give details of *Áchára*, including oblations to manes, almost the same as in Manu, without the arrangement thereof found in the latter. It mentions the number of Ashṭakas to be three, whereas Aśvaláyana mentions them as four (see above note 2 p. 187). An oblation at Gayá and death at Prayága, or the present Allahabad, are spoken of as meritorious (see v. 237 p. 521).

Chs. IV. and V.—Śráddha ritual is here given. Proper and improper persons for invitation at a Śráddha are described. In vv. 256 and 257 p. 523, the students of Yajurveda and Atharváṅgirasa are specially mentioned as entitled to preference. The details are very minute.

Chs. V. to VII.—Treat of impurity consequent on birth and death. Manu and Prajápati are referred to (p. 535). At p. 539 a verse from Manu (see ch. v. v. 60) is bodily quoted without acknowledgment. The non-acknowledgment may perhaps be due to the verse being a traditional one in Manu's work itself.

Chs. VIII. and IX.—Treat of penances. As compared with Yájñavalkya, the number of offences and penalties is considerably multiplied. A certain precept is enjoined as one laid down by Brahmá[1] himself (see v. 587 p. 551).

*Remarks.*—The author of this Smṛiti is represented as a descendant of Uśanas, who belonged to the genus of Bhṛigu (see v. 1 of ch. i., p. 502). The Uśanas mentioned here could not have been the one that is referred to in the Mahábhárata as the antagonist of Aṅgiras,[2] as the son of Bhṛigu,[3] the preceptor of the Dánavas or demons[4] so often called *kavi* or Śukra; for v. 3. ch. i. p. 501 represents Bhárgava or a descendant of Bhṛigu as the father of Uśanas. An examination of this work has led me to think that this is not the Smṛiti which was accepted by modern writers on Dharmáśastra as the Smṛiti of Uśanas. My grounds for this statement are—I. That those passages which are referred to Uśanas by Nílakaṇṭha in his Vyavahára Mayúkha[5] are not met with here, although apparently the work as it stands is complete in itsef; II. The inculcating of the study of Vedas, by interdicting conversation with a twice-born who does not study them; and the condemnation of their recitation like a parrot, mark a period when the injunction in regard to Vedic study was losing its hold on the mind of the public, and recitation by rote without

[1] The last quarter of the verse is प्राह देवः पितामहः

[2] See Mahábhárata, Ádiparva I., ch. 76 v. 7 (l. 102 p. 2).

[3] Do. I., ch. 66, v. 42.

[4] Do. I., ch. 65 v. 36 and I., ch. 76. v. 6.

[5] See above Part I. p. 14 l. 10; p. 71 l. 18; p. 84 ll. 7, 9; p. 87 l. 3.

understanding its sense had come into vogue[1]; III. Again the setting down of a marriage with a woman of a dissimilar class as a primary sin marks a period removed from Manu and Yájñavalkya (compare Yáj. ch. i. v. 57 and ch. ii. v. 125). I would here note a circumstance which *primâ facie* might send this Uśanas far anterior to Aśvaláyana's time, for v. 186 p. 516 gives the number of the Ashṭakas or the lunar eighth day of the dark fortnight of particular months to be three, while Aśvaláyana in *Sútra* 1, *kaṇḍiká* 4, ch. ii. of his Gṛihya Sútra mentions them as four. The commentator of Aśvaláyana notices a divergent opinion of certain previous authors who held the number to be three, and says Aśvaláyana has in his said Sútra distinctly mentioned the word *four* to mark his dissent. But it appears to me that this fact does not prove the priority of Uśanas to Aśvaláyana, although this particular doctrine of his would be older than that of Aśvaláyana on the point.

Bhṛigu (p. 504) and Manu-Prajápati (p. 535) are referred to.

At the beginning of ch. iv. (p. 523) a student of the Yajurveda or the Atharvaveda is mentioned as a preferential Bráhmaṇa for an oblation to the manes. Why a student of the Ṛig-veda is omitted, when he is specially recommended to represent the deceased relative at an oblation is not clear.[2]

III. The Smṛiti Dharmaśástra of Uśanas (C and D) consists of seven chapters, and is mixed prose and verse. The copy D, which is a very recent transcript, is taken either from C itself, or from a copy which is the common original of them both; for in this work there are large gaps and clerical errors which in both copies exactly correspond.

Chs. I. and II.—The whole of the first and a large portion of the second chapter is omitted in the MSS. The portion is mostly in prose. Manu is quoted from in this work.

Ch. III.—The names of the different pure and mixed classes are given herein.

Ch. IV.—Treats of penalties and penances for different offences. On the subject of the marriage of a twice-born with a Śúdra woman, Uśanas states a variety of opinion by referring to Vasiṣṭha, Gautama, Hárita, and Vaivasvata, the last being likely Yama. There is a pretty large gap in this chapter.

Ch. V.—Treats of *Śráddha* ritual. It gives references to Manu and Vaivasvata.

---

[1] See ch. iii. vv. 194, 196, p. 517:—

योऽन्यत्र कुरुते यत्नमनधीत्य श्रुतिं द्विजः । स वै मूढो न सम्भाष्यो वेदबाह्यो द्विजातिभिः ॥
योऽधीत्य विधिवद्वेदं वेदार्थं न विचारयेत् । स सान्वयः शूद्रकल्पः स पात्रं न प्रपद्यते ॥

[2] See the Dharmasindhu Parichchheda iii. second half l. 11 p. 1.

Ch. VI.—This chapter is termed the *Vikrayádhyáya,* or a chapter on sale generally, but mentions nothing more than such articles as may or may not be sold by a Bráhmaṇa.

Ch. VII.—Treats of punishments to offenders according to their classes. Branding and mutilation are mentioned amongst the punishments. Manu is several times quoted; on one occasion on the authority of Manu a list of articles is given, which it is not theft to take without the owner's permission.[1] The last verse exalts this work to the rank of the Vedas, and lays down its study as very meritorious.

*Remarks.*—The style of this work appears to me to be quite modern from the way in which a proposition is first laid down in prose, and in support thereof verses from older authors are quoted, with the preface भवति चात्रश्लोकः (there is indeed a verse to this effect). This looks quite like the manner of the modern *Nibandhakáras* or treatise writers. Another reason why I am not disposed to treat this work as the real Smṛiti work of Uśanas is the author's mentioning a diversity of opinions on a subject without stating his own view thereon (see analysis of chapter iv.) I think this mode of statement marks it as a compilation, and is inconsistent with the character of a legislator, such as Uśanas is admitted by Yájñavalkya and other authorities to be. It must also be noted that the verses ascribed to Uśanas in the Vyavahára Mayúkha do not occur in this work. Neither the beginning nor the end suggest anything about the author. The title of the work Smṛiti dharmaśástra, is tautological (see Manu ch. ii. v. 10 quoted and translated in a note at p. 160 above).

All we know of Uśanas is that he was the preceptor of the demons, that he was a descendant of Bhṛigu, that he was the priest of Hiranya Kaśipu (see Bhágavata skandha vii. ch. v., v. 48) and of Bali, the great grandson of Hiraṇya Kaśipu, that a descendant of his styled Anśanasa is a *pravara* of the family of Gautama Áṅgirasas, and that he was the third Vyása or the compiler and arranger of the Vedas in the present *manvantara* (see Devíbhágavata skandha i. ch. iv.)

---

## *Aṅgiras.*

There are three versions of Aṅgiras, all very likely copies of the same work more or less complete. The first is Aṅgirasa Smṛiti, the second is the Smṛiti Dharmaśástra of Aṅgiras, and the third Aṅgirah Prokta Smṛiti.

I. Áṅgirasa Smṛiti (A, B) consists of 72 verses in Anushṭubh metre, and mainly treats of penalties and penances as the opening verse[2]

[1] Compare Bhṛigu's version of Manu's Code, ch. viii. v. 339.

[2] It runs thus:—

गृहाश्रमेषु धर्मेषु वर्णानामनुपूर्वशः । प्रायश्चित्तविधिं दृष्ट्वा अङ्गिरामुनिरब्रवीत् ॥

indicates. *Nílí* or indigo is strongly condemned, so much so that the wearing of a piece of cloth colored in indigo, or even the cooking of food with the fuel of indigo plant, is subjected to heavy penalties. A cloth colored in indigo is particularly prohibited to widows.[1] This is observed in the Hindu practice of the present day among the higher classes.[2] Verse 8 is common to Yama (see p. 562). Ápastamba is referred to in verse 54 (p. 559). There is a verse here (see v. 70 p. 560) which is also found in Ápastamba. Penalties are attached to intercourse of any kind with a Śúdra (see pp. 558, 559). The opening verse taken with the abrupt ending marks this as a fragmentary work.

II. The Smṛiti Dharmaśástra of Aṅgiras (C and D) is substantially the same as above work, with many omissions. The number of verses is 32.

III. The Dharmaśástra of Aṅgiras (C and D) contains 168 verses in Anushṭubh metre. Almost all the verses in the Smṛiti found in A and B are here given; so that there is reason to think that both the above pieces, though differently named, are only incomplete transcripts of this production. The opening verse of this represents Aṅgiras as addressing sages headed by Bháradvája.[3] There is here a jumbled statement of penalties, purifications, and impurities; but nothing that has reference to civil law. The last verse in the usual manner offers a bait to the study of the work by holding out to its reader absolution from all sins.[4]

*Remarks.*—This Smṛiti has no reference to civil law as may indeed be inferred from the absence of any quotation from Aṅgiras in the Vyavahára Mayúkha. There is reason to think, however, that Aṅgiras wrote on other portions of Hindu law, which are not contained in any of the three versions noted above; for example, a quotation in the Nirṇayasindhu, *parichchheda* iii. the second half l. 51, p. 2, which shows that Aṅgiras wrote on the four *Áśramas* or orders. Náráyaṇabhaṭṭa quotes Aṅgiras as laying down the number of *samskárs* (or purificatory ceremonies) to be twenty-five as against the forty given by Gautama and others. There are also other references to this author in standard authors that are not met with in these works, so that it follows that the

---

[1] See v. 21 on p. 556, which runs thus :—

मृते भर्तरि या नारी नीलीवस्त्रं प्रधारयेत् । भर्ता तु नरकं याति सा नारी तदनन्तरम् ॥

[2] Compare the passage from Skanda Puráṇa, noted in the Nirṇayasindhu, *parichchheda* iii. the second half l. 51 p. 2, which prohibits a widow's wearing a colored garment generally.

[3] The verse runs thus :—

धर्मजिज्ञासुभिः सम्यगमितौजा महाद्युतिः। भारद्वाजादिभिः दृष्टः प्राब्रवीदेतदङ्गिराः ॥

[4] The verse runs thus :—

अधीते य इदं शास्त्रमुक्तमङ्गिरसा स्वयम् । ऋषीणां सन्निधौ विप्रः सर्वपापैः प्रमुच्यते ॥

Smṛiti as at present available is either incomplete or quite different from that which eminent treatise-writers accepted as belonging to Aṅgiras. Aṅgiras is mentioned in Yájñavalkya Smṛiti (ch. i. v. 4). There are indications in the present work to show that it contains doctrines which must be later than Manu and Yájñavalkya. I. The first is the marked segregation of the Śúdra[1]; II. The mitigation of penalties in the case of the juvenile and the old marks in my opinion the introduction of an exception to the general rule in regard to punishments laid down by Manu and Yájñavalkya; III. The restriction in the interchange of meals among the different classes, observed in vv. 55 to 58 p. 559, is not seen either in Manu or Yájñavalkya; IV. In verse 163 (C and D)[2] there is an authority for the present practice of the Dekkanese, namely, that of cutting off only the ends of the braids of their wives at the Prayága shrine or Allahabad. The sneer with which this practice is treated by residents of other parts of India make me think it to be recent.[3]

There is no clue in this work to the age of Aṅgiras, nor anything to show which Aṅgiras he could be, save the fact that he was a contemporary of Bháradvája. It is almost clear that there were more than one Aṅgirases. The first is that connected with the Atharvaveda (see the opening passage of the Gopatha Brahmaṇa of the Atharvaveda p. 6.; Calcutta, 1870). The second is represented as cotemporaneous with Uśanas,[4] and as the father of Bṛihaspati. The third is the Aṅgiras mentioned in the Mahábhárata Vanaparva, chapters 217 to 231. The fourth is one of the six sons of Brahmá who are styled *Maharshis*, or the great sages,[5] as indeed the colophon in A styles the author of the present Smṛiti. He is also one of the ten *Mánasaputras* of Brahmá (see Bhágavata skandha iii. ch. xii., v. 22). He is the progenitor of a very numerous family afterwards divided into three great branches known as Kevaláṅgirasa, Gautama Áṅgirasa and Bháradvajáṅgirasa (see Áśvaláyana Śrauta Sútra, second half vi. 12, 3, p. 879). Aṅgiras is one of

[1] See verses 49 and 50 p. 558 शूद्राकं शूद्रसम्पर्कः शूद्रेण च सहासनम् । शूद्राज्ज्ञानागमः कश्चिज्ज्वलन्तमपि पातयेत् ॥ कृताग्रणामे शूद्रे तु स्वस्ति यो वदति द्विजः । शूद्रोऽपि नरकं याति ब्राह्मणोऽपि तथैव च ॥

See also the four verses that follow.

[2] The verse runs thus :—

एवमेव तु नारीणां मुण्डमुण्डापनं स्मृतम् । एकीकृत्य कचान् सर्वांश्छेदयेदङ्गुलद्वयम् ॥ [It ought to be शिरसो वपनं in stead of मुण्डमुण्डापनं.]

[3] See the Dharmasindhu *parichchheda* iii. second half l. 36 p. 2; where the practice is mentioned as based on custom, and intended as a penance; so that it is clearly optional.

[4] See Mahábhárata Ádiparva, ch. 76 v. 7.

[5] ब्रह्मणो मानसाः पुत्रा विदिताः षण्महर्षयः । मरीचिरत्र्यङ्गिरसौ पुलस्त्यः पुलहः क्रतुः ॥ See the Mahábhárata Vanaparva (Dialogue between Márkandeya and Yudhishṭhira).

those who visited Ráma on his return from exile (see the Adhyátma Rámáyaṇa Uttarkáṇḍa ch. i. v. 7).

---

*Yama.*

There are two works ascribed to Yama, viz., Yamasmṛiti and Yamadharmaśástra.

I. The Yamasmṛiti (A) consists of 78 verses, all in the Anushṭubh metre, save v. 44, which is in the Upajáti. It professes to deal with *Práyaśchitta* or penance alone (v. 1 p. 560); has some verses on purification; refers to Bṛihaspati (see v. 27 p. 562) and Bhásvati in v. 33 p. 563, v. 17 p. 562, and v. 54 on p. 565; speaks of certain castes stigmatized as *Antyaja* common with Aṅgiras (see v. 3 p. 554 and v. 33 p. 557 respectively). Verse 65 on p. 566 ends in यमस्य वचनं यथा (as has been said by Yama); v. 74 corresponds to v. 163 of Aṅgiras in C and D.

*Remarks.*—It is clear from the opening verse that this work relates only to one portion of the law; and the contents show that that too is done imperfectly, there being nothing either at the beginning or at the end to connect this work with Yama. It is most likely a detached fragment of another work. The last verse shows that the work was addressed to a द्विजश्रेष्ठ (the best of Bráhmaṇas), thus giving a pretty clear indication that this does not belong to the class of Smṛiti works, which as a rule are addressed to an assemblage of Ṛishis or sages.

This fragment affords indications of a later date than the digest of Yájñavalkya; as may be seen from the following circumstances:—

I. The exception introduced in v. 15 p. 561 to the general maxim that for the purposes of a sentence there is no proxy in criminal law, is not met with in Manu or Yájñavalkya; II. The penances laid down by Yájñavalkya are superseded in favour of gifts to Bráhmaṇas;[1] III. The exemption from punishment extended to children under six years of age in v. 16 pp. 561, 562. IV. The non-mention in Yajñavalkya of the castes referred to in v. 54 p. 565.

From a consideration of v. 17, on the one hand, which is met with in Aṅgiras, and from vv. 15 and 16 on p. 561 on the other, I am inclined to place Yama after Aṅgiras, inasmuch as the former notices an exception made by the latter to Yájñavalkya's law, and lays down an exception to that exception.

The definition of a वार्द्धुषिक given in v. 37 p. 563[2] is opposed to that

---

[1] See v. 43 p. 564, which runs thus:—

यावद्विप्रा न पूज्यन्ते सम्भोजनहिरण्यकैः । तावच्चीर्णव्रतस्यापि तत्पापं न प्रणश्यति ॥

[2] It runs thus:—

समार्घं तु समुद्धृत्य महार्घं यः प्रयच्छति । स वै वार्द्धुषिकोनाम ब्रह्मवादिषु गर्हितः ॥

given in the Amarakośa, *kāṇḍa* ii. *varga* ix. v. 5 and its commentary (see Bombay series edition of 1877 p. 210).

II. The Dharmaśástra of Yama (B, C and D) consists of 98 Anushṭubh verses; refers mainly to *Práyaśchitta* or penance; and has a few verses on purification and on water oblations to deceased relations.

*Remarks.*—This Smṛiti is entirely different from the one above mentioned as found in A. Only a few verses agree, such as 33 and 54 of this *Dharmaśástra*. The author of this is represented[1] as the foremost of Ṛishis, and declaring the law as laid down by Śrutis and Smṛitis. The inclusion of Smṛitis amongst his sources stamps him as a compiler and not a law-giver. In v. 29[2], a Kápálika is mentioned as one whose food should not be partaken of on pain of incurring the penalty of performing at the least two *Aindavas*, which are penances similar to *Chándrayaṇas*. *Kápálikas* are worshippers of Bhairava, an attendant of Śiva, who has no place in the Vedic pantheon, and is purely a Puráṇic or Tantric deity not met with in Manu or Yájñavalkya. It must be noted that the mention of this sect under the preceptorship of Baṭukanátha at Ujjayini, now popularly spelt as Oojein, in the Śankara Vijaya of Ánanda Giri in ch. xxiii. p. 138, as well as in the Śankara Jaya of Mádhava, takes this sect to a time earlier than that of the famous Śaṅkaráchárya.

As regards the pedigree of the author, Colebrooke (see p. 469 of vol. I. of his Essays) considers him as the brother of the seventh Manu or Manu of the present age. The fact that both the present Manu and Yama are styled Vaivasvata or sons of Vivasvat would indeed make them brothers; but it is hard to see how Yama, who, as son of Vivasvat, is represented in the Vedas as a deity[3] can be identified with a human legislator who is expressly mentioned in this work as the best of Ṛishis or Munis. It is fair to add that a quotation from Yama, which Kullúka has taken in his gloss on v. 38 ch. ii. of Manu, affords grounds to hold that Yama the legistator was also son of Vivasvat. But that passage is not found in both the abovementioned versions of Yama, and I am not sure that the work of Yama mentioned by Kullúka may not be entirely different. If we are to suppose them as one, then it must follow that our present Yama is only fragmentary. That this is likely will appear from several texts which are elsewhere attributed to Yama, but are not found here.[4]

[1] See the opening verse.

श्रुतिस्मृत्युदितं धर्मं वर्णानामनुपूर्वशः । प्राब्रवीदृषिभिः पृष्टो मुनीनाममणीर्यमः ॥

[2] It runs thus:—

कापालिकान्नभोक्तॄणां तन्नारीगामिनां तथा । कृच्छ्राब्दमाचरेज्ज्ञानादज्ञानादैन्दवद्वयम् ॥

[3] See Muir's texts, vol. V., ch. xviii. pp. 287 to 305.

[4] See for example Nirṇayasindhu *Parichchheda* iii. the first half l. 37 p. 1, where a text of Yama is quoted on the subject of marriage.

Verse 78 lays down a complete change of the *gotra* or family of a woman on her marriage.[1]

Verse 91 mentions *Gosṛiṅga* or the horn of a cow as a certain measure of height, of the definite extent of which I am not aware, although it appears to be something like a cubit.[2]

Verses 19 and 20 contain strange provisions for punishing suicide (only an unsuccessful attempt of which is punishable under the Indian Penal Code), and for punishing the sons and friends of one who successfully or unsuccessfully attempts suicide.[3]

*General Remarks.*

Yama appears in the Ṛig-veda and Sátapatha Bráhmaṇa of the White Yajurveda as a deity to whom several hymns are addressed. He is worshipped now with the recitation of Ṛig-veda x. 14, 13. In the Puráṇas, no Yama is met with as either a king or a sage; so that I am strongly inclined to regard the Smṛiti writer Yama, whom Kullúka quotes in his comments on Manu ch. ii. v. 38, as trying to enhance the importance of his work by styling himself the son of Vivasvat, and so giving the work an appearance of being a production of god Yama. The Puráṇas represent Yama as the guardian deity of the south. Being cursed by sage Máṇḍayya, he is said to have become incarnate in the form of Vidura, the natural brother of Dhṛitaráshṭra and Paṇḍu (see Mahábhárata Ádiparva chs. 107 and 108). Yama is also said to have appeared in this world in the form of Yudhishṭhira (see Mahábhárata III., 314, 6, l. 310, p. 2).

His office in heaven is to judge of the actions of men in this world after their death, and to give rewards or punishments as may be due. As above mentioned, extracts attributed to Yama exist in several works besides those previously described, which are not to be found in these collections. Such a work therefore must have been current in several parts of India, particularly about the South at or about the time of Yájñavalkya.

---

*Ápastamba.*

There is only one work named A'pastamba Smṛiti in all the collections I have consulted (A, B, C, and D). It consists of ten chapters in the Anushṭubh metre, and treats of nothing but penances as the opening verse indicates.

---

[1] It runs as follows :—

स्वगोत्राद्भ्रश्यते नारी विवाहात्सप्तमे पदे । स्वामिगोत्रेण कर्तव्यास्तस्याः पिण्डोदकक्रियाः ॥

[2] The verse runs thus :—

हस्तौ कृत्वा तु संयुक्तौ पूरयित्वा जलेन च । गोशृङ्गमात्रमुद्धृत्य जलमध्ये जलं क्षिपेत् ॥

[3] The verses run thus :—

आत्मानं घातयेद्यस्तु रज्ज्वादिभिरुपक्रमैः । मृतोऽमेध्येन लेतव्यो जीवतो द्विशतं दमः ॥
दण्ड्यास्तत्सुहृन्मित्राणि प्रत्येकं पणिकं दमम् । प्रायश्चित्तं ततः कुर्युर्यथाशास्त्रप्रचोदितम् ॥

Ch. I.—Contains 34½ verses; mostly treats of penances for injuries or annoyances done to cows. The highest reverence is enjoined for cows; and minute directions are given for their tending, tying, &c.[1]

Ch. II.—Contains 14 verses; states what things never become impure, and how others are purified when impure.

Ch. III.—Contains 12 verses; lays down penances for living under the roof of a Cháṇḍála; has general rules and exceptions in regard to the performance of penances; has a verse (No. 6) found also in Aṅgiras and Yama (see pp. 557 and 562). Verse 7 is found in Aṅgiras (see p. 561) with a slight variation, viz., that the proxy on whom the punishment is enjoined to be inflicted is the preceptor, or a friend in Ápastamba; whereas he is the father, brother or a relation in Aṅgiras. In verse 10 there is an exaltation of the Bráhmaṇa similar to that on p. 564 v. 43 in Yama.

Ch. IV.—Has twelve verses; treats of penances for drinking out of a Chaṇḍála's cup, or for his touch, &c.

Ch. V.—Has 14 verses; lays down a penance for a twice-born for drinking water while defiled by the touch of a Cháṇḍála. Verse 4 lays down that there is no penance for a Śúdra except giving presents to Bráhmaṇas. Verse 8 is here referred to Aṅgiras, but it is not found in the Áṅgirasa Smṛiti.

Ch. VI.—Has 10 verses; refers to the use of indigo, and penances for using it, &c.

Ch. VII.—Has 31 verses, all relating to a woman in menstruation.

Ch. VIII.—Has 21 verses; commences with the purification of things; condemns intercourse with the Śúdras. Verses 7 and 8 are identical with vv. 48 and 49 on p. 558 in Aṅgiras.

Ch. IX.—Has 43 verses; describes miscellaneous penances; vv. 8 and 9 (p. 579) are identical with vv. 44 and 45 (p. 564) in Yama; so are vv. 26 and 27 (p. 581) identical with vv. 71 and 72 (p. 560) in Aṅgiras. The practice of taking *Śulka* or bride-price is strongly condemned (v. 25, p. 581).

Ch. X.—Has 16 verses; inculcates forbearance, and mentions Yama in v. 3 as a deity of retribution after death. V. 11 is seen in the Hitopadesa of Vishṇu śarman, and is a compendium of the duties of a man. Then follow certain exceptions to the law about impurities.

*Remarks.*—This is professedly a work written on one branch of the Árya dharmaśástra; and I fail to see why it should have been styled

[1] See for instance v. 21 on p. 568 and v. 25 p. 569.

by Colebrooke (see his Essays, vol. I., p. 469) as the metrical abridgment of the larger work of Ápastamba, viz., his Dharmasútra. To my mind, v. 25 on p. 581[1] appears diametrically opposed to such a supposition, for Ápastamba in his Dharmasútra *Praśna* ii. *Paṭala* vi., *Kaṇḍiká* xiii. *Sútra* xii. (p. 72) lays down a doctrine about the payment of *Śulka* or bride-price to the father of the bride, which is inconsistent with the condemnation observed in the said v. 25 p. 581 in ch. ix. Another conclusion that I draw from the said verse is, that this production is much later than Yájñavalkya, who lays down a rule for the devolution of this bride-price, in ch. ii. v. 144.[2] I must not omit to note that Manu in ch. iii. v. 51 also condemned the acceptance of *Śulka* in marriages; but I hold that in ch. iii. v. 31, and ch. ix. v. 197 Manu shows the existence of the custom of receiving *Śulka* which he had to recognise despite his disapproval of it.

As between Aṅgiras and Ápastamba as judged by their works in compilation A, I am of opinion that Ápastamba is the earlier. For, I. —Aṅgiras expressly quotes from Ápastamba (see v. 54 at p. 559)[3]; II.—Aṅgiras has borrowed some verses bodily and others with some variations from Ápastamba (compare vv. 49, 50, 52, 53, 55, 57, pp. 558 and 559, from Aṅgiras, with vv. 7, 8, 9, 10, 12, 13, in ch. viii. pp. 577, 578 from Ápastamba); III.—A comparison of v. 8 p. 555 in Aṅgiras[4] with v. 14 ch. v. p. 574 in Ápastamba[5] shows that while both are laying down a penance for one and the same objectionable act, the penance is different in the two cases. Ápastamba lays down bathing and sipping water, while Aṅgiras says sipping water *alone* is sufficient. The use of the word *eva* (alone) in the said verse shows that Aṅgiras had in his mind at the time a text which enjoined something more than what he did, and that he emphatically dissented from that text; so that Aṅgiras must be later.

The theory propounded by me elsewhere that most of these Smritis were not the direct productions of their reputed authors, but that they were the reproductions of their doctrines by either their descendants or followers, meets with confirmation here. Apart from the fact that there are several verses in this book which end in आपस्तम्बोऽब्रवीन्मुनिः (so

---

[1] It runs thus :—

अल्पेनापि हि शुल्केन पिता कन्यां ददाति यः । रौरवे बहुवर्षाणि पुरीषं मूत्रमश्नुते ॥

[2] Vijñánesvara defines *Śulka* mentioned in the verse as यद्गृहीत्वा कन्या दीयते (that which is taken when a daughter is bestowed in marriage) see Mit. ch. ii. l. 62 p. 2.

[3] It must be added that, although this verse is not found in Ápastamba exactly in this form yet v. 21 in ch viii. p. 578 in the latter is very similar.

[4] The verse runs thus :—

विप्रो विप्रेण संसृष्ट उच्छिष्टेन कदाचन । आचान्त एव शुध्येत अङ्गिरा मुनिरब्रवीत् ॥

[5] The verse runs thus :—

विप्रो विप्रेण संसृष्ट उच्छिष्टेन कदाचन । स्नात्वाचम्य विशुद्धः स्यादापस्तम्बोऽब्रवीन्मुनिः ॥

said sage Ápastamba),[1] the opening verse[2] distinguishes the writer of the work from the propounder of its contents, in unmistakeable terms.

Uśanas is mentioned in v. 29 ch. i p. 569.

As regards the age in which Ápastamba lived, he is mentioned nowhere as a Rishi save in the Matsya-puráṇa ch. vii., vv. 33, 34, where he appears as a contemporary of Kaśyapa and the presiding priest at the sacrifice named *Putrakámeshṭi* by Diti, who became after that sacrifice the mother of the forty-nine Maruts. He also appears as a descendant of Bhṛigu. Ápastamba is again referred to in the Mahábhárata Ánuśasanika Parva ch. 65 v. 12; but no account of him is given there beyond the fact of his having attained final emancipation by means of a gift of sesamum. There is also a *kalpasútra* including *Dharmasútra* ascribed to him. The work of Ápastamba, referred to by Nílakaṇṭha in his Vyavahára Mayúkha (see Part I. p. 55 l. 7; and p. 96 l. 29) is his Dharmasútra. Some verses occur here that are also found in Laghu Paráśara.

The antiquity of Ápastamba is clear from his mention in the Vidádi Gaṇa in the Gaṇapáṭha of Páṇini (see Bothlingk's Paṇini vol. II. p. 116). There are very few followers of the Ápastamba Sútra in this Presidency as far as I am aware, and they are confined to the Deśastha and Drávida sections of the Drávid division. Dr. Bühler's statement in his introduction to the translation of Ápastamba (see Sacred Books of the East, vol. II., Introduction pp. 31 and 32) seems to be inaccurate; for those that are generally known in this part of the country as Ápastambíyas are merely followers of the Hiraṇya keśi Sútra of the Black Yajurveda.

---

*Samvarta.*

The Samvarta Smṛiti (A, B, C, D,) is the same in all the four compilations with slight variations in the number of verses, due probably to accidental omissions in transcription. It consists of 227 verses in A and B, and of 210 verses in C and D, all in the Anushṭubh metre. It is not divided into chapters. It lays down the duties of a Bráhmachárin up to v. 34 (p. 587), those of a householder up to v. 96 (p. 592), those of a hermit up to v. 100 (p. 592), and those of an ascetic up to v. 106 (p. 593). Then begins the portion on penances. The verse (v. 108) enumerating the perpetrators of primary sins, is identical with v. 1 ch. viii. of Usánas (p. 542), and only a paraphrase of Yáj. ch. iii. v. 227.

---

[1] See for instance ch. v., v. 14 p. 574; ch. vi. v. 9 p. 575; ch. vii. v. 31 p. 577; ch. viii. v. 21 p. 578.

[2] It runs thus:—

आपस्तम्बं प्रवक्ष्यामि प्रायश्चित्तविनिर्णयम् । दूषितानां हितार्थाय वर्णानामनुपूर्वशः ॥

The penance and purification for the slayer of a Bráhmaṇa is laid down up to v. 113 (p. 593) ; those for a drinker of wines (the most objectionable kinds of which are mentioned in v. 115) up to v. 119 (p. 594) ; those for a thief up to v. 122 (p. 594) ; those for the violator of his preceptor's bed, and for one who associates with any one of the aforesaid sinners of four kinds, are laid down up to v. 125 (p. 594). Then follow penances for secondary sins and general ordinances for purification to the end of the work.

*Remarks.*—The foregoing analysis will show that so far as this treatise shows, Samvarta has not written anything on the civil law : and that in what he wrote on ritual and penance, there is nothing that is original. That this work was accepted by Kamalákara as the genuine Smṛiti of Samvarta would appear from the quotation of v. 173 (p. 598) in his Nirṇayasindhu *Parichchheda* iii. chapter on impurity l. 19 p. 1. But the quotations made from Samvarta by Nílakaṇṭha in his Vyavahára Mayúkha (Part I. p. 3 l. 11) and by the Víramitrodaya l. 9. p. 2[1] show that Samvarta wrote on the duties of a king and the administration of justice ; and the absence of those passages in the work now available clearly marks it as fragmentary.

It is worthy of note that in v. 35 p. 587,[2] all other forms of marriage save the Bráhma are emphatically discarded for a twice-born. This circumstance would only show Samvarta to be later than Manu (see ch. iii. vv. 20—26) ; but it affords no clue to deciding his relative position with reference to Yájñavalkya. For the latter only defines the eight forms of marriage laid down by Manu, and is silent as to which should be adopted by the different classes. (See Yáj. ch. i. vv. 58 to 61.) It would appear from this that in Yájñavalkya's time Manu's division of the different forms of marriage among the different classes had been broken through ; and that his only defining them without assigning them to different classes may be taken to be a compromise between Manu on the one hand and Samvarta and other writers on the other. I only offer this as an explanation, which, if correct, will place Samvarta prior to Yájñavalkaya, and this on the supposition that the Smṛiti under his name represents his opinions.

The verses in which his name is mentioned are v. 38 (p. 587) ; v. 164 (p. 598) ; v. 227 (p. 603).

As regards his history, the Puráṇas mention him as the seventh of the eight sons of Aṅgiras whose eldest son was Bṛihaspati. This

---

[1] They run as follows :—

चतुर्दशी त्वमावास्या पौर्णमासी तथाष्टमी । लिखिष्वासु न पश्येत्तु व्यवहारान्विचक्षणः ॥
तस्माच्छास्त्रानुसारेण राजकार्याणि साधयेत् । वाक्याभावे तु सर्वेषां देशदृष्टमतं नयेत् ॥

[2] It runs as follows :—

अथ द्विजोऽभ्यनुज्ञातः सवर्णां स्त्रियमुद्वहेत् । कुले महति सम्भूतां लक्षणैश्च समन्विताम् ॥
ब्राह्मेण विवाहेन शीलरूपगुणान्विताम् ॥

Samvarta was the presiding priest at the sacrifice of Marutta, a prince of the solar race (see the Mahábhárata, Śántiparva Rájadharma ch. xxix. v. 21 [l. 27 p. 2]). Valmíki's Rámáyaṇa, Uttara Káṇḍa, *Sarga* xviii. vv. 2, 3 (l. 28 p. 1). alludes to this story of Samvarta, and makes Marutta a contemporary of Rávaṇa. The fact that Marutta's sacrifice took place on the banks of the Yamuná at a sacred place called Plakshávataraṇa may afford some indication to Samvarta's place of residence. Beyond the facts above stated, we know nothing of him; but it appears likely from his being requested to preside at a sacrifice which is celebrated alike in the Bráhmaṇas as well as the Puráṇas, that Samvarta was the head of a school; so that it may be that the present work is the production of some pupil or descendant who epitomized his master's instructions.

---

*Kátyáyana.*

The Kátyáyana Smriti, as it appears in A and B, is divided into three *Prapáṭhakas* or parts, each of which is sub-divided into *Khaṇḍas* or chapters. The number of these *Khaṇḍas* in all is 29.

*Prapáṭhaka I.*

Khaṇḍa I.—Contains 18 verses in Anushṭubh metre; contains general rules in connection with the ritual to be narrated. Vasishṭha is referred to in v. 18 p. 605.

Khs. II. to V.—Contain 14, 14, 12, and 11 verses respectively, and treat of *Śráddha* ritual. A certain form of *Śráddha* ritual laid down by Vasishṭha is referred to in *Khaṇḍa* iv. v. 12 p. 608, there is one verse in Upajáti metre in *Khaṇḍa* v., viz. v. 5. p. 608.

Khs. VI. to IX.—Contain 14, 14, 24, and 15 verses respectively, relate to the production of fire by friction and its worship. *Khaṇḍa* IX. v. 11. (p. 614) is in Vamśastha metre.

Kh. X.—Has fourteen verses, and relates to the duties at the commencement of each day. Nárada is referred to in v. 2. p. 615.

*Prapáṭhaka II.*

Kh. XI.—Has 17 verses, and relates to the three prayers offered at the commencement, the middle, and the end of the day.

Kh. XII.—Has 5 verses, and one prose passage; relates to libations of water to the gods. Verse 3 (p. 618) is in Upajáti metre.

Kh. XIII.—Has 14 verses; and treats of the five daily sacrifices. Verse 9 is in Áryá metre; and v. 13 contains the dissent of Gotama from the author in regard to saluting the manes.

Kh. XIV.—Has 13 verses and one prose passage; relates to Brahmayajña and Vaiśvadeva. V. 8 (p. 620) is in the Upajáti metre.

Khs. XV. to XIX.—Have 21, 23, 25, 24 and 16 verses respectively, refer to gifts to Bráhmaṇas, the dimensions of the sacrificial altar, certain oblations to the manes, the monthly and fortnightly sacrifices, and the duties of a wife in connection with the worship of fire. Gotama, Śáṇḍilya, and Śáṇḍilyáyana are referred to in v. 21 kh. xvii. (p. 626) and Gobhila in v. 24 do. do.

*Prapáṭhaka III.*

Khs. XX. to XXIX.—Have 19, 16, 10, 14, 16, 18, 17, 21, 19 and 19 verses respectively; treat of the fire to be used in cremation, the worship of fire in detail, impurities on birth and death, sacrifices and penances for omissions in that ritual, and certain other oblations, &c. The Rámáyaṇa is referred to in v. 10 kh. xx. (p. 631). Verse 9 kh. xxii. (p. 633) is identical with Yáj. ch. iii. v. 11. Bhṛigu is referred to in v. 10. kh. xxvii. (p. 640). Verses 12 and 13 ibid. are identical with Manu ch. ii. vv. 46, 47. Gayá as a sacred place of offering oblations to manes is mentioned in v. 9 kh. xxix. (p. 643).

*Remarks.*—This same work appears in C and D as the Smṛiti of Gobhila, with the colophon styling it as simply *Karma Pradípa*. It seems the opening verse[1] gave grounds for this incorrect designation of the work. But it is quite clear that the work is not one of Gobhila but of Kátyáyana, as the colophons in A and B expressly style it; for Karkáchárya one commentator of the Kátíya Śrauta Sútra (of the White Yajurveda) often refers to Kátyáyana's texts which are found in this work.[2] From the way in which these references are made by expressly mentioning the name of Kátyáyana, it is evident that Karkáchárya regarded the author of the Karmapradípa as different from the author of the Śrauta Sutras he was commenting on, although they bore the same name.[3] This is corroborated by the said Karkáchárya quoting certain verses belonging to the Karmapradípa, viz., vv. 12, 13 and 14 kh. xv. (p. 622) as coming from *Chhandoga-pariśishṭa* (see Kátíya Śrauta Sútra p. 338 ll. 7, 5, and 9 respectively), and thereby showing that this Karmapradípa of Kátyáyana was a Pariśishṭa of the Śama-veda.[4] Gobhila is known to be the author of the Gṛihya Sútras of

[1] It runs thus :—

अथातो गोभिलोक्तानामन्येषां चैव कर्मणाम् । अस्पष्टानां विधिं सम्यग् दर्शयिष्ये प्रदीपवत् ॥

[2] Compare v. 3 kh. vii. p. 610, vv. 3 and 18 kh. xx. pp. 620 and 621, with Kátíya Śrauta Sútra p. 354 l. 6; p. 354 l. 1; p. 353 l. 21 respectively.

[3] This is confirmed by Chandra-Kánta Tarkálaṅkára in his commentary on Gṛihyásaṅgraha (a supplement by Gobhila's son to the Gṛihya Sútras of Gobhila), who often quotes from the Karmapradípa, ascribing it to Kátyáyana, and also hints that the Kátiáyana who wrote it was a follower of the Sámaveda. (See Gobhila Gṛihya Sútra. Bib. Ind. p. 797 ll. 4 and 10.)

[4] See further Max Müller's Sanskrit Literature, 2nd edition, p. 201 note 5.

Śamaveda; and the circumstance of Kátyáyana being a Parisishta-writer to supplement Gobhila, explains why Śámaveda is invoked at the beginning of this work, and why Gobhila's name is mentioned there. The supplementary nature of this work is apparent from the author's distinctly saying in the opening verse that he was borrowing from authors others than Gobhila, and from his subsequently quoting from other authors where they supported or dissented from Gobhila.[1] It thus appears that this work has been wrongly designated a Smṛiti. At any rate, that work of Kátyáyana from which Nílakaṇṭha has made very copious extracts in his Vyavahára Mayúkha, and which Colebrooke describes as 'a clear and full treatise on law' (see Essays vol. I. p. 469), is not the present work which contains nothing about civil law.

Kátyáyana's name is connected with several works such as the Śrauta Sútra of the White Yajurveda, the Karmapradípa which, as we have seen, is a *parisishṭa* of Sámaveda, the Varttikas on the Grammar of Páṇini, two Sarvánukramas of the Ṛig-veda and the White Yajurveda, and the Smṛiti as quoted by modern treatise writers on *Dharmaśástra*. Again, a Kátyáyana is mentioned as residing at the court of Ráma in Uttarakáṇḍa ch. lxxiv. vv. 3, 4 (l. 114 p. 1).[2] It is hard to say whether all the abovenamed works were the works of one and the same individual, or of several, although I incline to the latter supposition. I may also mention that in so far as the Karmapradípa alludes to the Rámáyaṇa (see v. 10 kh. xx. p. 631), it is not unlikely that it may be the production of that Kátyáyana who was a judicial adviser at the court of Ráma. The Skanda Puráṇa mentions Kátyáyana as son to Yájñavalkya from his wife Kátyáyaní and as the author of Vedic Sútras, thus identifying him with the author of the Kátíya Śrauta Sútra.

---

*Bṛihaspati.*

The Smṛiti attributed to Bṛihaspati is one and the same in A, B, C, and D; though in C and D there are 31 verses omitted. In A and B it consists of 80 verses, all in the Anushṭubh metre, save v. 10 at p. 645, and v. 30 at p. 647, which are in the Upajáti and Indravajrá metres respectively.

It opens with a question by Indra to Bṛihaspati as to which was calculated gift to secure eternal bliss. Bṛihaspati in reply mentions a grant of land as of superlative efficacy. Yadu and Nahusha of the lunar dynasty, and Pṛithu, Dilípa, Nṛiga and Sagara of the solar

---

[1] See v. 18, kh. i. p. 605; v. 12 kh. iv. p. 608; v. 13 kh. xiii. p. 619; v. 4 kh. xx. p. 630; v. 13 kh. xxiv. p. 636; v. 21 kh. xvii. p. 626.

[2] They run as follows :—

ततो द्विजा वसिष्ठेन सार्धमष्टौ प्रवेशिताः । सजानं देवसङ्काशं वर्धस्वेति ततोऽब्रुवन् ॥
मार्कण्डेयोऽथ मौद्गल्यो वामदेवश्च काश्यपः । कात्यायनोऽथ जाबालिर्गौतमो नारदस्तथा ॥

dynasty (see vv. 25 and 26 p. 646) are highly extolled for their grants of land; and the horrid penalty of resumption invariably met with in all Sanads (grants) in this country is given in vv. 28 and 29 p. 646. Vyása is referred to in v. 43 p. 648. A Bráhman's property is invested with a halo of sanctity, and protected against depredations of thieves and unjust kings by means of a long dissertation. The digging of tanks for public use is commended under a prospect of great merit in the next world. Then follow miscellaneous verses.

*Remarks.*—There is nothing to support the claim of this work to a rank in the Smṛiti literature; nor is there anything to connect it with Bṛihaspati save the last verse. The dialogue in the opening verses as well as the style of the whole indicate that it is a piece severed from some Puráṇa, and set up as an independent work, merely because Bṛihaspati's name occurs therein. Bṛihaspati's Smṛiti is very largely drawn upon by Nílakaṇṭha on the civil law; and is represented as one of the four recensions of Manu.[1] That work is undoubtedly not the one that we have before us. It must be noted that in C and D the work commences with a verse which mysteriously introduces king Nala,[2] and is termed in the colophon as the abridged Bṛihaspati. Whether it is this work which Colebrooke alludes to when he speaks of the existence of an abridgment of Bṛihaspati (see his Essays, vol. I. p. 469), it is hard to say. But it is likely it is not; for a work which gives precedence to gifts over all penances, and is so far modern, could not have been accepted by him as belonging to the Smṛiti period.

*General Remarks.*

Bṛihaspati is represented as the eldest son of Aṅgiras (see Mahábhárata Ádiparva, ch. 76), brother to Samvarta, the hereditary preceptor of the gods, and a cotemporary of Śukra or Uśanas. In Mahábhárata Ádiparva ch. 104, he is represented as son of Utathya, and brother of Dírghatamas. He is said to have been the fourth Vyása, or arranger of the Vedas in the present *Manvantara* (see Devi Bhágavata skandha i. ch. iv.). This is the Puranic account of Bṛihaspati. In the Vedas the priestly character attributed to him in the Mahábhárata is nowhere met with; nor is there any warrant in the Vedas for holding him as the son of Aṅgiras. Dr. Muir indeed asserts both[3] these circumstances in respect of him on the authority of the Ṛig-veda; and cites in support thereof the following passages from the Ṛig-veda, viz., x., 141, 3 and ibid. iv., 40, 1; vi., 73, 1 and x., 47, 6. I shall examine these passages in the said order. In Ṛig-veda x., 141, 3, the last quarter is

[1] See above Introduction.

[2] The verse runs thus:—

बृहस्पतिकृतं पुण्यं प्रवक्ष्यामि विशेषतः । यच्छ्रुत्वा तु नलो राजा सर्वपापैः प्रमुच्यते ॥

[3] See his Sanskrit texts vol. V., p. 280.

ब्रह्माणं च बृहस्पतिम्. Sáyaṇa explains it as ब्रह्माणं प्रजापतिं बृहस्पतिं च (see Max Müller's Ṛig-veda, vol. VI. p. 513). How in the face of this authoritative explanation Dr. Muir can make the word ब्रह्माणं qualify बृहस्पतिं as he apparently does, is more than I can see, especially when the existence of the particle च would rather necessitate Sáyaṇa's mode of explanation, and when Prajápati, for whom the word Brahmáṇam is used according to Sáyaṇa, does exist as a deity by himself on Dr. Muir's own showing (see his Sanskṛit texts vol. V. p. 390). Far from appearing in the Vedas as a priest of the gods, Bṛihaspati appears there as a warrior having weapons (see Ṛig-veda ii., 24, 8; vii., 97, 7, and x., 53, 9), and leading the armies of gods along with Indra (see Ṛig-veda x., 103, 8; viii., 96, 15).

In regard to the descent of Bṛihaspati from Aṅgiras, which I think is meant to be understood by Dr. Muir when he says Bṛihaspati was an Áṅgirasa, Sáyaṇa's comments on the Ṛig-veda iv., 40, 1, are indeed vague to some extent, though to my mind they sufficiently indicate that he considered Áṅgirasa as a deity by himself distinct from Bṛihaspati, as will more clearly appear from what follows. It suffices for my purposes here to observe that there is nothing in the verse to show that आङ्गिरसस्य in the line must go with बृहस्पतेः. In the second reference in vi., 73, 1, Áṅgirasah Bṛihaspati is explained by Sáyaṇa as आङ्गिरसः पश्चाज्जातः (born after Aṅgiras), supporting himself by a quotation from Âitareya Bráhmaṇa (see Max Müller's Ṛig-veda vol. III., p. 888), which is translated by Dr. Haug as follows: "Those parts (of Prajápati's seed after it was heated) which were coals (Aṅgára) became the Aṅgiras. Those coals whose fire was not extinguished, and which blazed up again, became Bṛihaspati." (See Dr. Haug's Aitareya Bráhmaṇa vol. II. p. 220.) In x., 47, 6, Sáyaṇa does not take the word बृहस्पतिम् as standing for the deity going under that name; for he explains it by बृहतो मन्त्रस्य स्वामिनम् (the master of *big* sacred formulas), and makes it an epithet of Saptagu, who is the Ṛishi of the hymn. Moreover, the word आङ्गिरसः is referred to यः standing for Saptagu, and does not go with Bṛihaspati; as indeed it would be impossible to take it, considering the different cases in which the two words stand. Thus it will appear that in none of these three passages is Bṛihaspati described as an Áṅgirasa in the sense of a descendant of Aṅgiras.

It is perhaps superfluous to mention that the word Bṛihaspati occurs in the Gaṇapátha of Veda in the वनस्पत्यादि Gaṇa, seeing that it is found in the Vedas.

---

*Paráśara.*

There are two works going under the name of Paráśara, viz., a Paráśara Samhitá and a Bṛihat Paráśara Samhitá.

I. Parásara Samhitá consists of twelve chapters (A, B, C, and D).

Ch. I.—Several sages once repaired to Vyasa in his hermitage on the summit of the Himálayas, and requested instructions from him on the subject of *Dharmaśástra*. He, leading them to the hermitage of his father Parásara at Badarikáśrama, communicated to him the prayer of the sages. Parásara then begins by stating certain ordinances common to all the four classes, and laying down their occupations, and the distinctive features of the different *yugas* or ages. The chapter consists of 64 verses. Verses 21 and 22 (part ii. p. 3) are identical with Manu ch. i., vv. 85 and 86 respectively.

Ch. II.—Consists of 17 verses, and treats of the duties of a householder in all the four classes.

Ch. III.—Consists of 54 verses, and treats of impurities of birth and death. Verses 43 and 44 are in the Upajáti metre.

Ch. IV.—Consists of 29 verses, and lays down miscellaneous penances. Prajápati in v. 4 (part ii. p. 13) and Sánkha in v. 25 (part ii. p. 15) are referred to. In v. 19 (part ii. p. 14), four out of the twelve kinds of sons are mentioned, and an adopted son is defined.

Ch. V.—Consists of 25 verses; and gives penance for a dogbite, and certain ceremonies observed at the time of cremation.

Ch. VI.—Consists of 71 verses; and prescribes penances for different faults and omissions.

Ch. VII.—Consists of 42½ verses, and lays down means of purification and penances. Manu is referred to in vv. 33 to 35.

Ch. VIII.—Consists of 41½ verses. A *parshad* is defined, and confession to them by the guilty is enjoined as a means of absolution. The study of the Vedas by the twice-born is insisted on.

Ch. IX.—Consists of 62 verses; lays down minute rules with regard to the tethering, grazing of cows, &c., and penances for injuries done to them. Verses 33 and 48 are in the Upajáti metre. Manu is referred to in v. 51.

Ch. X.—Consists of 41½ verses, defines penances, and directs certain penances to be performed for certain offences.

Ch. XI.—Consists of 53 verses; lays down penances, and defines certain mixed classes;

Ch. XII.—Consists of 74 verses; lays down penances, a pilgrimage to Ráma's bridge at Rameśvara being one of them.

*Remarks.*—In C and D the number of the verses in different chapters does not correspond to that given above, owing mainly to several omissions and to a difference of arrangement in respect of chapters.

The arrangement in A and B seems to be the correct one; for its total number of verses comes up to the figure mentioned in v. 73 ch. xii. (part ii. p. 52); and it is an arrangement which the well known Mádhava, commentator of the Paráśara Smriti, has accepted. Mádhava's analysis is as follows :—

साक्षादिष्टाप्तिहेतुत्वादाचारः पूर्वमीर्यते । आचारस्यान्यथात्वे तु प्रायश्चित्तगवेषणं । इहाचारे त्रयोऽध्यायाः प्रायश्चित्ते नवेरिताः । भवनारश्चतुर्वर्णधर्मौ साधारणेतरौ । शिष्टाचारान्हिके तत्र धर्मौ साधारणौ मतौ । षट्कर्मक्षितिरक्षाद्या वर्णाः साधारणाः स्मृताः । आचारे प्रथमाध्याये त एतेऽर्थाः प्रकीर्तिताः । कृष्यादिजीवनोपायो द्वितीयेऽध्याय ईरितः । चतुराश्रमधर्मास्तु सूचिता आश्रमोक्तितः । उक्तौ तृतीय आशौचविस्तारश्राद्धसङ्ग्रहौ । अध्यायत्रयगा अर्थाः प्रोक्ता आचारकाण्डगाः । तुर्ये प्रकीर्णपापस्य प्रायश्चित्तं प्रपञ्चितं । प्रसङ्गात्तुन्नेदादि प्रोक्तं च परिवेदनं । प्रकीर्णाशेषः संस्कार आहिताग्नेश्च पञ्चमे । मलावहे च संकीर्णकरणे चोपपातके । प्रायश्चित्तं षष्ठ उक्तं शुद्धिश्चात्रे रसेषि च । अवशिष्टद्रव्यशुद्धिः सप्तमाध्याय ईरिता । प्रायश्चित्तं गोवधे च सप्तमन्येनाष्टमे स्मृतं । रोधनादिविशेषेण नवमे तदुदीरितं । अगम्यागमने प्रायश्चित्तं दशम ईरितं । अभोज्यभोजनादौ तदेकादश उदीरितं । द्वादशः परिशेषः स्यात्काण्डयोरुभयोर्द्वयोः । "

II. Bṛihatpárášara (A and C) consists of twelve chapters, mostly in the Anushṭubh metre.

Ch. I.—Has 62 verses; opens with the sages headed by Vyaśa going to Paráśara, and requesting instructions from him. Thereupon Paráśara describes the different Yugas; detailing the evils to which the present age is subject. Verses 48 to 60 state in brief the substance of the whole work that follows. Verses 61 and 62 state that Suvrata composed the present work with the permission of Paráśara. Verse 62 is in the Upendravajra metre.

Ch. II.—Consists of 479 verses; lays down the six duties of the twice-born in v. 7; then gives details with regard to the first of them, viz. *sandhyá* or prayers offered at stated times of the day; vv. 86 to 223 lay down the minute ritual enjoined during bathing the second duty; vv. 224 to 364 lay down rules with regard to *japa* (recitation of sacred texts)—the third duty; vv. 365 to 408 lay down the details of the fourth duty, viz., *púja* or worship; vv. 409 to 447 relate to the fifth duty, viz., the *vaiśvadeva* (offering to the fire-gods), and vv. 448 to 465 to the sixth duty, viz., *Átithya* or hospitality; vv. 466 to 479 relate to duties of the several classes. The following metres are here met with:—Vasantatilaká (see vv. 221, 395, 396), Indravajrá (see v. 255, 256, 264, 266, 268, 407, 465), Upajáti (see vv. 265, 267, 269, 364), Upendravajrá (see vv. 362, 446), and Indravanešá (see v. 222).

The following personages are referred to in this chapter :—
Gobhila (see v. 49); Aruṇa (see v. 73); Yájñavalkya (see vv. 79, 249); Manu (see v. 86); Sanaka (v. 168); Sanandana (v. 168); Sanatkumára (v. 245).

The *Pancharátra* is alluded to in v. 397; v. 62 gives the seven sages of the present age of Vaivasvat Manu, in a certain order which is not the one given in the Bhágavata Puráṇa *skandha* viii., ch. xiii. v. 5.

Ch. III.—Contains 184 verses, professes to lay down the duties of a householder in all the four classes (see v. 1), but as a matter of fact permits agriculture to Bráhmaṇas, and gives minute directions. Cattle as necessary helps to agriculture are exalted to the rank of deities, and are enjoined to be carefully tended (see down to v. 57). The rest of the chapter gives directions in regard to ploughing, sowing, setting apart of certain portions of the produce to different sylvan deities and the king and his officers; and to performing sacrifices. Verses 49 to 52 and 55 to 57 are in the Indravajrá metre.

Ch. IV.—Contains 372 verses, commences with the eight forms of marriage, gives the qualifications of the brides and bridegrooms, the duties of wives towards husbands, and of husbands towards wives; the five daily sacrifices, and a long dissertation about the suppression of breath enjoined in the Yoga philosophy. Then follow general rules of daily conduct, the different *Samskáras* or ceremonies, the duties of a Brahmachárin, the three kinds of *Snátaka*, the desirability of having issue, the commandment as to constant purity, gifts to be made to learned men, prohibition of flesh-eating, purification of things, interdiction of common boarding, and general devotions. Manu is quoted without being mentioned (see vv. 52, 57, 170, which correspond to Manu ch. ix. v. 14; ch. ix. v. 3; and ch. ix. v. 8 respectively).

Ch. V.—Contains 390 verses; and relates to oblations to the manes. Ásvaláyana in v. 42, Gautama in v. 52, and Saunaka in v. 120 are referred to. Gayá Śráddha is mentioned in v. 283.

Ch. VI.—Contains 339 verses, and relates to impurities on account of birth and death. It refers to a *parshad* or diet which is the final judge in all matters of civil law, and lays down penances for various offences. The mention of Agastya at the beginning seems, at present, to be inexplicable. Manu is referred to in vv. 46, 58; and Yajñavalkya and Vasishṭha in v. 58. Pilgrimage to Rameśvara is referred to in v. 93. An oilman and a toddy-drawer are mentioned as distinct castes in v. 245. The Mahábhárata story of Indra's killing Triśiras (see Udyoga Parva 5 ch. ix.) is referred to in v. 316.

Ch. VII.—Contains 42 verses which lay down the different *vratas* or penances, among which one named *Brahma Kúrcha* is mentioned, and this is by imbibing the ordinary Pañchagavya.

Ch. VIII.—Contains 376 verses, relating to gifts of a cow, the skin of an antelope, gold, and the like.

Ch. IX.—Consists of 336 verses, laying down the ritual of the different *Sánti* ceremonies in honor of Vináyaka, the planets, and Rudra; others in consecration of wells and tanks; others still styled *Laksha homa* and *koṭihoma*, &c.

Ch. X.—Contains 145 verses, lays down the duties of a king, and those of the different orders.

Durvásas is referred to in v. 115.

Ch. XI.—Consists of 29 verses, and relates to the four orders.

Ch. XII.—Contains 195 verses, relates to *Práṇyáma* or suppression of breath and concentration. The last verse states that the total number of verses in the work is 3,300, and that Suvrata is its compiler.

*Remarks*:—I am inclined to think that this work is an expansion by Suvrata of the original Paráśara's Samhitá—for (I.) if this had been the original and the other work its abridgment, it is unlikely that Mádhav should have taken no notice of that fact; (II.) its diffuse style and the wholesale quotations go to show that the smaller work was taken as the basis by Suvrata and supplemented with long extracts from the Puráṇas [1]; (III.) the sectarian tinge is marked in the work, whereas it is absent in the Paráśara Samhitá. Although the number of chapters is the same, yet there is no similarity in the contents.

*General Remarks.*

Paráśara's work is expressly intended to supersede Manu and Yájñavalkya as having become unsuitable to the age owing to lapse of time (see v. 23 ch. i. of Paráśara Samhitá, and vv. 59 to 61 ch. vi. of the Bṛihat Smṛiti). Paráśara treats of *A'chára* (ceremonies) and *Práyaschittá* (penance) alone; but this omission to refer to the civil law is not, in my opinion, due to the absence of its development at the time as it is in the earlier law-givers like Atri. Adverting to that subject, Paráśara says that certain questions are to be determined by the decisions of a *Parshad* or an assembly of the learned. I interpret this statement to mean that Paráśara found the civil law of the Smṛitis so considerably modified by usage that he felt it unsafe to refer his readers to those works, and therefore invested the verdicts of *Parshads* or conclaves of the learned versed in the current usages of the country with great authority. On the other two branches whereon he has delivered himself, his law is certainly a later development, seeing the minute details in the ceremonial and the abatement of stringency

[1] The existence of such vocatives as नृप in v. 473 ch. ii and द्विज, द्विजश्रेष्ठ, विद्विन् in the eighth chapter is inconsistent with the professed character of the work as a dialogue between Paráśara and several sages.

in respect of penances observable in his work. Agriculture is not only permitted here to the higher classes under emergency, but a series of directions about it are given, and a ceremonial laid down, a conformity with which excuses a resort to agriculture by the twice-born even in ordinary circumstances. Verses 467 to 469 in ch. ii. of the Bṛihat Paráśara lay down six duties for each of the three twice-born classes, thereby showing that the contest of the Kshatriyas and Vaiśyas for having the same duties assigned to them as to Bráhmaṇas had commenced long before Paráśara, who attempts to please them by allowing them the same number, though different in detail.

Paráśara is named in the work as वासिष्ठज, शक्तिपुत्र, व्यासपितृ, and सत्यवतीपति, thus giving an account of the author enough to identify him with the Paráśara mentioned in the Mahábhárata Ádiparva ch. 178, and the Matsya Puráṇa ch. 200. The illustrious son of this Paráśara named Kṛishṇa Dvaipáyana is the last Vyása or arranger of the Vedas in the present Manvantara (see Devi Bhágavata skandha i. ch. iv., and the Bhágavata Puráṇa, sk. i., adh. iv., vv. 19—24; Id. sk. xii. adh. vi., vv. 48—62).

The word *Paráśara* occurs in the Gaṇapáṭha of Páṇini in the Gaṇa named Gargádi.

Paráśara is one of the seven seers of Vedic hymns in the family of Vasishṭha (see Matsya Puráṇa ch. 144); and some descendant of his named Párášarya is a *pravara* of one of the four branches of Vasishṭha's descendants.

Certain Yajurvedi Bráhmaṇas now residing at Nasik are surnamed Paráśare.

There is an Upa-Puráṇa attributed to Paráśara, and two astronomical treatises by the same sage are extant.

---

## *Vyása.*

There are three works under the name of Vyása :—I., Laghu Vyása-Samhitá; II., Vyása Samhitá; and III., Vyása Smṛiti.

I.—Laghu Vyása Samhitá (A) consists of two chapters and 126 verses. The first chapter contains 31 verses relating to the daily rites and duties of a Bráhmaṇa. The great virtue of bathing in the morning as destructive of all sins is specially dwelt upon, and Kapila is quoted as an authority for a bath by wiping the body with a wet garment. The different kinds of bathing follow, and the chapter ends with a command for muttering the sacred Gáyatri verse. The second chapter, consisting of 95 verses, begins with the performance of the daily sacrifices to the domestic fire, the teaching of the Vedas, bathing and prayers at midday, and the offering of water oblations

to the gods, the manes and the sages, &c. The worship of Śankara, the sun, and Madhusúdana (an incarnation of Vishṇu) and Brahmá is enjoined. Manu Prajápati is referred to in v. 71. After the ordinary rites of the day, the five great sacrifices are mentioned and rules laid down for meals.

*Remarks.*—It is quite evident that this work is an extract from some larger work on ritual alone, not necessarily a Smṛiti; for the work without anywhere mentioning Vyása gives it as the utterances of several sages, not mentioning where and when they were delivered.

II.—Vyása Samhitá (A and B) consists of four chapters, containing 241½ verses.

Ch. I.—Begins by a number of sages proceeding to Veda-Vyása at Benares, and requesting him to expound to them the arrangement of classes. He then defines the country of the black antelope as one where *dharma* deserves to flourish, and v. 5 distinguishes the three twice-born classes only as those fit for all the duties laid down by the Vedas, the Smṛitis, and the Puráṇas, and no others. The writer apparently recollects what the same Vyása has laid down both in the Mahábhárata and the Bhágavata; for in the very next verse and the following verses the rites of the Súdras except the Vedic rites are laid down. In the next few verses the mixed classes are described; and afterwards all the rites peculiar to the twice-born up to marriage are laid down.

Ch. II.—Consisting of 55½ verses, begins with the duties of a *Snátaka*, and rules are laid down with regard to the choice of a wife. Verses 10 to 15 lay down rules for the choice of the first wife. 'The Vedas,' says he, 'lay down that the wife is half the man's body, and therefore amongst the different classes, the wife should be chosen from the same class, or at least the eldest.' Minute directions are laid down for the domestic duties of the wife, and her constant dependence on her male relatives, down to following her husband's corpse to the funeral pile.

Ch. III.—Consisting of 73 verses, begins with a threefold division of the duties of a householder into *Nitya*, *Naimittika* and *Kámya*, and gives directions for morning prayers before and after bathing, offering water to the manes and deities, and the sacrifices to the fires, either Vedic or the ordinary fire according to the ritual laid down by Śákala. Instead of one handful, sixteen handfuls of food are ordered to be left near the house for the propitiation of spirits and outcasts. The entertainment of guests is afterwards laid down. Somewhat inconsistent provisions in regard to

flesh-eating are laid down, and onions, white brinjals, red radishes, &c. are prohibited, apparently on received tradition. Directions for dining in certain dishes, and the entertainment of guests in the evening, conclude the chapter.

Ch. IV.—Consisting of 71 verses, begins by extolling the order of the householder, and lays down rules for different kinds of gift, and enjoins a man not to live for himself. Verses 41 to 45 give the different definitions of a Bráhmaṇa. A number of verses are extracted from some moral works, and the last 8 verses condemn the intercourse of a Bráhmaṇa with a Śúdra either by way of food, or gift, or otherwise.

*Remarks.*—Neither this nor the above work of Vyása contains any mention of Vyavahára in any one of its eighteen sections; whereas verses from Vyása on Vyavahára are quoted by modern digest writers, such as Hemádri and Nílakaṇṭha.

Verse 18 ch. i. enjoins conformity with family usage in respect of *Chúdákarma* or tonsure.

A Smṛiti under the name of Bṛihad Vyása appears from copper plates to have existed, where the following verse often appears :—

बहुभिर्वसुधा भुक्ता राजभिः सगरादिभिः ॥ यस्य यस्य यदा भूमिस्तस्य तस्य तदा फलम् ॥

III. Vyása Smṛiti (C and D) contains 69 verses, and appears to be an incomplete copy of the fourth chapter of the Vyása Samhitá above-mentioned. It has some gaps, which exactly correspond in C and D, showing that these compilations belong to the same family.

*General Remarks.*

It appears that there were two authors of the name of Vyása, who are distinguished by Hemádri as Vyása and Veda Vyása. The opening verse in Vyása Samhitá indeed ascribes it to Veda Vyása, but no extracts taken by Hemádri in his Dánakhaṇḍa from Veda Vyása are to be found in this work.

Vyása is named Kṛishṇa Dvaipáyana, because he was born in an island in the Yamuná (see Mahábhárata Ádiparva ch. 60) and Bádaráyaṇa, because he resided in a hermitage in the Badarí Forest. He is also known as Veda Vyása, because he divided the Veda into its present four divisions, (see Bhágavata skandha i. ch. iv., v. 19; skandha iii. ch. iii. and skandha xii. ch. vi.). He was born of Satyavatí by Paráśara before Satyavatí was married to Śantanu. Paṇḍu and Dhṛitáráshṭra were his sons born of the widows of Vichitravírya. His son Śuka read the whole Bhágavata to King Paríkshit. He is said to have composed eighteen Puráṇas, the Sútras of the Uttara Mímámsá, and a Smṛiti.

## *Śaṅkha.*

I. Śaṅkha Samhitá (A and B) consists of 18 chapters containing 318 verses.

Ch. I.—Consists of 8 verses, and describes the proper duties of the four classes for whose benefit Śaṅkha made this Śastra.

Ch. II.—Consists of 12½ verses, and describes the mode of designating the four classes; ordains that the ceremony of tonsure should be made according to family usage, and mentions the time for carrying the student to his preceptor for learning the Vedas.

Ch. III.—Contains 18 verses, and describes the life of a student, ending with a present of Dakshiṇá, after which he is to bathe before marriage.

Ch. IV.—Contains 16 verses, and describes the marriage rite and the different kinds of marriage. It lays down three wives to the Bráhmaṇa, two wives to the Kshatriya, and one to the Vaiśya and Śúdra; and says that the twice-born are not to marry a Śúdra wife even when in distress.

Ch. V.—Containing 18 verses, describes the different sacrificial and domestic fires.

Ch. VI.—Contains 7 verses, and describes the third order, on which the Bráhmaṇa is to enter on approaching old age.

Ch. VII.—Consists of 33½ verses, and describes the life of an ascetic and meditation on the supreme spirit.

Ch. VIII.—Consists of 14½ verses, and lays down rules for bathing.

Ch. IX.—Consists of 19½ verses, and lays down rules on sipping water and prayers.

Ch. X.—Contains 6 verses on the retention of breath for the purpose of destroying sin, and the repeating of certain *Súktas*.

Ch. XI.—Contains 17½ verses and one prose passage relating to the importance and virtue of the *Gáyatrí*.

Ch. XII.—Contains a prose passage and four verses, all on libations of water.

Chs. XIII. and XIV.—Contain 25½ and 7 verses respectively, relating to the *Śráddha* ceremony. Yama is referred to in the last verse of ch. XIII.

Ch. XV.—Contains 24 verses, gives rules for observing mourning, quoting Yama in v. 19.

Ch. XVI.—Contains 22½ verses, gives directions for removing different kinds of impurities from different objects.

Chs. XVII. and XVIII.—Containing 61½ and 14 verses respectively, relate to penances. Yama is referred to.

*Remarks.*—This same work is found in C as Vriddha Śaṅkha and in D imperfectly to the end of the 8th chapter.

Śaṅkha is mentioned in the Dhatupátha of Páṇini in the gaṇa named Aśvádi. There is a *Śákhá* of the Ṛig-veda extant named Śáṅkháyaní, which is named after a descendant of Śaṅkha.

---

## *Likhita.*

The Likhita Samhitá (A, B, C, and D) consists of 92 verses, and is an unsystematic collection of rules on sacrifices and *púrta* (works of public utility),[1] the former being assigned to the twice-born and the latter to the Śúdras, and rules on oblation to the manes, marriage, penances for different sins, impurities, &c. Yama is referred to in v. 29.

*Remarks.*—This same work is again found in C under the name of Laghu Śaṅkha, with large omissions, the total number of verses there being 72.

Likhita is seldom quoted by himself, and yet the joint production of Śaṅkha and Likhita was at one time considered to have the highest authority.[2] A story is mentioned of this Likhita in the Mahábhárata, where he is mentioned as the junior brother of Śaṅkha. These brothers lived in separate hermitages, on the banks of the Báhudá river, and one day when Śaṅkha was abroad, Likhita happened to repair to his brother's hermitage. Finding good fruit in Śaṅkha's garden, he freely took them, and was eating them, when his brother returned. Śaṅkha rated Likhita for having eaten his fruit without permission, and told him to go to king Sudyumna, and seek punishment at his hands for the offence of theft. Likhita accordingly went to the king, and made the request. But the king would not grant it, saying that he would exercise his prerogative of granting pardon. Finding Likhita inexorable in his demand for punishment, the king at last cut his hands off. Likhita then went to Śaṅkha, who restored his hands to him by making him bathe in the Báhudá river.[3] Vyása's narrating this anecdote as an ancient account would take back the brother legislators Śaṅkha and Likhita to a considerable period of antiquity. It seems that the brothers composed each by himself a work on law, and then jointly wrote on the same subject. This joint production was in prose, because extracts taken therefrom in the Vyavahára Mayúkha[4] and other

---

[1] It is thus defined by Manu according to the Vachaspatya :—

वापीकूपतडागादिदेवतायतनानि च । अन्नप्रदानमारामः पूर्तमित्यभिधीयते ॥

[2] See. v. 23 ch. i. in Parásara Samhitá (Part II. p. 3) :—

कृते तु मानवो धर्मस्त्रेतायां गौतमः स्मृतः । द्वापरे शाङ्ख लिखितः कलौ पाराशरः स्मृतः ॥

[3] See the Mahábhárata Śánti Parva ch. xxiii. (l. 21 pp. 1, 2).

[4] See above part i. p. 34 l. 13 ; p. 35. l. 4 ; p. 49 l. 5 ; p. 64 l. 4 ; and p. 94 l. 12.

works are in prose. This work is not seen in any of the four compilations used by me in this review.

---

*Daksha.*

The Daksha Samhitá consists of 200½ verses, and in A and B is divided into seven chapters, while it is one continued piece in C and D.

Ch. I.—Contains 15 verses, lays down general duties of the four orders, and strictly prohibits passing any period of life without being in some one of the four orders.

Ch. II.—Contains 53 verses, and gives rules for the daily conduct of the twice-born. The day is divided into eight parts, the first of which is to be devoted to cleansing and bathing the body, and the recitation of prayers; the second to the study and teaching of the Vedas; the third to the means of obtaining livelihood for himself and his family and retainers; the fourth again to bathing and prayers; the fifth to the distribution of food among gods, manes, guests and his own family; the sixth and seventh to the hearing of Puráṇas and Itihása (a history); and the eighth to worldly affairs and the evening prayers. Of the night, the first half should be spent in recitation of the Vedas, and the other half in sleep.

Ch. III.—Contains 31 verses, lays down the nine good and the nine bad acts, the nine secrets, the nine things that may be freely declared, the nine things that ought not to be given, and enjoins industry and gifts to proper individuals.

Ch. IV.—Contains 20½ verses, and describes a virtuous and a bad wife, and the consequent happiness or misery on having Súdra wife respectively. Suttee practice is alluded to in vv. 18 and 19.

Ch. V.—Consists of 13 verses, laying down rules for cleanliness and enjoining their peremptory observance.

Ch. VI.—Contains 19 verses, and lays down rules for impurity on account of birth and death. The use of one word, viz., *sútaka* for both kinds of impurity in v. 1 appears to mark the middle stage which prepared the way for its improper application at present to impurity on account of death exclusively. In v. 7 one who is a Bráhmaṇa by caste, but not so by his actions, is mentioned.

Ch. VII.—Contains 49 verses, laying down what constitutes *Yoga*, and the different duties of an ascetic.

*Remarks.*—Colebrooke says: "Heroic history notices two personages of the name of Daksha, one son of Brahmá, and the other son of

Práchetas. A similar legend on the marriage of their daughters, and which is evidently allegorical, is told of both; it does not appear certain which of them is the legislator; however, a law treatise in verse is dignified with his name" (see his Essays, vol. I. p. 469). Now no warrant is given for the statement that 'similar legend on the marriage of their daughters is told of both'; while a reference to the Bhágavata skandha iv. chapters i. to v. on the one hand, and Bhágavata skandha vi. chapter v., and Matsya Puráṇa chapter v. show that they were distinct individuals, the one being styled Prajápati Daksha, whose daughter Satí was married to Śiva, and the other being called Práchetasa Daksha, one of whose daughters Aditi was given in marriage to Kaśyapa. The first verse distinctly styles the author of this work as Daksha Prajápati, so that one acquainted with the Puráṇic history of the Hindus could never confound him with the Práchetasa Daksha. On reading the work, however, I find that its claim to such antiquity is untenable. The *dvaita, advaita* and the *dvaitá-dvaita* doctrines are referred to in v. 44, and it is stated by Yajñeśvara Śastri in his Árya Vidyá Sudhákara on the strength of a work known as Sampradáya Pradípa that the propounders of the *dvaita* doctrine flourished subsequently to Sankaráchárya about the thirteenth century of the Samvat era (see pp. 228, 231, and 234). There is however no doubt about the genuineness of this production, for all the references to Daksha made by Hemádri in his Dánakhaṇḍa, and by Nílakaṇtha in his Vyavahára Mayúkha, are met with in this work.

The work has no reference to the civil law, nor does Daksha appear to be anywhere quoted on the subject.

---

*Gautama.*

There are two works ascribed to Gautama, viz., a Gautama Samhitá and Vṛiddha Gautama Samhitá.

I. Gautama Samhitá (A, B, C and D) is in prose entirely, and is divided into 29 chapters, one of which, viz., the 20th, is omitted in C and D. The Mitákshará of Haradatta contains no comment on the said 20th chapter; and so far supports the text in C and D.

Ch. I.—Commences with laying down the authority of the Vedas and the works and practices of the Smṛiti writers, then speaks of the periods for *Upanayana* for different classes, and lays down general rules of conduct for the Áryas.

Ch. II.—Lays down the duties of men before and after *Upanayana*; and speaks of *Samávartana* at the end of the studentship.

Ch. III.—Describes in brief the duties of a *Brahmachárin* (student), a hermit and an ascetic.

Ch. IV.—Lays down the different forms of marriage.

Chs. V. to VII.—Lay down the duties of a householder in detail, and the avocations permitted to a Bráhmaṇa, when in distress.

Ch. VIII.—States the privileges of a Bráhmaṇa who is learned, who has forty *Samskáras* and eight *Átmaguṇas* performed on him, and who knows the *Samayáchára*, or the customs of the people. The *Samskáras* and *Átmaguṇas* are then named and detailed.

Ch. IX.—The duties of a householder are resumed.

Ch. X.—Describes the duties and the privileges of the different classes.

Ch. XI.—Gives in detail the duties of a king.

Ch. XII.—Relates to punishments to be imposed by the king for different offences.

Ch. XIII.—Speaks of the duties of witnesses and the consequences of lying.

Ch. XIV.—Relates to the impurity on account of death and birth.

Ch. XV.—Relates to oblations to the manes.

Ch. XVI.—Lays down the proper and improper times of the study of the Vedas.

Ch. XVII.—States what articles are fit and unfit to be eaten.

Ch. XVIII.—Duties of women are laid down.

Ch. XIX.—Lays down generally the nature of penances.

Ch. XX.—Describes how certain sinful actions in the past life produce certain bodily defects and diseases, in order that the person affected by those diseases may be able to perform the appropriate penances. This chapter is omitted in C and D.

Ch. XXI.—Lays down the manner in which persons are to be excluded from all intercourse.

Ch. XXII.—Lays down the offences which degrade a man.

Ch. XXIII.—Gives the penances for homicide.

Ch. XXIV.—Do. for drinking spirituous liquors.

Ch. XXV.—Lays down secret penances for unproclaimed offences.

Ch. XXVI.—Describes penances for secondary sins.

Chs. XXVII. and XXVIII.—Define the different *Kṛichchhra* and the *Chándráyaṇa* penances.

Ch. XXIX.—Relates to the civil law on the subject of inheritance without anything like arrangement being observed.

*Remarks.*—This is the work of Gautama which has been referred to frequently by Nílakaṇṭha in his Vyavahára Mayúkha, and is the subject of a commentary by Haradatta called the Mitákshará. The general style of the work leaves no doubt on my mind but that the work is very

ancient. I am even inclined to place this digest of Gautama before the present compilation of Manu's institutes by Bhṛigu. It must be clearly understood that I am laying down no general proposition with regard to the relative ages of Manu and Gautama themselves. As to that, Manu's priority to every other legislator is so universally admitted that I should hesitate before contradicting it. My contention, however, is that this circumstance is not inconsistent with Gautama's having promulgated his institutes, (whether in their present form or not I cannot yet positively say) before Bhṛigu's compilation of Manu was published; for although Bhṛigu styles himself as the immediate disciple of Manu, yet the work itself furnishes abundant evidence to show that considerable time had elapsed after Manu, before Bhṛigu undertook to collect and arrange his institutes. The most cogent argument in support of this position is supplied by the evidence of the language of Bhṛigu's compilation, which is quite classical; while Manu, whose institutes he professes to epitomize, is a Vedic personage[1] mentioned in a work which is written in Vedic Sanskṛit.

I base the claim of Gautama to the said antiquity on the following considerations: I.—Every chapter ends with the last word invariably repeated. As the commentator Haradatta explains, and as my knowledge of the way in which the Bráhmaṇas and Sútras are recited by Vaidikas to this day, warrants the inference that this repetition is intended merely to mark the end of a chapter. Such a contrivance for this purpose plainly speaks of a time when the work in its present form was addressed to *hearers* and not to *readers*. The same cannot be said of Bhṛigu's version of Manu. II.—There is one earlier legislator that has been referred to by Bhṛigu under the name of *Utathya-tanaya* (son of Utathya) and explained by Kullúka to be Gautama (see Manu ch. iii. v. 16). III.—Municipal law both in its civil and criminal branches is in a much less developed state in Gautama than in Bhṛigu. IV.—The three classes of the twice-born are separated by wider gulfs in Bhṛigu's time than in that of Gautama, for Gautama as a rule lays down ordinances without making distinctions such as are observed in Bhṛigu. Compare for instance Bhṛigu's allotment of the eight kinds of marriage to the four classes, (see Manu ch. iii. vv. 22—26), with the deliverance of Gautama on the subject in ch. iv., where, after enumerating the eight kinds of marriage, he has no remark to make save that the four first according to some, and the six first according to others, are the approved forms. V.—The absence of that systematic arrangement in Gautama which is observable in Bhṛigu is an argument in the same direction. VI.—The primary position among the four orders being assigned by Gautama to the order of the householder (see ch. iii.), and

[1] See the Taittiríya Samhitá II. 2, 10 and the Chhandoga Bráhmaṇa.
मनुर्वैयत्किंचिदवदत्तद्भेषजं भेषजताया इति.

*pratigraha* (acceptance of a gift) being mentioned by him as the least efficacious duty of a Bráhmaṇa which was to be availed of in the last resort under distress (see ch. vii.), indicate a society more energetic and progressive than that depicted by Bhṛigu.

It is usual in this work to note dissenting opinions by the words *ityeke* (so [say] some), so that *dharmaśástra* was a topic of discussion even before Gautama.

II. Vṛiddha Gautama (A) consists of twenty-two chapters.

Ch. I.—On the enquiry of some hearer, Gautama narrates a dialogue between Yudhishṭhira and Krishṇa. Yudhishṭhira requests instructions on *dharma* sacred to Vishṇu. Krishṇa begins by expatiating on the observance of *dharma*; and states some of his own attributes. The chapter consists of 72 verses.

Ch. II.—Consists of 42½ verses; and states what acts on the part of the different classes secure to them eternal bliss.

Ch. III.—Contains 93 verses, states proper and improper recipients of gifts; and lays down that the best passport to heaven is gifts to a Bráhmaṇa.

Ch. IV.—Contains 58 verses, and states the observances whereby a Bráhmaṇa emancipates himself and others from eternal perdition.

Ch. V.—Contains 123½ verses; and relates the horrors of the passage from this world to the regions of Yama and of the punishments there inflicted. Yudhishṭhira gets frightened at the account, and enquires after the means of salvation. Gifts of various kinds and devotion to Vishṇu or Śiva are enjoined for the purpose.

Ch. VI.—Contains 174 verses. Different gifts are again mentioned, among which is that of land; and in connection therewith the texts of Bṛihaspati and Vyása are quoted (see vv. 127 and 136 in part II. page 541).

Ch. VII.—Contains 134 verses, and states the merit of giving a pair of bulls, and the worship of sacrificial fires, and *práyopaveśana* (abstaining from all action in view of death), and contemplating on the divine essence.

Ch. VIII.—Contains 120½ verses, mentions the five great sacrifices, the observances at the time of bathing, the kinds of flowers acceptable and objectionable to gods, the worship adopted by Vaikhánasa and the followers of the Pancharátra; and the vices in the different castes.

Ch. IX.—Contains 84 verses, and lays down the rules with regard to the gift of a *kapilá* cow.[1] The last 9 verses are in the Upajáti metre.

[1] For the various kinds of *kapilá*, see the Dánachandriká (l. 20 p. 1.) quoting Varáha Puráṇa on the subject.

Ch. X.—Contains 120 verses, and states further rules with regard to the gift of a *kapilá* cow, the proper times for different observances, proper and improper persons for invitation at a *Śráddha*, and acts which lead to heaven and to hell.

Ch. XI.—Contains 37 verses, and mentions acts which are considered equal to the slaying of a Bráhmaṇa, the merit of feeding people, the persons whose food should not be partaken of, and the different merits of different gifts.

Ch. XII.—Has 52 verses, and lays down the duties of an ascetic, the proper recipients of a gift, and the merit of feeding people.

Ch. XIII.—Contains 34 verses, gives directions as to the taking of meals; and states the merit of offering grass to cows and giving sesamum and śugarcanes.

Ch. XIV.—Contains 66½ verses; commences with the exemptions of men from the performance of ordinary duties when in distress; states the qualification of a good Bráhmaṇa, and professes to give a summary of *dharmaśástra* by referring to Manu and the sources of law.

Ch. XV.—Contains 98½ verses; treats of the different sacrifices to the domestic and the Vedic fires, stating amongst other things that everything under the sun is made for sacrificial purposes.

Ch. XVI.—Contains 48 verses, and describes the *chándráyaṇa* penance.

Ch. XVII.—Contains 58½ verses, and states the merit of being an *ekabhukta* (one who takes meals once during twenty-four hours) in the several months of the year.

Ch. XVIII.—Contains 48½ verses, states the merit of having a single meal during the day throughout one year; and of observing fasts on the twelfth lunar days of the several months.

Ch. XIX.—Contains 45 verses, and states the merit of gifts during an eclipse, a *vyatípáta*, &c. and of the sight of *Asvattha* (*Ficus religiosa*). Acts which reduce a Bráhmaṇa to the position of a Śúdra are enumerated.

Ch. XX.—Contains 47½ verses, and states the different means of salvation.

Ch. XXI.—Contains 32½ verses, inculcates faith, and advises respect being paid to the votaries of God and to the followers of those votaries.

Ch. XXII.—Contains 47½ verses, states that there is nothing more repulsive to God than the recitation of the Vedas by the Śúdra; and that the best way to attain salvation is to worship God in real faith.

After this, the assembled audience parted; Krishṇa went to Dváraká, and Yudhishṭhira followed the rules laid down in this work.

*Remarks.*—I confess I do not see why this work is styled Vṛiddha Gautama; for there is nothing common between it and the Gautama Samhitá, either in style or subject matter. I am indeed puzzled as to why the present work should even be named after Gautama; for the whole work is a dialogue between Krishṇa and Yudhishṭhira, and Gautama is connected with it only as narrating the dialogue[1] (it does not appear to whom). The existence of a *Vṛiddha* Gautama and a *Śloka* Gautama (a metrical Gautama) is indeed indicated by extracts made from them in the Vyavahára Mayúkha, the Acháramádhava, and Hemádri.[2] But none of those references are to be met with in this work, so that I have very little doubt this work is entirely different. An examination of its contents shows that it omits all mention of *Vyavahára* and *Práyaschitta*, and touches on *Áchára* alone, and that too very meagrely. The different duties of the classes, including the duties of the king, and the orders, the different *samskáras*, and the like branches of ritual are all passed over, while the subject of gifts is dilated upon to a disproportionate extent. The work seems to be made up from the different Puráṇas,[3] where the subject of dharmaśástra is very partially noticed. That it is a recent work is clear from its mentioning the Vaishnava sects of Vaikhánasa and Páncharátrika (see v. 88 of ch. viii.) and the *Vyúha* of Rámánuja (see v. 93 of ch. viii., and compare the Sarvadarśana Saṅgraha p. 55). It is evidently sectarian; for it professes to give the *Dharmas* sacred to Vishṇu alone, and is styled at the end of each chapter as a *Vaishṇava Dharmaśástra*. The author of it, however, was a very tolerant Vaishṇava; and gives to Śiva as high a position as to Vishṇu (see ch. iii. vv. 17 and 30; ch. v. vv. 122 and 124; ch. vii. v. 125).

*General Remarks.*

In regard to the age of the author of this Smṛiti we have no means to ascertain exactly which Gautama it was who composed the present Smṛiti. There are several Gautamas mentioned in the Mahá-

---

[1] See the first two verses :—

अश्वमेधे पुरा वृत्ते केशवं केशिसूदनम् । धर्मसंशयकं दृश्य किमपृच्छत गौतम ॥
गौतमः । पञ्चमेनापि मेधेन यदा रमातो युधिष्ठिरः । तदा राजा नमस्कृत्य केशवं वाक्यमब्रवीत् ॥

[2] Let me here note that quotations from Vṛiddha Gautama, that have been noticed by me, show that work also to be metrical; so that I do not know that Śloka Gautama may not be another name for Vṛiddha Gautama. I have however mentioned them above as distinct because the Dánakhaṇḍa of Hemádri quotes, from both Vṛiddha Gautama and Śloka Gautama (Hemádri: pp. 438, 472, 636, 699, 742, 757, 1029 1039, for Vṛiddha Gautama; and p. 91 for Śloka Gautama: Cal. Ed., Samvat 1930).

[3] See for example vv. 47 to 51 in chapter ix. of Vṛiddha Gautama which in the Dánachandriká of Divákara (see I. 20 p. 1) are referred to Váráha Puráṇa.

bhárata and the Rámáyaṇa. There is one Gautama who is one of the *Saptarshis* (seven sages) for the present *Manvantara* or age (see the Bhágavata Puráṇa skandha viii. ch. 13 v. 5, and Áśvaláyana Śrauta Śútra p. 891).[1] His wife's name was Ahalyá. His son was Śatánanda, who was the priest of Síradhvaja, king of Mithilá of the Janaka dynasty, who was the father-in-law of Ráma, son of Daśaratha. The hermitage of this Gautama was in the vicinity of Mithilá (see v. 11 ch. 48 Bálakáṇḍa Rámáyaṇa). Further on in the Rámáyaṇa Uttarkáṇḍa ch. lxxiv. v. 4, one Gautama is mentioned as residing at the court of Ráma; and is likely the same as the one above mentioned. It is a pity that the ancestry of this Gautama is not given in the Rámáyaṇa either in the Bálakáṇḍa chs. 48 and 49; or in the Uttarakáṇḍa ch. 30, where the same story is again referred to. All that can be gleaned from a reference to the enumeration of the *Pravaras* (or distinguished persons of a family), is that Gautama was a descendant of Angiras. There is another Gautama that is described as the twenty-first Vyása or compiler and arranger of the Vedas of the present *Manvantara*, the present Vyása, who is the twenty-eighth in number, being Krishnadvaipáyana (see Deví Bhágavata, skandha i. ch. iv.). There was a third Gautama who appears to have resided on the banks of the Godávarí, probably where Nasik now stands; and after whom that river is named to this day as Gautamí, (see Adhyátma Rámáyaṇa Araṇya káṇḍa sarga iii. v. 47 and Śiva Puráṇa Jñána káṇḍa chs. 50 to 52). A fourth Gautama is mentioned in the Bráhmaṇa of the Black Yajur-veda.[2] There is a fifth Gautama who is said to have resided at the court of a descendant of king Vena, where Atri had gone to request a gift (see Mahábhárata Vanaparva ch. 185). There is a sixth Gautama who is mentioned as one of the sages who surrounded Dyumatsena, the father of Satyavat and the father-in-law of Sávitrí (see Mahábhárata Vanaparva ch. 298). There is a seventh Gautama who is known as the son of a *rishi* called Dírghatamas and nephew to Bṛihaspati (see Mahábhárata Ádiparva ch. 104). This Dírghatamas further appears there as a contemporary of king Bali, son of Sutapa, and a descendant of Áyu of the Lunar dynasty. Another version of this story as given in the Matsya Puráṇa (see ch. 48 v. 53) makes Gautama the younger brother of Dírghatamas. Now although it cannot be definitively said which of these Gautamas was the legislator, yet I presume it is the last who is the author of the Smṛiti. Assuming, as indeed is very likely, that the Gautama mentioned

[1] This text in Asvaláyana with regard to the *Saptarshis* is attributed by the Nirnayasindhu (see parichchheda iii. first half l. 27 p. 1) to Baudháyana on the authority of the Pravaramañjarí; but this opinion has apparently very weak foundation.

[2] It must be noted that it is Gotama and not Gautama who occurs in the Ṛig-veda, or is known under another name of Akshapáda, as the founder of the Nyáya (dialectic) school.

by Bhṛigu was the writer of the Smṛiti, I find that a certain opinion is quoted in Manu ch. iii. v. 16 as being that of *Utathya tanaya* (son of Utathya) who is explained by Kullúka to be Gautama. This is to a certain extent supported by the Áśvaláyana Śrauta Sútra (second half, vi., xi., 1, page 878, Cal.), where he appears as a Pravara Ṛishi descended from Utathya. From the preceding remarks it will also appear that the last Gautama according to one version (viz., that of the Matsya Puráṇa) is the son of Utathya, and according to another, he is the grandson of Utathya; for Dírghatamas and his brother Bṛihaspati were the sons of Utathya. Whatever the value of this conjecture, one thing is certain, that Gautama is one of the oldest law-givers, and had at one time paramount authority as a legislator after the time of Manu.[1]

---

## *Śátátapa.*

There are three works under the name of Śátátapa—viz., a Samhitá, a Smṛiti and a Vṛiddha Śátátapa Smṛiti.

I. Śátátapa Samhitá (A and B) is divided into six chapters.

Ch. I.—Contains 31 verses; opens with a statement that sins are of three kinds, viz., the primary sins, secondary sins, and sins; adds that sins, if unexpiated, result in certain stains on the body, and produce diseases for seven, five and three lives respectively, and that the remedies for sins consist in *japa* (secret repetition of holy texts), worship of gods, sacrifices, and gifts. Then commences a regular diagnosis of several diseases in reference to the patient's acts in a former life; and the different penances and remedies for the same are mentioned. *Nivartana* and *Gocharman* are mentioned as certain measures of land.[2]

Ch. II.—Contains 57 verses, and lays down the evil effects of the slaying of a Bráhmaṇa and the remedies for the same. Harivaṁśa is referred to in v. 30. The present permutations of Rudra, Laghu Rudra, and Mahárudra are referred to in vv. 31 and 32.

Ch. III.—Contains 22 verses, and describes miscellaneous sins, their effects and penances.

Ch. IV.—Contains 32 verses and relates to theft.

Ch. V.—Contains 39 verses and relates to prohibited intercourse with women.

---

[1] See Paráśara Smṛiti ch. i. v. 23 :—

कृते तु मानवो धर्मस्त्रेतायां गौतमः स्मृतः । द्वापरे शाङ्खलिखितः कलौ पाराशरः स्मृतः ॥

[2] See. ch. i. vv. 14 and 15 :—

निवर्तनानि भूदाने दश दद्याद्द्विजातये । दशहस्तेन दण्डेन त्रिंशद्दण्डं निवर्तनम् ॥ दश तान्येव गोचर्मे दत्वा स्वर्गे महीयते.

Ch. VI.—Contains 51 verses, and lays down penances for those who, owing to certain inauspicious kinds of death, are excluded from heaven.

*Remarks.*—The colophon of each chapter styles the work as a Karmavipáka, as indeed the above analysis will show it really is. This does not appear to be the work of Śátátapa, which is often referred to by modern treatise-writers on *Dharmaśástra*.

A Karmavipáka of Sátátapa is described by Dr. Rajendralal Mitra in his 'Notices of Sanskṛit Manuscripts,' vol. II. p. 4; the opening verse whereof tallies with the opening verse of the present work. The colophon of that work shows that it is a dialogue between Vaśishṭha and Bhṛigu, and contains 87 chapters. It appears to me not unlikely that the present work is only a portion thereof, inserted into the Calcutta and Benares compilations of Smṛitis because it bears the name of Śátátapa. The circumstance that the last verse represents this work as addressed by Śátátapa to his pupil Śarabhaṅga, while the other work is a dialogue between Vasishṭha and Bhṛigu, must be admitted to be opposed to the above supposition; unless it be that the said last verse is detached from some other work and wrongly fastened to the work under consideration.

The Puráṇic history furnishes no account of Śátátapa; and the only description we have of Śarabhaṅga is that he was some Ṛishi who met Ráma in the Daṇḍaka forest (see the Rámáyaṇa, Araṇyakáṇḍa ch. v.)

II. Śátátapa Smṛiti (C and D) opens with a prose passage, which is followed by 139 verses. The prose passage begins with penances for certain sins, and ends with an enumeration of secondary sins. Then follow ordinances on marriage, the performance of Vaiśvadeva, hospitality to guests, a few minute details of daily life, oblation to the manes, and penances for certain sins.

*Remarks.*—The mixture of prose and verse in this work is different from that which we see in earlier Smṛiti works; where the main portion is in prose, and verses are almost invariably brought in as extracts from traditional lore to support the statement of law made by the author in prose. In the present work we find a small passage at the beginning in prose, and then follows an uninterrupted series of verses on entirely different topics; so that it is more than likely that the prose passage is a subsequent interpolation into the original metrical work. I have not met with any quotation from Śátátapa, which is in prose; while quotations from the metrical Śátátapa do occur in the Nirṇayasindhu and the Samskárakaustubha (see Nirṇayasindhu *parichchheda* iii., First Part l. 30 p. 1., and l. 159 p. 1 of the Samskárakaustubha).

Verse 100 shows that this work was written after the development of the post-Vedic trinity of Brahmá, Vishṇu, and Śiva.[1]

III. Vṛiddha Śátátapa Smṛiti (C and D) consists of 63 verses; and contains rules on penance, purification, and impurities.

There are two small prose passages after v. 8 and v. 57.

*Remarks.*—This work is clearly not the production of the same author to whom the abovementioned works are ascribed; for the opening verse designates the author as Vṛiddha Śátátapa[2]; and Śátátapa is quoted from in v. 18.[3] Thus the designation of this Smṛiti invalidates two theories advanced in reference to certain names of authors being preceded by Vṛiddha., viz.—I., that the prefix Vṛiddha to the name of an author indicates the same individual at an advanced age (see the comments of the Víramitrodaya on v. 1 of the Achárádhyáya of Yájñavalkya); and II., that the said prefix indicates an earlier personage of the same name.

The opening verse above referred to also shows that the present work professes to be an epitome of Smṛitis and Tantras, and not to be an independent work, and yet it must be considerably old, for Vṛiddha Śátátapa is quoted by Aparárka (see Nirṇayasindhu *parichchheda* iii. First Part l. 14 p. 2) and by Śaṅkaráchárya in his Bháshya on the Vishṇu Sahasranáma.

The present work appears to be incomplete though genuine; for while the reference in the Nirṇayasindhu śráddha chapter l. 37 p. 1 is met with, those in the same work in *parichchheda* iii., First Part l. 14 p. 2 and śráddha chapter l. 38 p. 2 are not.

*Vahnidharma Śástra* is mentioned in v. 43.[4] Does it mean the *dharmaśástra* laid down in the Vahni or Agni Puráṇa? It may be noted that both Agni Puráṇa and Vahin Puráṇa are quoted as distinct works by some writers. (See Hemádri's Dána Khaṇḍa, Cal. ed.)

---

## *Vasishṭha.*

Vasishṭha Samhitá (A, B) consists of 21 chapters,[5] and is mixed prose and verse.

---

[1] The verse runs as follows :—

ब्रह्मा विष्णुश्च रुद्रश्च श्रीर्हुताशन एव च । मण्डलान्युपजीवन्ति तस्मात्कुर्वन्ति मण्डलम् ॥

[2] It runs as follows :—

वृद्धशातातपप्रोक्तं स्मृतितन्त्रविनिश्चितम् । सङ्क्षेपेण प्रवक्ष्यामि यावदर्थोपलब्धये ॥

[3] It runs as follows :—

उदक्या सूतिका चैव ह्यन्त्यजा स्पृशति द्विजम् । त्रिरात्रेणैव शुध्येत इति शातातपोऽब्रवीत् ॥

[4] The verse runs thus :—

पितुः सा भजते गोत्रमूर्ध्वं तु पतितस्तकम् । इति प्रोक्तं पुरा वन्हिधर्मशास्त्रानुसारतः ॥

[5] I have got in my collection a copy of this Samhitá, which contains 28 complete chapters, and leaves the 29th incomplete; while the text of the same Samhitá, as given in the edition published at Benares with a commentary in Sáka 1781, contains 30 chapters.

Ch. I.—Lays down Śruti, Smṛiti and usage of the learned as the sources of law, defines the limits of Aryávarta, and notices two other definitions thereof. Bhállavins[1] are quoted from. Manu is cited as an authority for upholding usages of the country, the class and the family. The five primary sins are mentioned. The Bráhmaṇa is declared to be the head of all the classes, and the king is enjoined to take a sixth of the produce as his share.

Ch. II.—Enumerates the classes and lays down their occupations. The rates of interest to be received from debtors of different classes, and the furthest limits of interest, are laid down.

Ch. III.—Lays down the study of the Vedas for the twice-born, enumerates the felons, describes the duties of a student, and the means of purification for different things. Manu and Prajápati are referred to.

Ch. IV.—Notices the origin of the different classes from the different parts of *Viráj*, as given in the Purushasúkta in the tenth Maṇḍala of the Ṛig-veda. The ceremonies necessary on the advent of a guest, impurities on account of death and birth, and funeral ceremonies are then spoken of. Manu and Gautama are referred to.

Ch. V.—Lays down the duties of women ; gives the story of Indra's killing Tvashṭri, and the boon[2] given to women by the latter.

Ch. VI.—Contains 34 verses and one small prose passage, and describes purificatory rites. In v. 33 *Śishṭa* (learned) Bráhmaṇas are defined.

Ch. VII.—Enumerates the four orders, and lays down the duties of a Brahmachárin.

Ch. VIII.—Relates to marriage.

Ch. IX.—Relates to the duties of a hermit.

Ch. X.—Relates to the duties of an ascetic.

Ch. XI.—Relates to the duties of the householder. Yama and Manu are referred to. A few directions with regard to oblations to the manes and the duties of a Brahmachárin are given.

Ch. XII.—Relates to the duties of a *Snátaka*. *Vájasaneyaka* (here used to signify the Śatapatha Bráhmaṇa of the White Yajurveda) is referred to.

Ch. XIII.—Relates to the study of the Vedas, lays down the proper and improper days for study.

---

[1] As to who these are, see Max Müller's History of Sanskrit Literature, pp. 193 and 364, second ed.

[2] This boon is referred to by Yájñavalkya in ch. i. v. 81 (see above p. 172).

Ch. XIV.—Relates to things fit and things unfit to be eaten.

Ch. XV.—Relates to adoption, and the excommunication of an outcast and the penance to an outcast for restoration to his community.

Ch. XVI.—Four chapters commencing with the sixteenth relate to the civil law. The duties of a king, the kinds of proof, things that cannot be given, evidence of witnesses, and suretyship are treated in order.

Ch. XVII.—The necessity of having issue, the different kinds of sons, their definitions and their capacity to inherit, partition among brothers, the shares of sons by wives of different castes, the maintenance of the impotent, the insane and the outcast, the details of *Niyoga*, the circumstances under which a maiden may be remarried, the succession of *sapiṇḍas*, the preceptor, the pupil and the king in order, in the absence of sons—these are briefly treated.

Ch. XVIII.—Enumerates certain mixed classes; prohibits the recitation of the Vedas in the presence of Śúdras, likening the Śúdras to a corpse. Verses from Yama are quoted.

Ch. XIX.—The duties of a king are again taken up. A king is enjoined to ascertain the usages of the country, the caste, or the family, and compel his subjects to adhere to them. Manu and Yama are quoted from.

Ch. XX.—Relates to penances. Vasishṭha ordains penances only in the case of offences unwittingly done, and notices an opinion of others who say that penances remove sins whether done knowingly or otherwise. The offences for which penances are laid down are mostly adultery, manslaughter, and drinking spirituous liquors.

Ch. XXI.—Punishments are laid down for adultery where the male is one of a lower class. Parading the culprit on the back of an ass occurs here as a punishment.

*N.B.*—As already stated, this text is incomplete, and omits nine chapters, seven of which are a continuation of *Práyaschitta* or penances, and the last two treat of different kinds of gifts and the different degrees of merit resulting therefrom.

*Remarks.*—There can be no doubt as to the genuineness of this work, for it is the one which contains all the extracts taken from Vasishṭha by the Vyavahára Mayúkha. It appears to me that this is a very old Smṛiti, and was composed like that of Gautama before the present compilation of Manu's institutes by Bhṛigu. My grounds for this position are the same as those given in my remarks on Gautama

Samhitá. Vasishṭha is referred to by Bhṛigu (see Manu ch. viii. v. 140), who approves of Vasishṭha's law on the subject of the proper rate of interest, contained in the last verse of chapter iii. Manu is indeed frequently quoted by Vasishṭha; but this circumstance is not inconsistent with my conclusion; for, as elsewhere stated, it is my opinion that considerable time must have elapsed between Manu and his compiler Bhṛigu. Manu, Hárita, Prajápati, Yama and Gautama are referred to as earlier writers. The eleventh chapter of this work furnishes a clear refutation of the theory of those that think that the society in India is perfectly stationary, and that the law laid down by ancient Ṛishis is observed at the present day without the slightest change. For transgressing the limit of age laid down for *Upanayana*, Vasishṭha has laid down a penance named *Uddálaka*, which has no place in the more modern treatises of Hemádri and the Vratarája of Viśvanáthabhaṭṭa, the Vratárka of Śaṅkarabhaṭṭa, son of Nílakaṇṭha, and the Vrata Kaumudí of Śaṅkarabhaṭṭa, son of Ballála. It is these last works that now entirely govern the observances of the Aryáns of the present times in respect of *vratas*.

*General Remarks.*

There appear to have been several Vasishṭhas; and it is hard to say which Vasishṭha it was who composed the present work. The first Vasishṭha was one of the ten Mánasaputras of Brahmá (see Bhágavata Puráṇa skandha iii. ch. xii. and Matsya Puráṇa ch. iii. vv. 6 and 7) and of the *saptarshis*, or the constellation of the seven sages of the present Manvantara (see Bhágavata Puráṇa skandha viii. ch. xiii.). In this last capacity he is worshipped with the recitation of the Ṛig-veda VII., 33, 11. He is the reputed seer of the seventh Maṇḍala of the Ṛig-veda. The second Vasishṭha was the priest of King Ikshváku of the solar dynasty. This Ikshváku was the eldest of the ten sons of the present Váívasvata Manu (see Bhágavata Puráṇa skandha ix. ch. vi. v. 4). He was also the preceptor of Ikshváku's son named Nimi; but Nimi at one time having superseded Vasishṭha in favour of Gautama, Vasishṭha and Nimi cursed each other, and both met their end (see Rámáyaṇa Uttarakáṇḍa sarga 55 to 57). The son of this Nimi, named Mithi, founded the Janaka dynasty, and reigned at Mithilá under the preceptorship of Gautama. The third Vasishṭha was the son of Mitrá Varuṇa, and became preceptor to Vikukshi alias Śaśáda, son of Ikshváku. This Vasishṭha had a son named Śakti and a grandson of the name of Paráśara (see Matsya Puráṇa ch. 200). The antagonism between this Vasishṭha and Viśvámitra may be learned from a reference to Rámáyaṇa Bálakáṇḍa sarga 55 to 57. There was another Vasishṭha who also had Viśvámitra for his cotemporary, and who was preceptor to Daśaratha and Ráma of the solar dynasty. Two distant descendants

of Ikshváku named Kalmáshapáda and Harischandra also had Vasishṭhas for their preceptors.

He is the founder of a *gotra* and is also a *pravara*. There is a Tantra ascribed to Vasishṭha, and the word Vasishṭha occurs in the Gaṇapátha of Páṇini in a Gaṇa named Karṇádi. There is a Puráṇa, viz., Vásishṭha Liṅga Puráṇa and an astronomical work named Vasishṭha Siddhánta.

# APPENDIX.

## II.

### PUBLIC CHARITIES.

Sir T. Strange in his chapter on Property thus speaks of religious endowments:—

"Of the property of *Religious Institutions*, and of that partaking of *Jura Regalia*, something will be incidentally said in parts of this work, in which a reference to them connects with other subjects of discussion; materials, concerning them, that are accessible, being too scanty to admit of any extended investigation."[1]

And again he observes at page 151 of the same volume:—

"It may be added here, that the lands endowed for religious purposes are not inheritable at all as private property, though the management of them, for their appropriate object, passes by inheritance, subject to usage; as in the case of many of the religious establishments in Bengal, where the superintendence is, by custom, on the death of the incumbent, elective by the neighbouring *Mohunts* or principals of other similar ones."

Mr. W. H. Macnaughten (chap. I.) divides property into four kinds—real, personal, ancestral and acquired; but amongst these public charities as a distinct class do not appear.[2] Colebrooke's Digest[3] cites two verses of Yájñavalkya in regard to Bráhmaṇas whom the king is to provide, and who are to behave in a certain way in regard to royal gifts. A text of Bṛihaspati referring to the same subject follows.

The Viváda Chintámaṇi speaks of the resumption of a gift for religious purposes, when the donee has not applied it to the proper object.[4] He also treats of the punishment of persons who defile public thoroughfares, or throw impure things by the side of gardens and watercourses:[5] whether the last two are dedicated to the public does not ap-

[1] Strange's Hindu Law, vol. I., p. 32.

[2] Vol. I. p 1; see also vol. II. p. 305, where a sale of Devatara lands (called sometimes Devutter, Dewutter, &c.) is declared void on the authority of the Bhágavata Puráṇa); but that seems to be the only case on this subject in that volume.

[3] Vol II. 52, 53 (3rd ed. Madras). See above ch. ii. Part II. vv. 185, 186, p. 230. The text from Bṛihaspati is partly translated at p. 130, Part II. lines 2—8.

[4] Babu Prasanna Kumár Tagore's Translation, p. 223, Manu VIII. 212. See Kullúka's Comments.

[5] Id., pp. 125, 126.

pear, but most probably they are intended to represent private property. In the section in regard to the non-performance of agreements the following passage occurs[1]:—"Bṛihaspati says that the villagers, workmen, Bráhmaṇas, &c. shall frame certain rules for redressing public grievances and performing good deeds"; but there is nothing specific herein. Mr. Mayne in his valuable work on Hindu Law and Usage summarizes the present law on the subject.[2] I give below an extract therefrom.

I append in a note other authorities so far as they are available.[3] The writers abovementioned have not treated the subjects of *pratishṭhá* (institution) and *utsarga* (renunciation) in connection with public charities, such as temples, wells, tanks, reservoirs, groves of trees, dharmaśálás, *prapás* (places for supplying water), and the like. In order to supply the want, I propose to write a few lines.

The Bráhmaṇas, like the priestly class of all ages and countries, have a great deal to answer for. But it is hardly correct to say that

[1] Babu Prasanna Kumár Tagore's Translation, p. 108.

[2] See Mayne on Hindu Law and Usage, chap. 12, pp. 351 to 356. The remarks which are referred to above run as follows :—"The devolution of the trust upon the death or default of each trustee depends upon the terms upon which it was created, or the usage of each particular institution, where no express trust-deed exists. Where nothing is said in the grant as to the succession, the right of management passes by inheritance to the natural heirs of the donee, according to the rule that a grant without words of limitation conveys an estate of inheritance. The property passes with the office, and neither it nor the management is divisible among the members of the family. Where no other arrangement or usage exists, the management may be held in turns by the several heirs. Sometimes the constitution of the body vests the management in several, as representing different interests, or as a check upon each other, and any act which alters such a constitution would be invalid. Where the head of a religious institution is bound to celibacy, it is frequently the usage that he nominates his successor by appointment during his own lifetime, or by will. Sometimes this nomination requires confirmation by the members of the religious body. Sometimes the right of election is vested in them. In no case can the trustee sell the right of management, though coupled with the obligation to manage in conformity with the trusts annexed thereto." [The Notes are omitted.]

[3] Prof. Taránátha's Kośa इष्टापूर्त p. 1000; कूप p. 2164; जलाशयोत्सर्ग, p. 3075; Manu IV. 226, 227, see Kullúka's Comments, leaf 78, p. 1. (Grady's Ed. p. 92); Matysa Puráṇa, vol. I. Adhyáyas 57 and 58, pp. 439—450 about wells, tanks, and other water-works and about groves of trees, (Bombay Ed. 1870), *Agni Puráṇa*, Adhyáya 64, p. 191, vol. I.; Áśvaláyana *Gṛihya Sutras*—Pariśishṭa Adhyáya IV. khaṇḍas 1-10, pp. 333-44, Calcutta ed.; Bhágavata Puráṇa, *skandha* X. Adhyáya 52, v. 40 leaf 9, p. 1; Likhita Smṛiti, p. 375, Calcutta ed.; Bṛihatsamhitá of Varáhamihira, Adhyáya 55 and 56, pp. 302-310, Calcutta ed.

Cowell's Tagore Law Lectures for 1870, pp. 65—71; Shamacharan Sircar's Vyavasthá Darpaṇa, (2nd. ed.) pp. 323—332; F. E. Elberling's Treatise on Inheritance, Gift, Will, Sale and Mortgage, Madras, 1856, paras. 205, 206, 270, 330 (4); Mr Justice Strange's Manual of Hindu Law, para. 280 (I), and para. 282; Regulation XIX. of 1810 (Bengal); Regulation VII. of 1817 (Madras); Act XX. of 1863; Act XXII. of 1867. For Bombay see A. K. Nairne's Revenue Hand Book, pp. 374—386 (2nd ed.); Bombay Act VII. of 1865.

"gifts for religious and charitable purposes were naturally favored by the Bráhmaṇas."[1] It seems to me that such things have had their origin in human nature. So far as the ancient Áryan writers could, they appear to have discouraged the reception of gifts[2]; and the care with which the selection of donees was once ordered[3] to be made, would be commendable under any circumstances. It appears that it was charity and the merits to be acquired thereby that induced these endowments. The true popular sentiment may be summed up in the following lines:

अष्टादशपुराणानां सारसारं समुद्धृतम् ।
परोपकारः पुण्याय पापाय परपीडनम् ॥ १

Translation:—"The essence of the essence extracted of the 18 Puráṇas is [that] service to others produces *puṇya* (virtue), and injury to others [produces] sin."

In course of time, deterioration set in. Still the original principle lives, though it will avoid noise and fashion. Charities like those above mentioned are termed *Púrta,* and they are generally coupled with *Ishṭi* (sacrifices) in some of the oldest works. Thus in the Rig-veda Samhitá, *Ishṭápúrta* (sacrifices and charities) are described as the means of going to heaven.[4] In the Taittíríya Áraṇyaka,[5] both *Ishṭa* and *Púrta* are also used almost in their present significations even

[1] Mayne, p. 351.

[2] Yájñavalkya, ch. ii., 202, 213, (Part II. pp. 186, 187); Manu IV. 186 Grady's ed. p. 88.

[3] Yájñavalkya, ch. i. 200, 201 (Part II. p. 186); Manu IV. 190, 192, 193, Grady's ed. p. 89).

Again: "परार्थं सुकृतं हन्ति परस्त्री हन्ति जीवनम् ।
परसेवा सुखं हन्ति सर्वं हन्ति प्रतिग्रहः ॥

[4] Maṇḍala X., 14, 8:—

सं गच्छस्व पितृभिः सं यमेनेष्टापूर्तेन परमे व्योमन् ॥
हित्वाय वद्यं पुनरस्तमेहि सं गच्छस्व तन्वा सुवर्चाः ॥

Mádhava's commentary on this runs as follows:—

हे मदीय पितः ततस्त्वं परम उत्कृष्टे व्योमन् व्योमनि स्वर्गाख्ये स्थाने स्वभूतैः पितृभिःसह संगच्छस्व इष्टापूर्तेन श्रौतस्मार्तदानफलेन संगच्छस्व । तत इष्टापूर्तेन सहागम्यावद्यं पापं हित्वा परित्यज्यास्तं म्रियमाणाख्यं गृहमेहि आगच्छ । ततः सुवर्चाः । तृतीयार्थे प्रथमा । सुवर्चसा शोभनदीप्तियुक्तेन तन्वा स्वशरीरेण संगच्छस्व ॥ (see Max Müller's edition vol. V. page 437.)

[5] Prapáthaka X. Anuváka 1, 6, "इष्टापूर्तं बहुधाजातमित्यादि". Sáyaṇa explains it thus:

"'इष्टं' दर्शपूर्णमासादि श्रौतं कर्म । 'पूर्तं' वापीकूपादि स्मार्तं कर्म । इ०"

Further, Amarasimha defines these as follows:—

Kánda II. *varga* 7, v. 27:—

॥ त्रिष्वथ क्रतुकर्मेष्टं पूर्तं खातादिकर्म यत् ॥

Commentary:—

॥ यत्क्रतुकर्म तदिष्टं स्यात् । "क्रतुर्यज्ञः कर्म दानं । एकाग्नि कर्म हवनं त्रेतायां यच्च हूयते । अन्तर्वेद्यां च यद्दानमिष्टं तदभिधीयत इति मनुः" । एकम् । खातं वापीकूपादि । आदिना देवालयादि यत्कर्म तत्पूर्तं स्यात् एकम् । "पुष्करिण्यः सभा वापी देवतायतनानि च । आरामश्च विशेषेण पूर्तं कर्म विनिर्दिशेदिति स्मृतिः" ।

See Bombay edition p. 172.

more definitively than in the Rig-veda. Hemádri in his Dánakhaṇḍa quotes Śaṅkha,[1] the Sámaveda, Vyása and Nárada in support of these gifts. Kamalákara derives the authority for *dharmaśálás* and *Maṭhás*,[2] tanks, groves of trees, and other charitable works from the highest sources. In his Púrtakamalákara, he lays down the ceremony of *utsarga* (renunciation) in favor of the public. In his work on *Dánas* (gifts), entitled Dánakamalákara he directs, like other *Prayoga* writers, that *dána* may be bestowed *in* water; and when there can be no recipient as in the case of *Maṭhas* for *Sannyásins*, the offering water

---

[1] Pp. 19 and 20, Calcutta ed. 1873, the passages are as follows :—

शङ्खः । रोगिणां परिचर्या च पूर्तमित्यभिनिर्दिशेत् ।

व्यासः । पुष्करिण्यस्तथा वाप्यो देवतायतनानि च । अन्नदानमथारामाः पूर्तमित्यभिधीयते ॥

नारदः । ग्रहोपरागे यद्दानं सूर्यसङ्क्रमणेषु च । द्वादश्यादौ तु यद्दानं तदेतत्पूर्तमुच्यते ॥

सामवेदोपनिषदि । "त्रीण्याहुरतिदानानि गावः पृथ्वी सरस्वती । नरकादुद्धरन्त्येव जपवापनदोहनात् ॥

शङ्खः । इष्टिभिः पशुबन्धैश्च चातुर्मास्यैर्यजेत्तु यः । अग्निष्टोमादिभिर्यज्ञैर्यजेत च स इष्टवान् ॥

अग्निहोत्रं तपः सत्यं वेदानां चैव पालनम् । आतिथ्यं वैश्वदेवं च इष्टमित्यभिधीयते ॥

एकाग्निकादौ यत् कर्म त्रेतायां यच्च हूयते । अन्तर्वेद्यां च यद्दानमिष्टं तदभिधीयते ॥

Translation :—

Śaṅkha—The service of the sick is declared to be *púrta*.

Vyása—*Pushkariṇi* (a small well near a temple with flight of steps), *Vápi* (well with flight of steps) *devatáyatanáni* (temples), *annadánam* (bestowing of food), *árámáh* (groves)—these are called *Púrta*.

Nárada—The gift [made] during an eclipse, or during the entry of sun into the different solstices, or on the twelfth lunar day and the like is called Púrta.

In the Upanishad of the Sámaveda—Three gifts are termed *ati-dánas* (supreme gifts)—cows, lands, and knowledge; they lift from hell, by milking, sowing and meditating [respectively].

[Again] Śaṅkha—He who sacrifices by *Ishṭi*, *Paśubandha*, *Cháturmásya* and *Agnishṭoma* and the like [rites] is the performer of *Ishṭi*.

*Agnihotra* (fire-worship according to a certain form), *tapas* (austerities), truth, the following of the Vedas, *átithya* (entertaining guests) and the *Vaiśvadeva* (sacrifices)—these are termed *Ishṭa*.

What is sacrificed to one fire, or to three [fires], and what is given in the *Antarvedi* (sacrificial altar), is termed *Ishṭa*.

[2] Dánakamalákara : (MS.)

मार्कण्डेयपुराणे । कुर्यात्प्रतिश्रयगृहं पथिकानां हितावहम् ॥ अक्षय्यं पुण्यमुद्दिष्टं तस्य स्वर्गापवर्गदम् ॥

मठदानं स्कान्दे । कृत्वा मठं प्रयत्नेन शयनासनसंयुतम् ॥ पुण्यकाले द्विजेभ्यो वा यतिभ्यो वा निवेदयेत् ॥ सर्वान्कामानवाप्नोति निष्कामो मोक्षमाप्नुयात् ॥

[This is also given in the Dánachandriká, leaf 19, p. 1.]

Translation :—

Márkaṇḍeya Puráṇa—One should build Dharmaśálá (a shelter-house) for the benefit of travellers. It is said such an act entitles him to merits inexhaustible, and is fruitful of celestial abode and final emancipation of the soul.

Skanda Puráṇa on the gift of a *Maṭha*—Having built with efforts a *Maṭha* furnished with rooms for sleeping and sitting, let him give it on a holy day to Bráhmaṇas or ascetics. He shall have all his desires fulfilled. If he has no desire, he shall obtain final emancipation of the soul.

is thrown into a pot of water. Yájñvalkya[1] in his verses on gifts (chap. II., 198—216) speaks of such charitable objects as those of which I am speaking particularly at present (see vv. 209—211). Dánachandriká, (leaf 19, p. 1) directs[2] the dedication of a *dharmaśálá* along with fuel and water. This is intended for *Sádhus* (good men). Many of these gifts are, it will be seen, intended for the public, and owe their origin to ancient precepts given in times quite unlike the present. Time has made changes. But this must of course be expected. And it can by no means be said that that remark applies to India alone. I seek not to justify that which may be unjustifiable. But European writers, excepting those like Professor Max Müller and others, to whom the original sources of information are accessible, ought to be careful in sitting in judgment upon things Indian.

In this appendix I desire to give a few notes on the mode in which the *utsarga* (renunciation) is made; the institutions in regard to which it is made; and those in the case of which it is sometimes made, but is usually not made. I would also make some remarks on *pratishṭha* (institution) of temples, images, &c., giving at the end some original extracts from the Pratishṭhá Mayúkha for the use of those who may be disposed to pursue the subject further. The modes of *utsarga* and *pratishṭhá* will generally furnish a guide to the public in disputed cases in deciding whether the dedicator's ownership in the institution remains, and to what extent.

The beginning of each of these ceremonies is always with a *saṅkalpa* (or determination). This recites the age, year, season, day, &c. and states what the founder proposes to do, and why he does it. The total recited is termed *saṅkalpa*. Thus in the case of the Dharmaśálá, the *saṅkalpa* (determination) to be pronounced in making the gift is given in general terms (Dánachandriká, leaves 1 and 2). This does not mention that the giver makes an *utsarga* (renunciation) of his ownership in favor of the public. The Utsarga Mayúkha says nothing

[1] See Part II., pp. 186, 189.

[2] Dánachandriká :—"धर्मशालादानं मार्कण्डेयपुराणे ॥ कुर्यात्प्रतिश्रयगृहं पथिकानां हितावहम् ॥ निजगेहैकदेशं वा साधूनां यो निवेदयेत् ॥ प्रतिश्रयो धर्मशाला । तथा ॥ अक्षय्यं पुण्यमुद्दिष्टं तस्य स्वर्गोपवर्गदम् ॥ सर्वकामसमृद्धोऽसौ देववद्दिवि मोदते ॥ भविष्ये ॥ प्रतिश्रये सुविस्तीर्णे कारिते सजलेन्धने ॥ दीनानाथजलार्थाय वद किं न कृतं भवेत् ॥"

Translation :—On the gift of a *Dharmasálá*, Márkandeya Puráṇa [says] :—'He who builds a shelter-house for the benefit of travellers, or who gives a part of his own house to men leading a religious life, [*Pratiśraya* means dharmaśálá] is entitled, it is said, to merits inexhaustible and fruitful of celestial abode and final emancipation of the soul. He shall have all his objects accomplished, and shall rejoice in heaven like an immortal. Bhavishya [Puráṇa says]: 'When a man has caused to be erected a shelter-house, very large and furnished with water and fuel, for the use of the poor and the helpless, and for [supplying] water [to the thirsty]; tell me what has not been done by him.'

in regard to such works, but from the *saṅkalpa* in regard to tanks, wells, groves, and trees, their renunciation would be inferred. The Utsarga Mayúkha's ceremonial about tanks, &c. contains the following *Saṅkalpa* or determination :—" अत्र विशेषो भविष्ये । सामान्यं सर्वभूतेभ्यो मया दत्तमिदं जलम् । रमन्तु सर्वभूतानि स्नानपानावगाहनैः ॥ एवं जलं जले क्षिप्त्वा पूजयेज्जलमातरः ॥ "

Translation :—' Here the Bhavishya [Puráṇa] says specially :—I have given this water to all beings in common. May all beings enjoy [themselves] by bathing, drinking, and swimming.' There is nothing about a dharmaśálá in this Mayúkha directly.

The dedication of a *Maṭha* is in different terms. It is to be given to a *dvija* (twice-born) or a *yati* (ascetic). There is a definite donee, and the object of the gift is also specific,[1] which will govern its disposal. About tanks, wells and cisterns, the Mayúkha is decided. If the *Saṅkalpa* as given by the Mayúkha be adopted, the donor renounces his ownership in the thing dedicated. The passage runs thus :—

" ॥ तत उत्सर्गः । भ्रमणार्थां गां गुरवे दद्यात् । अन्यत्सर्वं मत्स्यपुराणीयजलोत्सर्गविधिवत् । इदं चावश्यकम् । यो न कामयते शान्तिं वापीकूपादिके त्विमाम् । तस्मिन्फलं भवेत्तोयमुप्तं बीजमिवोखरे ॥ वापीकूपतडागेषु संस्थितं प्रथमं जलम् । अपेयं तु भवेत्सर्वं तज्जलं सूतिकासममिति निन्दावगमात् । उत्सृष्टं च जलं त्यक्त्वाग्नेयादिपुरोडाशवत्स्वयं नोपयोज्यमिति केचित् । अत्र सर्वप्राणिनामुत्सर्गे उद्देश्यत्वात्स्वस्यापि तदन्तर्गतैर्योगात एवोद्देश्यत्वात्स्वस्य तदभावे न रागवैषम्यात्स्वयमुपयोज्यमित्यन्ये । एवमाम्रफलादिष्वपि । इति भविष्योत्तरोक्तो वापीकूपतडागोत्सर्गविधिः "

Translation :—" Afterwards, the renunciation [is to be made]. The cow [which walks round the tank] should be given to the *guru* (officiator). The rest [should be] like the *vidhi* (ceremony) of renunciation of water [works] given in the Matsya Puráṇa. This is essential as condemnation [of its absence] is thus declared. 'If one does not make such a *Śanti* [ceremony as aforesaid] in respect to wells with flights of steps, drawing wells, &c. that water becomes useless like seed sown on a rocky soil. The first water [*i. e.* water previous to the *Śanti*] existing in the wells with flights of steps, drawing wells, and tanks is not fit for drinking: all that water is impure like a woman after parturition. Some say that the water which has been thus renounced, should be given up by the renunciator and not used by him, like the *A'gneya Puroḍáśa* (a certain portion of the boiled sacrificial rice). Others say that since the renunciation has been in view of all beings including himself, and therefore he is one of the objects indicated, the non-inclusion of one's self would lead to his love for the work being lost, he should use the water. The same in the case of fruits produced in a grove [renounced]. Thus ends the ceremony of *utsarga* (or renunciation of ownership) in a well with flights of steps, a drawing well, and a tank as stated in the Bhavishyottara."

[1] Dánachandriká, leaf 19, p. 1.

The repair and control of the things thus dedicated, and the ownership of which has been renounced, generally rest with the renouncer according to the usage of the country. Mitramiśra in the Víramitrodaya Vyavahárádhyáya in discussing ownership remarks as follows[1]:—

Translation:—"But ownership, so far as protection is concerned, does exist in the donor even when his ownership, consisting of the power of disposition at pleasure, has been withdrawn [by renunciation], until the final accomplishment of the purpose of the donor, who seeks a certain merit according to precepts [on gifts]; for the act imported by the word gift will not be complete until the ownership of another has arisen. The ownership will in this instance [exist] in the same way as [it does in] the case of substances sacrificed, lest sin arising out of the prohibitions about their being touched by prohibited [animal or person] should stick [to the sacrificer]. In this way [*i.e.* on the above hypothesis], the possibility of a stranger appropriating [a thing given, in the former case] and of the forbidding [an unclean touch] being precluded [in the latter case] will not arise, although the ownership of another [viz., the donee] has not arisen [in the thing given]. The practice of the learned, too, in both cases in respect of protection is based on that [limited kind ownership which has been referred to before]."

The above supports the usage of the country as to the dedicator's rights in regard to a sort of guardianship over the thing dedicated.

The Dharmasindhu lays down that until the ceremony of *Goruttáraṇa* (the walking of the cow round) the tank or well, including her going to drink water therein, is made and is followed by the *utsarga* (renunciation), the water should not be used.[2] Kamalákara on the authority of the Bhavishya Puráṇa speaks in the Nirṇayasindhu to the same effect. The *utsarga* ceremonial which he prescribes is that of the Grihya Parisishṭa of the Ṛig-veda. I give the original in a foot-note for reference whenever required.[3]

---

[1] See I. 167 p. 2:—

"किन्तु दातुरेव यथेष्टविनियोगार्हस्वत्वापगमेऽपि परस्वत्वापादिफलाभावे दानशब्दार्थानिष्पत्तेर्विधिशिरस्कफलार्थिनः प्रतिपादनावधि परिपालनीयरूपं स्वत्वमस्त्येव। यथा हुते हविषि भस्मसाङ्गावावधि अस्पृश्यस्पर्शादिनिषेधाश्रयणनिमित्तदोषश्रयणानुरोधेन तथा चान्यस्वत्वानुत्पत्तावपि न मध्यगपरिग्रहादिनिवारणादिदोषः। शिष्टाचारोऽप्युभयत्र परिपालनरूपस्तन्मूलक एव"।

[2] See Parichchheda iii. 1st half leaf 97:—

"उत्सर्गाभावे जलं न ग्राह्यम्। वापीकूपतडागादौ यज्जलं स्यादसंस्कृतम्। न स्पृष्टव्यं न पेयं च पीत्वा चान्द्रायणं चरेत्"॥ Quoted from the Bhavishya Puráṇa in the Nirṇayasindhu.

[3] Nirṇayasindhu, Parichchheda iii. 1st half leaf 45 p. 1:—

उत्सर्गविधिश्चोक्तो बह्वृचपरिशिष्टे। अथातो वापीकूपतडागयज्ञं व्याख्यास्यामः। पुण्याहवुदकसमीपेऽग्निं समाधाय वारुणं चरुं श्रपयित्वाज्यभागान्ते आज्याहुतीर्जुहुयात्। समुद्रज्येष्ठेति प्रत्यृचं ततो हविषाष्टौ तत्वायामीति पञ्च त्वंनो अग्ने इति द्वे इमं मे वरुणेति च स्विष्टकृतं नवमम्। मार्जनान्ते धेनुं तारयेत्। अवतीर्यमाणामनुमन्त्रयेत इदं सलिलं पवित्रं कुरुष्व शुद्धाः पूता अमृताः सन्तु नित्यम्। मां तारयन्ती कुरु तीर्थाभिषेकं लोकालोकं तरते तीर्यते चेति पुच्छाग्रेन्वारब्ध उत्तीर्यापोऽस्मान्मातरः शुंधयन्त्वित्यथा-

In the case of gardens, and groves, and trees the principles governing the ceremonial are the same as in the case of wells, tanks, and other watering places. The following is from the Utsarga Mayúkha :—

॥ अथारामं प्रतिवक्तुं वृक्षारोपणमुक्तं भविष्यत्पुराणे ॥ अश्वत्थमेकं पिचुमन्दमेकं न्यग्रोधमेकं दशतित्तिणीश्च । कपित्थबिल्वामलकत्रयं च पञ्चाम्रवापी नरकं न पश्येत् ॥ पाद्मे ॥ यत्नेनापि च राजेन्द्र पिप्पलारोपणं कुरु । स तु पुत्रसहस्राणामेक एव करिष्यति ॥ कर्त्तव्यमिति शेषः ॥ भारते ॥ कीर्तिश्च मानुषे लोके प्रेत्य चैव शुभं फलम् । अतीतानागतौ चोभौ पितृवंशौ च भारत ॥ तारयेद्वृक्षरोपी च तस्माद्वृक्षांश्च रोपयेदित्यादि ॥ मात्स्ये । पादपानां विधिं वक्ष्ये तथैवोद्यानभूमिषु । तडागविधिवत्सर्वमासाद्य जगतीश्वर ॥

Translation :—" In the Bhavishya Puráṇa, the author speaks with regard to the planting of trees in the course of his dissertation on gardens. He who plants one Pippala tree, one *Pichumanda* tree, one banian tree, and ten *Tittini* trees; three *Kapittha* trees, three *Bilva* trees, three *Amalaki* trees, and builds a well with five mango trees on its banks, shall not see hell."

Pádma Puráṇa says :—" Oh king even with efforts, plant Pippala trees. One *Pippala* tree will do the work of one thousand sons. *Kartavya* (work) is to be taken as understood."

The Mahábhárata says :—" Oh Bhárata, he who plants a tree obtains fame in the world of the mortals and good fruit [of pious deeds] after death ; and delivers from sins the past and the coming generations in the line of his father. And therefore a man should plant trees."

Mátsya Puráṇa [says] :—" Oh king of the earth I shall now speak likewise of the ceremony of trees standing on grounds devoted to gardens. Everything is to be done as in the ceremony of tanks."

Nílakaṇṭha says that there must be an *utsarga* (renunciation) in the case of trees and gardens, as in the case of tanks, wells, &c. But he notes that some are opposed to such a course for which they say there is no authority.

Kamalákara in the Nirṇayasindhu prescribes certain seasons for planting trees on the authority of Chandeśvara.[1]

In the Matsya Puráṇa,[2] the ceremonial for the *utsarga* (renunciation) of trees, gardens, and *dharmáśalás* is given. The trees, &c. are to be ornamented; sacrifices and ceremonies are to be made for four days. A cow is to be worshipped, and is to be made to walk through the trees; after which the *utsarga* is to be made, and the ceremonial concluded in the usual manner. At the present day, the time prescribed by the *Mátsya* is often curtailed; but the ceremonial is otherwise conducted as therein laid down.

---

पराजितायां दिश्युत्थापयेत् । सूयवसाङ्गगवतीति हिङ्कृतं चेद्धिङ्कृण्वतीत्यैलंकृतां विभाय दद्यादितरां वा शक्त्या दक्षिणांत उत्सृजेत् । देवपितृमनुष्याः प्रीयन्तामिति ब्राह्मणान्भोजयित्वा स्वस्त्ययनं वाचयीत विस्तरस्तु मात्स्योक्तो ऽस्मत्कृतजलाशयोत्सर्गविधौ ज्ञेयः । कूपादेरुत्सर्गाकरणे दोष उक्तो भविष्ये । सदा जलं पवित्रं स्यादपवित्रमसंस्कृतम् । कुशाग्रेणापि राजेन्द्र न स्पृष्टव्यमसंस्कृतम् ।

[1] Parichchheda iii. 1st half l. 45 p. 2.

[2] Adhyáya 58, Bombay Edition, vol. I. pp. 447—450.

The above is the *utsarga* of those institutions which are intended for the public, and for which there is no *dána* (gift) in favor of an individual. The founder renounces his right in such a mode as may be usual, and the ceremonial is complete.

In contrast with these, is the case of temples—at least of new temples and the consecration of new images where there is a *Pratishṭhá* (founding). In the case of renewal of old temples, some authors prescribe *utsarga*, whilst others do not do so.

Púrta-Kamalákara prescribes a detailed ceremonial for the *Pratishṭhá* (founding), that is the establishment and consecration of an image in a temple, and which ceremonial is derived from the Puráṇas. The *Mantras* are also drawn from the Vedas. In the beginning, Kamalákara quotes the Nárada-Pancharátra, Agni Puráṇa, Bhavishya Puráṇa extracted in the Kalpataru for fixing dates of celebration of the ceremonial which he describes on the authority of the Matsya Puráṇa. The sacrificial places are directed to be made according to the Agni, Bhavishya, Márkaṇḍeya and Matsya Puráṇas, from which the necessary verses are given. The image is to be kept dipped under water for one, three, five or seven days and nights; or sometimes, (but this seldom happens,) it is dipped and immediately taken out. The temple is here supposed to be ready. And in this the image is placed in the *Garbhágára*[1] (the sanctuary wherein the image is worshipped).

The *saṅkalpa* (determination) for establishing an image according to the Pratishṭhá Mayúkha is of two kinds:—one is for a particular object, and the other is simply for the love of God. In both cases there is no *utsarga* (renunciation of ownership). In the whole of the *Pratishṭhá Mayúkha* there is no *utsarga* of a temple except in the case of repair of old temples, &c. This last presupposes that the repairer is not the owner, and therefore he has to renounce his ownership in the new repaired structure. Both in the Nirṇayasindhu[2] and Dharmasindhu[3] there is not only no *utsarga* in the case of new temples; but it seems to be forbidden. Some temples are distinctly private places. Others are places to which certain portions of the public are admitted for worship. Where the consecration has been with Vedic *mantras*, and the worship is done with *mantras*, the twice-born classes alone are admitted. Local usage has however sometimes interfered even in this case, and except where the institution is private, or has any written history detailing its ritual and worship, usage must be always inquired into.

---

[1] As to its proportions, &c. see Varáhamihira's Bṛihatsamhitá, Adháya 56, pp. 306—310, Cal. ed.

[2] Parichchheda iii. 1st half l. 54 p. 2.

[3] Parichchheda iii. 1st half l. 106 p. 1.

One department of this subject is the *jîrṇoddhára* (repair and renewal) of temples, wells, tanks, &c. This ought to be done as far as possible by those who have founded the charities, or by their descendants. But where they are absent, or, being present, are unable to undertake the work, any of their castemen have the right to do it. In such a case, the permission of the founder's heirs ought to be taken. Where it is impossible, it must be of course dispensed with. Such a contingency arising, the better plan is to consult the heads of the village community. For it avoids all future disputes. The repairing and renewal of old charitable works is looked upon with peculiar favor by the community, and it is therefore important that works[1] of this kind should be performed in such a mode as to avoid all future disputes. Under the new code of Civil Procedure, the Advocate General or some other officer of Government has to give his written consent before certain suits relating to public charities can be conducted.[2] In order to help the parties, and the public in general, I have above noted a few points in connection with these works, and tried to indicate other sources of information. Besides the works abovementioned both in the body and notes, the following are a few of the numerous standard publications on the subject :—

Púrta-prakáśa, being a part of Pratápa-narasimha by Rudradeva, son of Náráyaṇa Toro of Pratishṭhána (Paiṭhan).

Púrtakamalákara by Kamalákarabhaṭṭa, son of Rámakṛishṇabhaṭṭa, son of Náráyaṇabhaṭṭa (see Dr. Mitra's Notices of S. MSS., vol. V. p. 138).

---

[1] See Agni-Puráṇa Adhyáyas 67 and 103, vol. I. pp. 197, 349; Nirṇáyasindhu, *Pari.* iii. 1st half l. 55 pp. 1, 2, Dharmasindhu, *Pari.* iii. 1st half l. 107 p. 2.

[2] *On suits relating to Public Charities.*

Act X. of 1877, Sec. 539.—"In case of any alleged breach of any express or constructive trust created for public charitable purposes, or whenever the direction of the Court is deemed necessary for the administration of any such trust, the Advocate General acting *ex officio* or two or more persons having a direct interest in the trust, and having obtained the consent in writing of the Advocate General, may institute a suit in the High Court or the District Court within the local limits of whose civil jurisdiction the whole or any part of the subject-matter of the trust is situate, to obtain a decree—

(*a*) Appointing new trustees of the charity.

(*b*) Vesting any property in the trustees of the charity.

(*c*) Declaring the proportions in which its objects are entitled.

(*d*) Authorizing the whole or any part of its property to be let, sold, mortgaged or exchanged.

(*e*) Settling a scheme for its management; or granting such further or other relief as the nature of the case may require.

"The powers conferred by this Section on the Advocate General may (where there is no Advocate General), be exercised by the Government Advocate, or (where there is no Government Advocate) by such officer as the Local Government may appoint in this behalf."

Pratishṭhá Hemádri by Śrí Hemádri, being an account of the Ishṭá-púrta works entitled Pariśesha Khaṇḍa (*i.e.* miscellaneous sections of Chaturvarga Chintámaṇi).

Pratishṭhá Dinakaroddyota by Gágábhaṭṭa *alias* Viśveśvarabhaṭṭa, son of Dinakarabhaṭṭa (being the 9th Uddyota).

Pratishṭhá Paddhatí by Dinakara, son of Bháradvája Mahádeva.

Pratishṭhá-Tilaka. It is in 15 Paṭalás, in the form of a dialogue between Iśvara and Devi.

Pratishṭhá-śára-dípiká by Páṇḍuranga, son of Rámachandra Díkshita, son of Chintámáṇi Díkshita, of the family of Ṭakale.

Pratishṭhá Prayoga, being a part of Prayogaratnamálá by Vásudeva-bhaṭṭa, son of Ápadevabhaṭṭa.

Devasthápana Kaumudí by Śankarabhaṭṭa Ghára, son of Ballála Súri.

Múrti-Pratishṭhá by Trivikrama Súri, son of Raghu Súri (see Dr. R. Mitra's Notices of S. MSS. vol. V. p. 151).

Múrti-Pratishṭhá-Paddhati by Trivikrama.

Prásáda Pratishṭhá Paddhati by Naraharibhaṭṭa Pandharapura.

Linga-Pratishṭhá Paddhati founded on Baudhayána and other ancient authorities:—by Bhaṭṭa Chintámaṇ, son of Bhaṭṭa Moreśvara, belonging to the family named Paṭwardhan (see Dr. Rájendralal Mitra's Notices of S. MSS., vol. I. p. 6).

Utsarga Kaustubha compiled by command of Máhárája Dhiráj Báj Bahádur by Anantadeva, son of Ápadeva, being the first half of the second Dídhiti of the Púrta Paddhati contained in the Rája-dharma Kaustubha.

Utsarga Paddhati by Bhaṭṭa Náráyaṇa, son of Rámeśvara Bhaṭṭa Súri (it relates to the *utsarga* of tanks, wells, cisterns, gardens, trees, &c.; and is the oldest work by the Bhaṭṭas of Benares) (see also Dr. R. Mitra's Notices of S. MSS., vol V. p. 146.)

Sárvadaiviki Pratishṭhá by the *Yati* Prajnámṛita, pupil of Kṛishṇámṛita.

Prásáda-Śivádyáchara-Pratishṭhá by Śaṅkarabhaṭṭa, son of Náráyaṇa-bhaṭṭa, extracted in his Dharma-dvaitanirṇaya.

Nútana-Múrti Pratishṭhá Prayoga by Bhaṭṭa Náráyaṇa according to the Gṛihya Pariśishṭa of Áśvaláyana.

All the above works are now used for the founding, consecration, and the ceremonies attendant thereon on this side of India. I have omitted various minor works collected by me. Dr. Rájendralal Mitra (to whom we are largely indebted for various discriminating and learned contributions in Áryán literature), has in his second

volume of notices of Sanskrit MSS., given the following account of a curious ancient work on the subject, for which I must find place here: "Maya Mata, *alias* Maya Silpa, *alias* Pratishṭhá Tantra,—a treatise on architecture founded on the canons of Maya, a Dánava, who is reputed to have built a palace for Yudhishṭhira. The work is written in the Tántric style in *anushṭubh* verses; but it is so full of lacunæ and obscure terms and phrases that it is in many places unintelligible. The author's name is not given, and the last line and the colophon suggest the idea of the work being incomplete. But such as it is, it is the most complete treatise on architecture that has yet come to hand, and I feel grateful to Mr. A. C. Burnell for having procured it for me from the Library of the Rájá of Tanjore. It is remarkable in being less devoted to religious ceremonies and astrological disquisitions than the Mánasára. Contents: 1, Architecture defined; 2—3, Examination and purification of the ground intended to be built upon; 4, Measurement of land; 5, Ascertainment of the points of the compass; 6, Fixing of pegs to demarcate the spots for building; 7, Offerings to gods; 8, Measure of villages and the rules for laying them out; 9, Ditto of towns; 10, Directions for laying out squares, octagons, &c.; 11, Laying the foundation and the ceremonies to be observed on the occasion; 12, Plinth; 13, Base; 14, Pillars; 15, Stone-work; 16, Joining or cementation; 17, Spires or tops of houses; 18, One-storied houses; 19—20; Two-storied houses; 21, Three, four, &c. storied houses; 22, Gopuras or Gates; 23, Mandapas; 24, Out-offices, barns, treasuries, &c.; 25, Mandapasabhás, or open courts; 26, Linear measure of finger breadths, &c." (vol. II., p. 306).

*N.B.*—I append the following extracts from the Pratishṭhá Mayúkha bearing on different portions of the founding and consecration of temples, images, &c.

The following is the conclusion of the *Prásádá-dhivásana* ceremony:—

सर्वदेवमयाचिन्त्यसर्वरत्नोल्बवला कृते ॥ यावच्चन्द्रश्च सूर्यश्च तावदत्र स्थिरो भवेत्यधिवास्य पिण्डिकावाहनपरिवारदेवतानां तत्तन्मन्त्रैः प्रत्येकमष्टाविंशतिसङ्ख्याकं होमं तिलैः कृत्वा मूलमन्त्रेण चवैष्णोत्तरशतं हुत्वा चतस्रो गा दुग्ध्वा क्षीरेण विष्णुगायत्र्या चरुं श्रपयित्वा देवाय निवेद्य द्वादश ब्राह्मणान् भोजयित्वा विष्णुर्मे प्रीयतामिति वदेत् ॥

Where there is on old *Svayambhú* (self-made) image founded, and only a new temple is made, there the *maṇḍapa* being previously made, the rest should be done as under:—

यत्र तु स्वयम्भूर्देवः प्रागेव प्रतिष्ठितः प्रासादश्च नूतनस्तत्रापि तदुत्तरे मण्डपं कृत्वा पूर्वेद्युः पुण्याहवाचनं नान्दीश्राद्धं देवप्रतिष्ठोक्तमण्डपस्थानार्विग्वरणादिकं कुर्यात् । तत्र गुरुर्वेद्यां तद्देवतामण्डपं कृत्वा वास्तुदेवतापूजनाग्निप्रतिष्ठाग्रहपूजाऽभ्यर्भागोत्तरग्रहहोमशेषादिवास्तुपीठदेवतावास्तुहोमैकाशीतिकलशस्थापनानि कृत्वा तैः प्रासादं क्षालयित्वा यजमानमभिषिच्य प्रासादमुत्सृजेदित्येतावानेव विधिः ॥

Prayer to Deví at the conclusion of the consecration of her image :—

सर्वदेवमयीशानि त्रैलोक्याह्लादकारिणि ॥ त्वां प्रतिष्ठापयाम्यत्र मन्दिरे विश्वनिर्मिते ॥ यावच्चन्द्रश्च सूर्यश्च यावदेषा वसुन्धरा ॥ तावत्त्वं देवि देवीशे मन्दिरेऽस्मिन् स्थिरा भव ॥

[Prayers in the case of other images are given further on.]

Beginning of the *jírṇoddhára* (renewal of the old, &c.) ceremony :—

अथ जीर्णोद्धारविधिः ॥ अग्निपुराणे ॥ जीर्णादीनां च लिङ्गानामुद्धारं विधिना वदे । लक्ष्म्योज्झितं च भग्नं च स्थूलं वज्रहतं तथा ॥ सम्पुटं स्फुटितं व्यङ्गं लिङ्गमित्येवमादिकम् । इत्यादिदुष्टलिङ्गानां त्याज्या पिण्डी तथा वृषः । लक्ष्म्येङ्गितं वारणादि । भ्रमेण तद्विधिना स्थापितं सत्तालक्षणरहितं भग्नमनेकशकलीभूतम् ॥ स्थूलं पिण्डिकाननुरूपम् । वज्रहतं विद्युद्धतम् ॥ सम्पुटं न्युब्जं । स्फुटितमेकदेशे भग्नम् । व्यङ्गं पिण्डिकाप्रणाल्यादिरहितम् । आदिपदेन चण्डालस्पृष्टादीनां ग्रहणम् । पिण्डिकावृषयोर्दुष्टत्वे तयोरेव त्यागो न लिङ्गस्य । चलितं चालितं निम्नमत्यर्थविषमस्थितम् ॥ दिङ्मूढपतितं लिङ्गं मध्यस्थं पतितं तथा । एवंविधं च संस्थाप्य निर्व्रणं च भवेद्यदि । नादेयेन प्रवाहेण तदपाक्रियते यदि ॥ ततोन्यत्रापि संस्थाप्य विधिदृष्टेन कर्मणा ॥ निम्नं सामन्तभूभागान्निम्नायां भुव्यवस्थितम् । विषमस्थितं यत्र पूजादिकर्त्तुं न शक्यते तस्मिन्देशे व्यवस्थितम् । दिङ्मूढं विशेषविध्यभावेपि उदगतिरिक्तदिक्प्रणालिकम् । पतितं गर्तादौ । मध्यस्थं सम्पूर्णपिण्डिकाश्वभ्रान्तम् । प्रासादमध्यभागे स्थितमित्यपि केचित् ॥ एवंविधमित्यनेन लक्ष्म्योज्झितभग्नस्फुटितविद्युद्धतातिरिक्तानां ग्रहणम् । तेन जघन्यो निर्व्रणशब्दोपि लक्ष्म्योज्झिताद्यतिरिक्तानामिवोपलक्षकः ॥ पीठाच्च चालितं लिङ्गं निर्दोषं तु भवेद्यदि । ततो वै स्थापयेत्तत्र जपेल्लक्षमघोरकम् ॥ त्यजेत्सदोषितं लिङ्गं श्वपचाद्यैश्च सेवितम् ॥ लिङ्गान्तरं प्रतिष्ठाप्य विशुद्धिमभिगच्छतीति सिद्धान्तशेखरोक्तेः ॥

On the new image to be established and the merit arising from such establishments, &c :—

॥ ततो निवेदयेदन्यां प्रतिमां लक्षणान्विताम् ॥ निवेदयेत्स्थापयेत् ॥ तत्क्षणादेव राजेन्द्र तस्य दोषस्य शान्तये । सम्पत्तिर्वा विपत्तिर्वा नोपेक्षां तत्र कारयेत् ॥ अपास्य पिण्डिकां पूर्वां नव्यां तत्र निवेशयेत् । यद्द्रव्या यत्प्रमाणा च या मूर्त्तिश्चोद्धृता हरेः ॥ तद्द्रव्या तत्प्रमाणा च सा मूर्त्तिस्तत्र कीर्त्तिता । यत्प्रमाणं यदाकारं यन्मयं बिम्बमुद्धरेत् ॥ तत्प्रमाणं तदाकारं तन्मानं तत्र विन्यसेत् । विहाय पिण्डिकां पूर्वां तद्दिने चापरां न्यसेत् ॥ द्वितीये वा तृतीये वा दिवसे स्थापयेद्धरिम् । अत ऊर्ध्वं भवेद्दोषो विधिनापि निवेशिते ॥ अनेनैव विधानेन लेख्यादींस्तु विसर्जयेत् । लेख्यादीन् कुम्भलिखिताः प्रतिष्ठापिताः प्रतिमाः ॥ अन्यद्धि कल्पयेत्तत्र तत्प्रमाणं तदाकृति । एष संक्षेपतः प्रोक्तो जीर्णोद्धारविधिस्तव ॥ सर्वेषामेव देवानामेष साधारणः स्मृतः । यो जीर्णं विधिना बिम्बं संस्कुर्यान्मानवो भुवि ॥ फलं दशगुणं तस्य मूलान्नास्त्यत्र संशयः । वापीकूपतडागानां सुरधाम्नां सदानघ ॥ प्रतिमानां सभानां च संस्कर्ता यो नरो भुवि । पुण्यं शतगुणं तस्य भवेन्मूलान्न संशयः ॥ संशयोत्र न कर्त्तव्यो जीर्णसंस्कारकर्मणि । मूलाद्दशगुणं प्रोक्तं पुण्यं कूपे प्रतिष्ठितम् ॥ प्रतिष्ठितमिति भावोक्तः ॥ प्रतिमायां शतगुणं कूपादेः परिकीर्तितम् । प्रतिमादौ दशगुणं जीर्णसंस्करणाद्भवेत् ॥ कूपप्रतिमयोर्दशगुणशतगुणयोरल्पत्वमहत्त्वापेक्षायां व्यवस्था ॥ अग्निपुराणे ॥ सुस्थितं दुस्थितं वापि शिवलिङ्गं न चालयेत् । शतेन स्थापनं कुर्यात्सहस्रेण तु चालनम् ॥ पूजादिभिश्च संयुक्तं जीर्णाद्यमपि सुस्थितम् । पूजया रहितं यत्तददुष्टमपि दुःस्थितम् ॥ अयंच चालननिषेधो विधिव्यतिरेकेण ॥ शतसहस्रसंख्येऽनुक्तसंख्येयत्वाद्गोगते ॥ गौःश्वाऽश्वश्चेत्यत्र बहूपकारित्वाद्यः सहस्रं शताश्वमित्यादौ बाहुल्येन दर्शनाच्चेति न्यायविदः ॥

*Jírṇoddhára* ceremony from the Siddhánta Śekhara :—

॥ सिद्धान्तशेखरे ॥ जीर्णोद्धारविधिं वक्ष्ये समासात्तव चोदितम् । ईशान्यां दक्षिणे चापि मण्डपं पश्चिमामुखम् ॥ कुर्वीत पूर्वमेकास्यं प्रत्येकं चैकतोरणम् । पूर्ववत्सर्वस्तम्भादिद्वारपालार्च्चनं कुर्यात्स्थण्डिलेग्नौ शिवार्चनं द्वारपालार्चनं मण्डपप्रतिष्ठाप्रकारेण । मन्त्राणां तर्पणं कुर्याद्वास्तुदेवार्च्चनं तथा । मन्त्राणां देवस्थापितकलानां । अनंतरं बलिं दद्याच्छिवभक्तांश्च भोजयेत् । शिवभक्तान् पञ्चेति त्रिविक्रमः । द्विजा-

न्कर्मकरादींश्च ततो विज्ञापयेच्छिवम् । दोषालिङ्गमिदं दुष्टं शान्तिरस्त्वस्य चोत्सृतौ ॥ तस्मादेवं विधानेन अधितिष्ठ महेश्वर । भवत्विति वचस्तेन प्रोक्तं तद्भावयेद्गुरुः । तेन शिवेन प्रोक्तं शान्तिर्भवत्विति वचो गुरुर्भावयेत् । विज्ञाप्यैवं शिवं भक्त्या शान्तिहोमं समाचरेत् ॥

Ceremony at the beginning of taking away the old image:—

॥ अथास्य प्रयोगः ॥ यजमानउद्धार्यादक्षिणस्यामीशान्यां वा पश्चिमद्वारेकतोरणं मण्डपं तन्मध्यभागे वेदिपूर्वभागे वर्तुले चतुरस्रं वा पश्चिमे वास्तुपीठमुत्तरे वालुकया स्थण्डिलं च कृत्वा कालादि स्मृत्वा मौलफलाच्छतगुणफलकामोऽल्पप्रतिमायां तु दशगुणफलकामो वा जीर्णादिदोषदुष्टस्य लिङ्गस्य प्रतिमाया उद्धारमुच्छ्रयणं वा करिष्य इति सङ्कल्पयेत् ॥ पिण्डिकावृषगरुडप्रासादकलशेषु तु ईश्वरप्रीतिकाम इति विशेषः ॥ सर्वत्रेश्वरप्रीतिकामो वा ॥ ततो गणेशपूजास्वस्तिवाचनमातृपूजानान्दीश्राद्धानि नूतनप्रतिष्ठावत्कृत्वा तद्वदेव ब्रह्माचार्यसदस्यान् द्वात्रिंशत्षोडशाष्टौ चत्वारो वा ऋत्विजो द्वारपालांश्चाष्टौ चतुरो वा वृत्वा वस्त्रालंकारमधुपर्कादिभिस्तान्पूजयेत् ॥

Concluding prayers asking for blessings on the founder, on the king, and people of the country, on the officiators and on the builders of the temples.

ततो लिङ्गं प्रतिमां वा तत्रैव विधिवत्संस्थाप्य ध्रुवा द्यौरित्यादिमन्त्रान् पठित्वा स्थिरीकृत्य बहुसम्पूज्य प्रार्थयेत् ॥ ज्ञानतोऽज्ञानतो वापि यथोक्तं न कृतं यदि ॥ तत्सर्वं पूर्णमेवास्तु त्वत्प्रसादान्महेश्वर । कर्तुराज्ञः प्रजानां च शान्तिर्भवतु सर्वदा ॥ अस्माकं शिल्पिनां चैव सुप्रीतो भव सर्वदेति ॥

# APPENDIX.

## III.

### THE SAPIṆDA RELATIONSHIP.

*Sápiṇḍya* (the relationship of a *Sapiṇḍa*) is a very important subject in the Hindu Law, and has reference to three branches of it, viz., marriage, impurity on birth or death, and inheritance.

*Sápiṇḍya* is defined in two different ways by different writers. According to the first definition *Sapiṇḍa connection* means connection with the act of offering a *Piṇḍa*[1] or rice-ball. This is followed by the author of the Smṛiti Chandriká, and by Aparárka, Medhátithi, Mádhava, Nágojíbhaṭṭa, and others. The second definition makes the relationship depend on the connection with one *piṇḍa* or body, that body in the case of collaterals being that of the *kúṭasha* or the common ancestor[2] as counted from the persons whose relationship is in question. And this is followed by Váchaspati Miśra, Súlapáṇi, Vijñáneśvara, and the authors of the Madanaratna, Párijáta, Nirṇayasindhu, Dharmasindhu, and Samskárakaustubha and others. Both these definitions are too wide, and they have both been circumscribed, the former by a text from the Matsya Puráṇa,[3] and the latter by one from Yájñavalkya (ch. i.[4] v. 53, second hemistich). When thus curtailed they appear ultimately to lead to a similar result. Without pursuing therefore this distinction (which for all practical purposes seems immaterial, and is based on the ambiguity of the word *Piṇḍa*), I may say in general terms that *Sapiṇḍa* relationship extends on the father's side to the sixth ascendant. These ascendants may be males or females, and may further be connected with the father through males or females. Thus a man's father's father's father and father's mother's father are male ascendants through a male and a female respectively. Again, a man's father's father's mother and father's mother's mother are female ascendants through a male and a female respectively.[5] This process being

[1] The Sanscrit definition which is translated above runs thus :—एकपिण्डदानाक्रियान्वयित्वम् (see Nirṇayasindhu parichchheda iii. 1st half l. 22 p. 2 line 2).

[2] See Mit. ch. i. l. 52 p. 1, and its translation in West and Bühler's Digest of the Hindu Law, 2nd ed. p. 174; Nirṇayasindhu pari. iii. 1st half l. 22 p. 1, Samskárakaustubha l. 173 p. 1.

[3] It runs thus :—

लेपभाजश्चतुर्थ्याः पित्रायाः पिण्डभागिनः । पिण्डदः सप्तमस्तेषां सापिण्ड्यं सप्तपौरुषम् ॥ See Nirṇayasindhu pari. iii. 1st half l. 22 p. 2.

[4] See Part II. p. 168, ll. 2 and 3.

[5] See Table I. further on p. 349.

extended on the father's side, up to the sixth ascendant, male or female, six descendants, male and female, must be counted through males and females, from the six ascendants, and from himself or herself who is the seventh in the series. In counting these descendants, wives of the male *Sapiṇḍas* are also included. The same is to be done on the mother's side up to three ascendants above the mother, and the four descendants of those three ascendants above the mother. The wives of the male descendants are included as before. This is *sapiṇḍa* connection in general, and is co-extensive with that for marriage purposes. All these *Sapiṇḍas* do not enter into the other two of aforesaid three divisions of *Dharmaśástra* affected by the *Sapiṇḍa* relationship. But whilst this is so, it may be said that the general statement of *Sapiṇḍas* as above given is the widest and includes *Sapiṇḍas* of all kinds and degrees. Further on, they will be treated of as coming from different departments for different purposes. The distinction of *Sapiṇḍas* for different purposes, the contraction of *Sapiṇḍa*-ship, and all other kindred matters, will then be cleared up.

*Sapiṇḍa* relationship is divided by some writers into two kinds, *mukhy* (primary), and *áropita* (arbitrary).[1] Others divide it into *sákshát* (immediate), and *paramparayá* (mediate or through a medium). This is derived from Vedic texts, like *átmá hi jajñé átmanah* [*i. e.* from *átman* (self) *átman* (self) was produced] and *prajám anu prajáyase* (*i. e.* thou art born [again] through [thy] offspring).[2] The connection with one body, which is the essential of the *Sapiṇḍa* relationship, is in some cases thus explained: The wife and husband become each other's *Sapiṇḍas* in and through the body of their son, who draws the elements of his *Piṇḍa* (or body) from the blood of both. The brother's wives are connected with the *Piṇḍa* or body of their common father-in-law, whose blood enters the blood of the sons of those sisters-in-law through their husbands.[?]

I shall now treat of *Sapiṇḍas* in reference to the first division, which I shall call

## SECTION I.

### *Marriage.*

An Arya should not marry a *Sapiṇḍa*. This appears to be the law of old text-writers or *Rishis*. The wishes and practices of the ancient sages appear curious, if not often inconsistent; and custom has again changed the old limits.

The determination that the *Sapiṇḍa* relationship does not exist between the bride and bridegroom is to be made by the following rule:

[1] See Samskárakaustubha l. 173, p. l. [2] Mitákshará ch. i. l. 6 p. l.

Begin with the bride or the bridegroom, and count, exclusive of both, six or four degrees upwards according as their relationship with the common ancestor is through the father or the mother respectively, and if the common ancestor is not reached within those degrees on both sides, then only they are not *Sapiṇḍas*, and marriage between them can be solemnized. This is the sum and substance of the different formulas and tables which are laid down succinctly and clearly in the Dharmasindhu, and which I extract below for the information of my readers.[1] An interesting calculation of the number of brides prohibited on account of the *sapiṇḍa* relationship has heen made by Ráma Vájapeyin and thrown into the form of verses.[2] These verses have been quoted and explained by the Samskárakaustubha in a very lucid man-

---

[1] वंध्वा वरस्य वा तातः कूटस्थाद्यदि सप्तमः । पञ्चमी चेत्तयोर्माता तत्सापिण्ड्यं निवर्तत इत्यादिवचनैर्निरासः मातृत्वपितृत्वादिसंम्बन्धे सत्येव पञ्चमसप्तमपर्यन्तमेवेत्युभयानियमस्वीकारात् । तथाच पितृद्वारकसापिण्ड्यविचारे सप्तमादूर्ध्वं सापिण्ड्यनिवृत्तिः मातृद्वारकसापिण्ड्ये तु पञ्चमादूर्ध्वं तन्निवृत्तिरिति निर्णयः । अत्रोदाहरणानि । विष्णोर्मूलात्कान्तिगौर्यौ जातौ ताभ्यां सुधीहरौ । बुधमैत्रौ चैत्रशिवौ गणभूषौ मृडाच्युतौ ॥ १ ॥ तज्जातयोरष्टमयोर्विवाहो रतिकामयोः । विष्णोर्मूलाद्दत्तचैत्रौ सोममैत्रौ सुधीबुधौ ॥ २ ॥ ताभ्यां श्यामारती तज्जशिवगौर्योः करग्रहः ॥ विष्णोर्मूलाद्दत्तचैत्रौ सोममैत्रौ सुधीबुधौ ॥ ३ ॥ ताभ्यां श्यामा नर्मदा च शिवकामौ रमाकवी । मण्डूकप्लुतिसापिण्ड्यं रमाकव्योर्विवाहहृत् ॥ ४ ॥ विष्णोर्मूलाद्दत्तचैत्रौ सोममैत्रौ सुधीबुधौ । श्यामाशिवौ कान्तिहरौ हरकान्ती न दम्पती ॥ ५ ॥ निवृत्तमप्येकतस्तदन्यतोप्यनुवर्तते । दिङ्मात्रेणोदाहृतात्र सेयं सापिण्ड्यपद्धतिः । कूटस्थात्पञ्चम्योः कन्ययोः सन्ततौ मातृद्वारकत्वात् ।

| विष्णुर्मूलभूतः | विष्णुर्मूलभूतः | विष्णुर्मूलभूतः | विष्णुर्मूलभूतः |
|---|---|---|---|
| कान्तिः २ गौरी २ | दत्तः २ चैत्रः २ | दत्तः २ चैत्रः २ | दत्तः २ चैत्रः २ |
| सुधीः ३ हरः ३ | सोमः ३ मैत्रः ३ | सोमः ३ मैत्रः ३ | सोमः ३ मैत्रः ३ |
| बुधः ४ मैत्रः ४ | सुधीः ४ बुधः ४ | सुधीः ४ बुधः ४ | सुधीः ४ बुधः ४ |
| चैत्रः ५ शिवः ५ | श्यामा ५ रतिः ५ | श्यामा ५ नर्मदा ५ | श्यामा ५ शिवः ५ |
| गणः ६ भूषः ६ | शिवः ६ गौरी ६ | शिवः ६ कामा ६ | कान्तिः ६ हरः ६ |
| मृडः ७ अच्युतः ७ | अत्र गौरीशिवयोः षष्ठयोर्विवाहः मातृद्वारकत्वात् | रमा ७ कविः | अत्र कान्तिहरयोर्न विवाहः एकतोनिवृत्तावपि अन्यतः अनुवृत्तेः |
| रतिः ८ कामः ८ | | अत्र रमाकव्योर्न विवाहः मण्डूकप्लुत्यासापिण्ड्यानुवृत्तेः । | |
| अत्र रतिकामयोरष्टमयोर्विवाहः | | | |

सापिण्ड्यनिवृत्तिः पञ्चम्योः कन्ययोर्यौ पुत्रौ तयोः सन्ततौ पितृद्वारकत्वात्सापिण्ड्यमनुवर्तत इतीदं मण्डूकप्लुतिसापिण्ड्यं पञ्चम्याः कन्यायाः पुत्रस्य षष्ठस्य कूटस्थात्पञ्चमादिः सपिण्डो न भवति तथापि द्वितीयसन्ततिपङ्क्तौ पञ्चमषष्ठादेः पितृद्वारकत्वादिना सापिण्ड्यसत्वादेकतो निवृत्तावप्यन्यतोनिवृत्त्या पञ्चमषष्ठादिना पञ्चम्याः कन्यायाः सन्ततिर्न विवाह्या । एवं कूटस्थमारभ्य द्वितीयतृतीयादेश्चैकतोव्यावृत्तिपरतोनिवृत्त्योः सत्त्वमूह्यम्. (See *pari*. iii. 1st half l. 49 pp. 1 and 2.)

[2] See the Nirṇayasindhu *pari*. iii. 1st half l. 26 p. 2, lines 5—12.

" मातापितृद्वारकसापिण्ड्यवतीनां कन्यानामियं संख्या रामवाजपेयिनोक्ता ॥ उद्वोढुः पितरौ पितुश्च पितरौ तज्जन्मकृद्दम्पतिद्वन्द्वं तस्य चतुष्कमष्ट च ततोप्यस्य क्रमात्षोडश । वंशारम्भकदम्पतीप्रमितिरित्यासप्तकक्षं रदा एकैकान्वयकन्यकाः पितृकुले त्वासप्तकक्षं ब्रुवे ॥ यद्यप्येकस्य बहवः सुताः स्युस्तदपीहतु । संबन्धसाम्यादेकैकगणितेत्यवधार्यताम् । एकस्मान्मिथुनात्सुतोथदुहिताद्वन्द्वद्वयं तद्द्वयात्तस्माद्द्वन्द्वचतुष्कमष्ट च ततोऽतः षोडशाऽतो रदाः । यावत्सप्तमकक्षमग्निऋतवः कन्या इहैकान्वये तादन्तैर्गुणितारसैकसदृशो वंशे सपिण्डाः पितुः । मातुर्जन्मददम्पती च मिथुनद्वन्द्वं तयोः सागरास्तस्याः पञ्चमकक्षमष्टमितिरित्येकान्वयः पुंसुते । द्वन्द्वाद्द्वन्द्वयुगं भतोब्धय इतोऽष्टौपञ्चकक्षं शरक्षोण्यः सप्तगुणाः शराभ्रविधवो मातुः सपिण्डाः कुले । कुलद्वयस्य कन्यकायुता मिथः सपिण्डकाः । हिमांशुदृग्धरादृशो विवाहकर्मवर्जिता इति ॥

ner. I give the extract below.[1] To understand this aright it will be necessary for the reader to take three things as granted. First, that the bridegroom is going to be married for the first time. Secondly, that each married couple has one son and one daughter. And thirdly, that the brides who are excluded by reason of their relationship through the step-mother, or through adoption, of either the bride or bridegroom are not included in this calculation. I subjoin four tables prepared by me according to the above authorities for the further elucidation of the above remarks of Kaustubha :—

[1] See Samskárakaustubha l. 178 p. 2, line 5 to l. 179, p. 1 line 8. [I quote the explanation only.]

"अत्र प्रथमश्लोके वरस्य पितृपक्षे सापिण्ड्येनाविवाह्यकन्यानां सङ्ख्यां दर्शयितुं प्रत्येकं एककन्यायाः पितरावेकं द्वन्द्वमित्येवमङ्गीकृत्य सप्तकस्थं द्वन्द्वानां सङ्ख्यामुक्त्वा पितृपक्षे एकैकद्वन्द्वं कुले तावत्कन्यानां सङ्ख्योक्तिप्रतिज्ञा क्रियते । तथाहि । वरः प्रथमः द्वितीयस्थानस्थितं वरपितरौ द्वन्द्वं १ तृतीयस्थाने पितुः पितरौ द्वन्द्वं १ चतुर्थस्थाने तयोः प्रत्येकं जनके द्वन्द्वे २ पञ्चमस्थाने तद्वन्द्वद्वयघटकपुंद्वयस्त्रीद्वययोर्जनकद्वन्द्वानि ४ षष्ठस्थाने तद्वटकाष्टसङ्ख्यास्त्रीपुंव्यक्तिजनकानि द्वन्द्वानि ८ सप्तमस्थाने तद्वटकषोडशव्यक्तिजनकानि द्वन्द्वानि १६ । अंतोपीति तसिः षष्ठ्यर्थे । तज्जन्मकृदिति समासान्तर्गतजन्मकृत्पदस्य तस्येत्यादिषष्ठ्यन्तेषु न निष्कृष्य प्रत्येकमन्वयः । ततश्च तस्य जन्मकृद्द्वन्द्वानां चतुष्कमित्येवं वाक्यार्थ उन्नेयः । इत्यासप्तकक्षमित्यस्य मध्यमणिन्यायेनान्वयः । दम्पतिशब्देन द्वन्द्वमुच्यते । रदशब्देन द्वात्रिंशत्सङ्ख्योच्यते । ततश्चेति प्रमितिः सिद्धा तथाचापेक्षाबुद्ध्या उक्तसंख्या सिद्धेत्याशयः । ननु नोक्तद्वन्द्वसङ्ख्या नापि वक्ष्यमाणा कन्यासङ्ख्यापि सम्भवति द्वन्द्वद्वयघटयोः स्त्रियोरेकद्वन्द्वजन्यसम्भवात् एकस्माद्वन्द्वादनेककन्यानामपि संभवात् अत उक्तं यद्यपीति । एकस्य द्वन्द्वस्य स्युरित्यन्तेन शङ्कोद्वयानुवादः । इह द्वन्द्वसंख्यायां तुशब्दस्तद्विषये प्रथमशङ्कानिवृत्त्यर्थः साम्यादित्यनन्तरं एकस्मादिति सामर्थ्यलभ्यं ततश्च गणनासौकर्याय जन्यकन्याभेदेन जनकद्वन्द्वे भेदमारोप्य जनकद्वन्द्वैकेन च जन्यास्वभेदमारोप्य सङ्ख्याद्वयोपपत्तिरित्याशयः । उक्तद्वात्रिंशद्वन्द्वानां मध्ये एकद्वन्द्वकुले उद्वोढुः सपिण्डकन्यानां त्रिषष्टिरूपामवान्तरसंख्यां तावदाह एकस्मादिति । प्रथममेकं मिथुनं ततः पुनः कन्याचेति द्वन्द्वं द्वितीये स्थाने ततः प्रत्येकं ताभ्यां कयाचित्केनचिन्मिथुनभावं गताभ्यां पुत्रः कन्याचेति द्वन्द्वद्वयं तृतीये ततो द्वन्द्वद्वयात्तथैव रीत्या द्वन्द्वचतुष्टयं चतुर्थे ततश्चतुष्टयात्तथैव रीत्या द्वन्द्वाष्टकं पञ्चमे ततोष्टकात्तेनैव प्रकारेण षोडश द्वन्द्वानि षष्ठे तेभ्यः षोडशेभ्यो ऽनेनैव प्रकारेण द्वात्रिंशद्वन्द्वानि सप्तमे स्थान इति द्वितीयस्थानप्रभृतिषष्ठपर्यन्तमेकत्रिंशद्वन्द्वान्तर्गता एकत्रिंशत्कन्याः सप्तमस्थानगतद्वात्रिंशद्वन्द्वान्तर्गताभिस्तावतीभिः कन्याभिस्त्रिषष्टिः संपद्यते । इयं संख्याग्निक्रतव इति पदेनाभिधीयते । अग्नयस्त्रय क्रतवः षट् गणकरीत्या प्रातिलोम्येनाङ्कपक्षे एतत्संपत्तेः पूर्वोक्तद्वात्रिंशद्वन्द्वेषु प्रत्येकत्रिषष्ट्यङ्गीकारेण पितृवंशे षोडशभिरधिका द्विसाहस्री कन्यानां संपद्यते इयं संख्या रसैकखदृश इति पदेनाभिधीयते रसाः षट् खं शून्यं दृशौ द्वे उक्तरीत्या २०१६ ईदृशाङ्कसिद्धेः वरस्य मातृवंशे उक्तरीत्यैव आरम्भकद्वन्द्वसंख्योपन्यासपूर्वकं कन्यानां पञ्चोत्तरसंख्यां वक्तुमाह मातुरिति । अत्रापि वरः प्रथमे स्थाने तस्य पितरौ द्वितीये मातुः पितरौ तृतीये द्वन्द्वमेकं तयोः प्रत्येकं जनकद्वन्द्वं चतुर्थे तद्वटकानां चतसृणां व्यक्तीनां प्रत्येकं जनकद्वन्द्वचतुष्टयं पञ्चमे एतेषां सप्तद्वन्द्वानां मध्ये एकैकान्वये पञ्चदश सपिण्डाः कन्या भवन्ति यत्किंचिदेकं द्वन्द्वं कूटस्थं प्रथमे स्थाने ततः पुत्रो दुहिता चेति द्वन्द्वं द्वितीये प्रत्येकं ताभ्यां जातद्वन्द्वयुगं तृतीये ततः पूर्वोक्तरीत्या द्वन्द्वचतुष्टयं चतुर्थे ततस्तथैव रीत्या द्वन्द्वाष्टकं पञ्चमे एवं पञ्चदशद्वन्द्वप्रविष्टाः पञ्चदश कन्याः संपद्यन्ते इयं संख्या शरक्षोण्यपदेनाभिधीयते शराः पञ्च क्षोण्येकेति उक्तसप्तद्वन्द्वेषु प्रत्येकं पञ्चदशसंख्याङ्गीकारे च पञ्चोत्तरशतसंख्यासंपत्तिः सा च शराभ्रविधव इत्यभिधीयते शराः पञ्च अभ्रं शून्यं विधुरेक इति । कुलेति पञ्चमश्लोके पूर्वोक्तपितृवंशं गतायाः षोडशाधिकद्विसहस्रसंख्यायां मातृवंशगतया पञ्चोत्तरशतसंख्यया मेलनेन महासंख्या एकविंशतिसहितशताधिकद्विसाहस्री रूपोच्यते । हिमांशुदृग्धरादृश इति हिमांशुरेकः दृशौ द्वे धरैका दृशौ द्वे उक्तरीत्या २१२१ ईदृशाङ्कसिद्धेः ततश्चैतावत्यः कन्याः कुलद्वयगता मुख्यकल्पेन विवाहकर्मणि वर्जनीया इत्यर्थः ॥

[The entire drift of this and the two preceding passages being given in the body of the work, they have not been translated.]

TABLE I.

*Ascendants through the Father.*

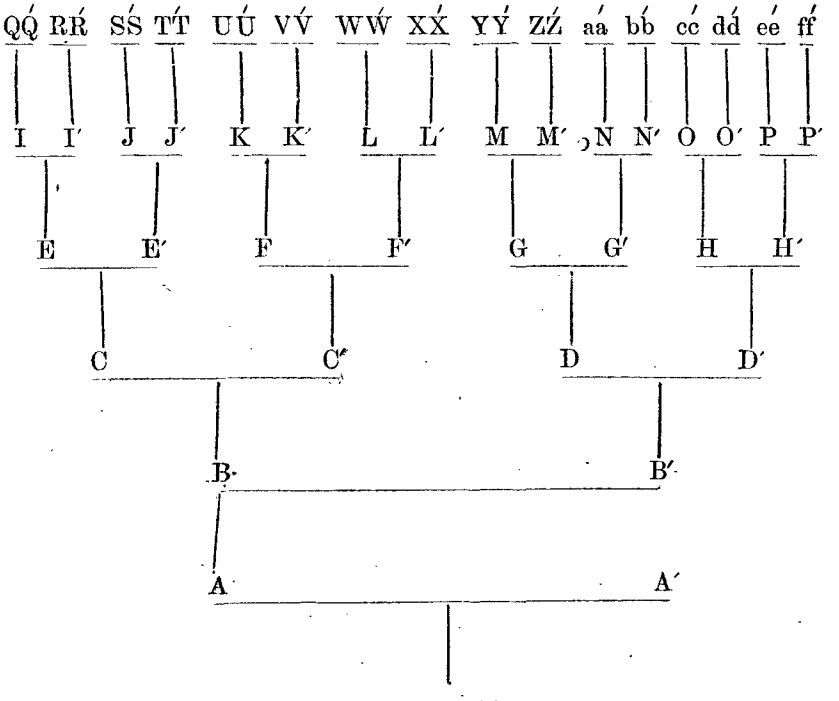


(1) *The bride or bridegroom.*

*Explanation.*

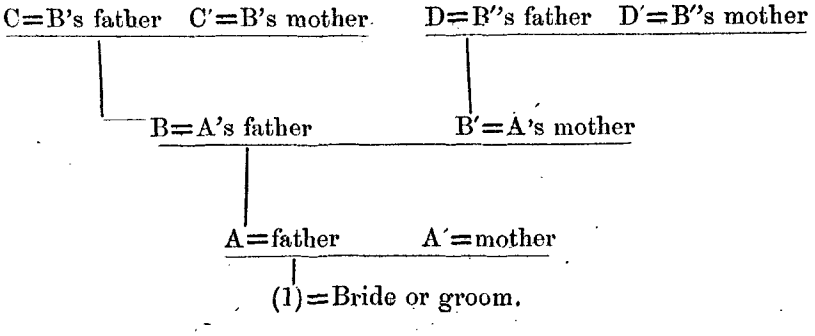

## TABLE II.

*Descendants through the Father.*

Any one of the thirty-two pairs indicated in Table I.

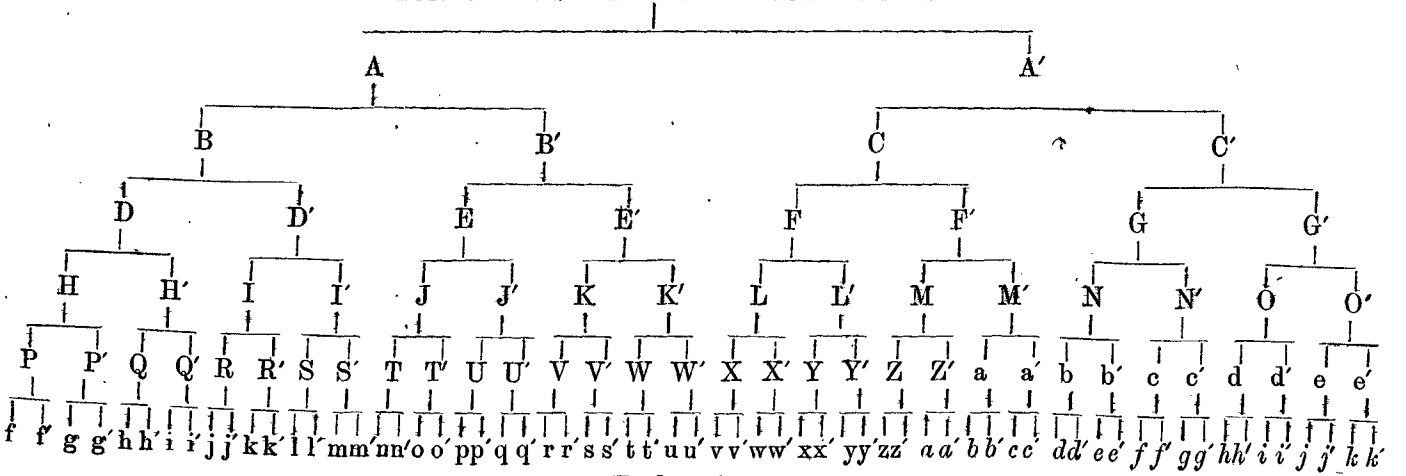


*Explanation.*

One of the 32 pairs shown in Table I.

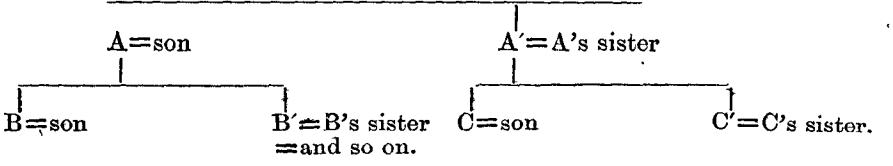

TABLE III.

*Ascendants through the Mother.*

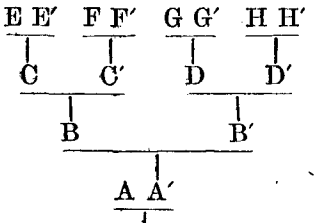


(1) *The bride or bridegroom.*

TABLE IV.

*Descendants through the Mother.*

Any one of seven pairs in Table III., excluding A A′ as already included in Table I.

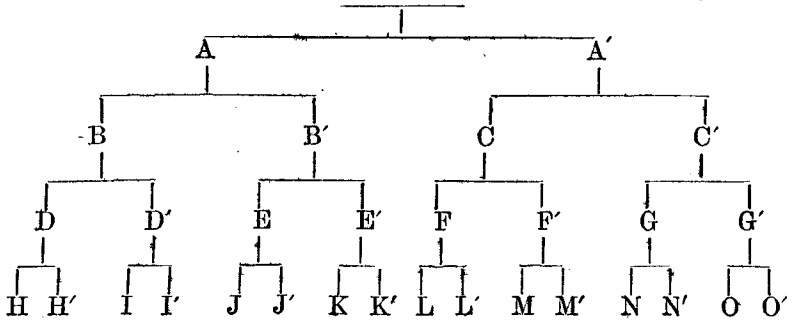


Tables I. and II. together are required to show the *Sapiṇdas* on the father's side who cannot be married. Table I. gives the 32 ascending stems. Each of these 32 stems branches into 63 male and 63 female descendants, who are the Sapiṇdas of the (1) at the base of Table I. The females in Tables I. and II. are represented by a stroke on the letter, which in Table I. signifies that the letter with the stroke is the wife of the male signified by the letter without the stroke; and in Table II. the stroked letter is the sister of the male for whom the letter without the stroke stands. The number of stems in Table I. is in all 32; and the number of prohibited daughters in Table II. is 63; so that applying Table II. to each of the stems in Table I., the total number of brides unavailable on account of *Sapiṇda* relationship through the father is $32 \times 63 = 2016$. The explanation given in regard to the stroke on the letters in respect of Tables I. and II. applies also to Tables III. and IV. respectively. Table III. is a Table of ascendants to the 4th degree on the mother's side exclusive of the party considered and corresponds to Table I., which represents the father's side. It contains the stems on the mother's side, whose descendants are not married on

account of *Sapiṇḍa* relationship, and Table IV. shows the daughters unavailable as descending from any of the stems indicated in Table III. The number of stems in Table III. is 7, the first stem AA′ being included in Table I., and the number of prohibited daughters in Table IV. under each stem is 15; so that the total number of daughters unavailable by reason of their *Sapiṇḍa* relationship to the bridegroom through the mother is 7 × 15=105. These, together with the aforementioned 2016, make 2121; and represent all the daughters ineligible for marriage owing to their *Sapiṇḍa* relationship with the bridegroom either through the father or the mother. Counting the bride as the starting unit, the number of bridegrooms excluded will be the same.

There are two cases wherein this relationship has to be further extended, viz., where either the bride or the bridegroom happen to have a stepmother, or is adopted from another family. The text that governs this subject, as concerns the stepmother, is from Sumantu, viz., पितृपत्न्यः सर्वा मातरस्तद्भ्रातरो मातुला स्तद्भगिन्यो मातृष्वसार स्तद्दुहितरश्च भगिन्य स्तदपत्यानि भागिनेयानि अन्यथा सङ्करकारिणः स्युरिति. Translation:—"The wives of the father are all mothers, their brothers are maternal uncles, their sisters are mother's sisters, their daughters are sisters, and the offspring of those [daughters] are children of a sister. Otherwise there will be a prohibited intercourse (*i.e.* the non-observance of this rule will lead to prohibited intercourse)." There is a diversity of opinion on the interpretation of this passage. Some hold that *Sapiṇḍa* relationship in the case of the stepmother is the same as in the case of the natural mother to the fifth degree, while others consider that it extends only to those relations through the stepmother, who are specifically mentioned in the above text. Thus in the latter case while the brother of the stepmother would be unavailable for marriage, as being mentioned in the text, the son of that brother would not be so situated. The preponderance of authority, at any rate on this side of India, is in favour of the latter opinion. The Nirṇayasindhu, the Samskára Mayúkha, Dharmasindhu, Samskárakaustubha, and Gopínátha Bhaṭṭí (or Samskára Ratna Málá), all disapprove of the former interpretation, which is adopted by the eastern lawyers. According to the Mayúkha and others, therefore, the brothers and sisters of a stepmother and also the children of her daughters are to be held as unavailable for marriage, and these are in addition to the 2121 *Sapiṇḍas* that have been already mentioned.

The second exceptional case is that where the bridegroom is an adopted son. Here, again, the conflict of opinion is very great. The opinion of the majority of writers, however, which is accepted in this Presidency, is the one which was first enunciated by the Sápiṇḍya Dípiká, and followed by the Samskárakaustubha (l. 49 p. 1), Gopínáthabhaṭṭí, Dharmasindhu (*pari.* iii. 1st part l. 15 p. 1), and the Putrakalpalatá of Yajñeśvara Śástrin (p. 64). I quote it below as

given by the Dharmasindhu (*pari.* iii. part first l. 15 p. 1).[1] The substance of it is that for an adopted son, *Sapiṇḍa* daughters from the families both of his natural and of his adoptive father are not available, and the number of degrees to which that relationship is to extend, will depend on—(I.) firstly, whether the adopted boy had his *Upanayana* performed in the natural father's family; (II.) secondly, whether his *Upanayana* alone was performed in the adopter's family, the previous *Saṁskáras* having been performed in the natural father's family; and (III.) lastly, whether all his *Saṁskáras* commencing from the *Játakarman* to the *Upanayana* were performed in the adopter's family. In the first case, the *Sapiṇḍa* relationship extends in the family of birth to seven degrees through the father, and five degrees through the mother; and in the family of adoption, to three degrees both on the father's and mother's sides. In the second case, the relationship extends in both families to five degrees on the father's side and three degrees on the mother's side. In the third case it extends in the family of adoption to seven degrees on the father's side, and five on the mother's side, and in the family of birth to three degrees on the father's as well as mother's side.

It may be well here to note that the Nirṇayasindhu considers that, after adoption, the *Sapiṇḍa* relationship extends in both families to seven and five degrees on the father's and mother's sides respectively; while Nágojíbhaṭṭa thinks that that relationship with the family of birth ceases after adoption altogether. I quote below the concluding lines of the *Sápiṇḍya Pradípa* of Nágojíbhaṭṭa, as containing the adverse views of some writers on this subject, which he has met by his previous exposition.[2]

What I have said above embodies the general rules with regard to marriage; but it is necessary I should here note the exceptions to the above rules, which have been established either by text or usage; lest persons not acquainted with them might sometimes be disposed to set down all marriages not in exact accordance with the said rules as incestuous. In giving those exceptions I could not perhaps do better

[1] विवाहे तु सर्वदत्तकेन जनकपालकयोरुभयोरपि पित्रोर्गोत्रप्रवरसंबन्धिनी कन्या वर्जनीया । नात्र सप्तपुरुषं पाञ्चपुरुषमित्येवं पुरुषनियम उपलभ्यते । सापिण्ड्यं तु जनकगोत्रेणोपनयने जनकपितृमात्रोः कुले सप्तपुरुषं पाञ्चपुरुषं ग्रहीतृमातृपितृकुले त्रिपुरुषम् । ग्रहीतृगोत्रेणोपनयनमात्रे कृते उभयत्र पाञ्चपुरुषं पितृकुले । मातृकुले तु त्रिपुरुषम् । जातकर्माद्युपनयनान्तसंस्कारे ग्रहीत्रा कृते ग्रहीतृकुले सप्तपुरुषं मातृतः पाञ्चपुरुषं अतोन्यूनं जनककुले कल्प्यम् ॥

[2] एतेन शुद्धदत्तकस्य प्रेतिग्रहीतृकुले त्रिपूरुषं सापिण्ड्यं जनककुले तु सप्तपौरुषं तदिति नन्दपण्डितोक्तिः उभयकुलेपि सप्तपौरुषमिति च शङ्करभट्टकमलाकरभट्टोक्तिः तत्समानानन्तदेवोक्तिश्च तत्स्वजनककुले सप्तपौरुषं पालककुले पञ्चमपर्यन्तमिति च गोविन्दार्णवोक्तिश्च कुलद्वयेपि त्रिपुरुषमिति च भट्टवासुदेवोक्तिश्चेति परास्तमित्यास्तां तावत्.

than quote the words of the Dharmasindhu,[1] as I think it summarizes there all the texts on this subject which have been fully discussed in the Achára Mádhava, the Nirnayasindhu, and the Samskárakaustubha:—

परंतु सापिण्ड्यसङ्कोचस्वीकारेऽपि कतिथौ कन्या कतिथेन पुरुषेण विवाह्या कतिथेन न विवाह्येति व्यवस्था नोपपादिता । सापिण्ड्यदीपिकाकारादयोऽर्वाचीनास्तु चतुर्थीमुद्वहेत्कन्यां चतुर्थः पञ्चमो वरः। पराशरमते षष्ठीं पञ्चमो नतु पञ्चमीमित्यादिवचनानां समूलत्वं निश्चित्य अशक्तैः सङ्कटे समाश्रयणीयस्य सापिण्ड्यसङ्कोचस्य व्यवस्थामूचुः । तथाहि । चतुर्थी कन्या पितृपक्षे मातृपक्षे च चतुर्थेन पञ्चमेन वा पुंसा विवाह्या । द्वितीयतृतीयषष्ठाद्यैश्चतुर्थी नोद्वाह्या । पराशरमते पञ्चमः षष्ठीमुद्वहेत् । पञ्चमः पञ्चमीं नोद्वहेत् । मातृतः पितृतश्चापि षष्ठः षष्ठीं समुद्वहेदिति वचनान्तरात् षष्ठेनापि षष्ठी विवाह्या । पञ्चमषष्ठभिन्नैः षष्ठी न विवाह्येति पर्यवसन्नम् । तथा पितृपक्षे सप्तमी मातृपक्षे पञ्चमी च तृतीयाद्यैः सर्वैः परिणेया । पितृपक्षाच्च सप्तमीं मातृपक्षात्तु पञ्चमीमिति व्यासवचनात् । उद्वहेत्सप्तमादूर्ध्वं तदभावे तु सप्तमीम् । पञ्चमीं तदभावे तु पितृपक्षेप्ययं विधिरिति चतुर्विंशतिमतोक्तेश्च । पितृपक्षेऽपि पञ्चमी तृतीयाद्यैः परिणेया तत्रापि मातृपक्षेऽपि पञ्चमेन पञ्चमी नोद्वाह्या पञ्चमो न तु पञ्चमीमिति सर्वत्र निषेधात् । तृतीयां वा चतुर्थीं वा पक्षयोरुभयोरपीति वचनात्तु तृतीया विवाह्या प्राप्नोति तत्र व्यवस्थोच्यते । मातृपक्षे तावत्तृतीया मातुलकन्या मातृष्वसृकन्या वा संभवति पितृपक्षे तु तृतीया पितृव्यकन्या पितृष्वसृकन्या वा तत्र पितृव्यकन्या सगोत्रत्वाच्याऽऽद्या पैतृष्वसेयी भगिनीं स्वस्रीयां मातुरेवच । एतास्तिस्रस्तु भार्यार्थे नोपयच्छेत बुद्धिमानिति मनूक्तेः । पितृष्वसृमातृष्वसृकन्ये अपि त्याऽऽद्ये पितृष्वसृकन्यां मातुर्भगिनीं मातृष्वसारं मातृष्वसृकन्यामेतास्तिस्रो नोद्वहेदिति तदर्थात् । मातुलकन्यैव तृतीया पूर्वोक्तरीत्या कुलपरम्परागतत्वे परिणेया । एवंच तृतीयापि तृतीयेनैव मातुलकन्यैव परिणेया न चतुर्थादिना केनापि । केचित्सङ्कटे पितृष्वसृकन्यापरिणयनमाहुः तत्र देशकुलाचाराद्व्यवस्था ज्ञातव्या अत्रायं सापिण्ड्यदीपिकादिसिद्धार्थसङ्ग्रहः तृतीया मातुलकन्यैवोद्वाह्या चतुर्थी चतुर्थपञ्चमाभ्यामेव पञ्चमी पञ्चमभिन्नैः तृतीयाद्यैः सप्तमान्तैः । षष्ठी पञ्चमषष्ठाभ्यामेव । सप्तमी तृतीयाद्यैः सप्तमान्तैरिति । अयं सापिण्ड्यसङ्कोचेन विवाहः सङ्कटेष्वशक्तेन कार्यः गुरुतल्पादिदोषस्मृतेः सापिण्ड्यसङ्कोचवाक्यानामशक्तविषयत्वस्य स्पष्टत्वात् । प्रभुः प्रथमकल्पस्य योनुकल्पेन वर्तते । स नाप्नोति फलं चेहेति शक्तैरनुकल्पस्वीकारे दोषोक्तेः ॥

Translation :—But admitting the legality of occasionally contracting the *Sapiṇḍa* relationship, nothing is [here] said as to which females may be married by which males [and] may not be married by which males; while modern [writers such as] the author of the Sápiṇḍya Dípiká and others, having accepted the authenticity of such texts as 'the fourth or the fifth male may marry the fourth female, and according to the opinion of Paráśara the sixth female; but the fifth male [shall] never [marry] the fifth female,' have laid down rules in regard to the restrictions on *sapiṇḍa* relationship, which may be adopted under difficulties by the helpless. Thus the fourth female may be married by the fourth or the fifth male on the father's or the mother's side; while the same may not be married by the second, the third, the sixth and the subsequent males; in the opinion of Paráśara the fifth male may marry the sixth female, but the second, the third, the fourth, and the subsequent males may not marry the sixth female. The fifth male may not marry the fifth (female). According to another text, viz., 'on the father's or on the mother's side, the sixth male may marry the sixth female,' the sixth

[1] See *pari.* iii. 1st half l. 50 p. 2 and l. 51.

male also may marry the sixth female. The conclusion therefore is that the sixth female may not be married by any one other than the fifth or the sixth male. So according to the text of Vyása 'also the seventh female on the father's side and the fifth female on the mother's side [is allowable,' and according to the *Chaturvimśatimata* (a compilation from the writings of twenty-four sages) '(one) beyond the seventh may be married; failing her, the seventh female, failing her the fifth female; the same rule (holds) on the father's side, the seventh female on the father's side, and the fifth female on the mother's side, may be married by the third and all the subsequent males. On the father's side also, the fifth female may be married by the third and the subsequent males; even there [*i. e.* on the father's side], and on the mother's side the fifth male may not marry the fifth female; for the prohibition 'the fifth male never the fifth female' is general. [We now] give rules in the case of the third female who becomes eligible for marriage according to the text 'the third female or the fourth female on both the sides [may be married].' The third female on the mother's side may be either mother's brother's daughter or mother's sister's daughter, while on the father's side the third female [may be] either father's brother's daughter or father's sister's daughter. Of these the father's brother's daughter should be left out, since she is of the same *gotra* (family). Daughters of the father's sister and of mother's sister should also be left out in accordance with the text of Manu, viz., 'a wise man may not marry three females, viz. the father's sister's daughter, the mother's sister [and] mother's sister's daughter. The meaning of the said text is that [one] should not marry the following three females, viz. *Paitṛishvaseyí* (father's sister's daughter), *Matur Bhaginí* (mother's sister), and *Mátuh Svasríyá* (mother's sister's daughter). The mother's brother's daughter [is therefore] the only third female who may be married in the manner before mentioned, if there be [such] a custom in the family. Thus of the third females, the mother's brother's daughter alone may be married; [and that too] by the third male alone [and] not by the fourth or any subsequent male. Some allow a marriage with the daughter of the father's sister under difficulties; here the rule should be understood [as binding where and when it derives support] from the usage of the country or the family. On this subject [the following] is the summary of the conclusions in the Sápiṇḍya Dípiká and other [works]. [Of] the third female, mother's brother's daughter alone may be married; the fourth female by the fourth or the fifth male alone; the fifth female by [all] from the third [male] down to the seventh male except the fifth one; the sixth female by the fifth or the sixth male alone; [and] the seventh female by [all] from the third male to the seventh male. This marriage by restrictions on *Sapiṇḍa* relationship may be performed by a person in need [and]

under necessity; as it is said [that it brings on] the sin of violating the bed of the preceptor, and as it is clear that the texts restricting *sapiṇḍa* relationship apply [only] to needy persons in so far as sin is said to attach to the adoption of an alternative by one who can adopt [the primary rule], according to a text [which says] 'he who [being] capable of [performing] the primary [commandment] adopts the alternative [one] does not here get the merit [resulting from it].'

In reference to the above translation, it must be remembered that cardinal numbers stand for the degrees of descent from the first common ancestor. Thus that the fourth male may marry a fourth female means that a male descendant of the third degree may marry a female descendant of the third degree from the first common ancestor.

The Nirṇayasindhu thinks that all the texts that contract the *sapiṇḍa* relationship for the purpose of marriage refer to persons other than the twice-born, and would therefore never permit such prohibited marriages under any circumstances (see *pari.* iii. 1st half l. 23 p. 2 to l. 24 p. 2). The Saṃskárakaustubha refutes the opinion advocated by the Nirṇayasindhu, and supporting Mádhava, lays down a general proposition that the contraction of the *sapiṇḍa* relationship for the purpose of marriage is lawful, wherever it is sanctioned by the usage of the country or that of the family. Usage has modified the text law on the subject of marriage to such a degree that it would not be just to shut one's eyes against that usage. For independently of such usage, there is really no other Hindu law on the subject. For further remarks in this respect of usage as connected with *sapiṇḍa* relationship, I must refer to my appendix on customary law further on.

## SECTION II.

### *Impurity on account of birth or death.*

The *Sapiṇḍa* relationship with which we are now concerned is limited to persons who belong to the same *gotra*.[1] It is true that a man has to observe mourning for certain relations through the mother, through his wife, and his father's sisters; but it must be understood that he does so in virtue of special texts and not owing to their *Sapiṇḍa* relationship. The extent of this relationship, as far as the present Section is concerned, is as follows:—

[1] See the Sápiṇḍya Pradípa of Nágojíbhaṭṭa who says on this subject:—सगोत्रत्वसमानाधिकरणसापिण्ड्यमेव दशाहाशौचादौ प्रयोजकम् ।. Translation:—"*Sapiṇḍa* relation should be accompanied by community of *gotra* before it can be a cause of impurity of ten days and the like."

(1.) All male ascendants through males up to the sixth degree, together with their descendants *through males* down to the sixth degree;

(2.) All male descendants of himself and of the said ascendants through males down to the sixth degree;

(3.) The wives of the above classes, (1) and (2).

Where a man does not know his *gotra*, or has none, as in the case of the last three classes, his impurities are to be determined by his relationship as laid down in the above three classes. No impurity on account of birth is observed in the case of an *Asagotra*.

As to how far adoption affects the question of impurity, it appears from Dattakachandriká p. 59, and its translation in paragraph 1, section iv., p. 652 Stokes' Hindu Law Books, that in the case of a simple adoption, the *Sapiṇda* relationship is confined to the family of adoption, and is so far not exceptional as far as impurity is concerned. In the case of a *dvyámushyáyaṇa* adoption, (which is not in use at present), the relationship extends in both families; but this rule is now a dead letter.

The rule in regard to the relationship through a stepmother, which was mentioned in Section I., holds good in this Section also. Such relationship is held to extend only to such relations through a stepmother as have been specifically mentioned in the aforesaid text of Sumantu.

## SECTION III.

### *Inheritance.*

As regards inheritance, the *sapiṇda* relationship is, to a certain extent, of the same class as that for regulating impurities. Thus male *sapiṇdas* through the father and through males for six degrees, and their male descendants for six degrees as well as his own, are capable of inheriting as *sapiṇdas*. Their order amongst themselves will be stated further on.

As regards females, they inherit by virtue of special texts. This seems to be so both on the texts and by inferences drawn therefrom. I will quote a few out of the principal authorities bearing on this question. *A'pastamba* (II. 6, 14, 2) says;—पुत्राभावे यः प्रत्यासन्नः सपिण्डः (on failure of sons, the nearest *sapiṇda* [takes the inheritance.]) Here the word *sapiṇda* is used in the masculine, and precludes the idea of a female being included in that word. Haradatta in his commentary on this *Sútra* says that Ápastamba hereby clearly lays down that females are not entitled to inheritance, and goes so far as to hold that even those females

who have been named in some texts apparently as entitled to inheritance are in virtue of those texts entitled to protection and maintenance at the hands of the *sapiṇḍas* who take the inheritance (see *Ápastamba Dharmasútra*, vol. II. pp. 81 and 82, and Sacred Books of the East, vol. II. p. 132, Note 2.)

The Víramitrodaya (leaf 209 p. 1, line 3) quoting Baudháyana as cited by Jímútaváhana, speaks as follows :—अत एव अर्हति स्त्रीत्यनुवृत्तौ बौधायनः। न दायं निरिन्द्रिया अदायादाश्च स्त्रियो मता इति श्रुतेरिति। न दायमर्हति स्त्रीत्यन्वयः। Translation :—Therefore Baudhayana repeating the words *strí arhati* (a female deserves) [from the preceding verse] says :—A female does not deserve to inherit, being declared by the *Sruti* to be feeble and incompetent to inherit. The words *na dáyam* (no inheritance) are to be construed along with *strí arhati* (a female deserves).

Gautama observes :—पिण्डगोत्रऋषिसम्बन्धा रिक्थं भजेरन् स्त्री चानपत्यस्य। Translation :—Of one without issue, the wealth goes to those [who are] connected with him by the *sapiṇḍa* relationship, by *gotra* or by *pravara*, as well as to the wife. Haradatta in his comment on this says :—स्त्री तु सगोत्रादिभिः सैवैः समुच्चीयते। यदा सगोत्रादयो गृह्णन्ति तदा तैः सह पत्न्यपि एकमंशं हरेत्। Translation :—The wife takes [the wealth] along with the *sagotras* (men of the same *gotra*) and the like. When *sagotras* and the rest take [the wealth], the widow too takes one share along with them. It will thus appear that even the widow of the deceased is not permitted by Gautama to inherit independently of the male relations.

Gautama therefore must be taken to be opposed to the succession of females generally in accordance with the Vedic text which Haradatta has cited in his comments.

Vasishṭha in his chapter on succession (see Part II. pp. 486—490 Cal. ed.) does not mention any female as entitled to inherit save the appointed daughter. In default of the sons, he says :—अतऊर्ध्वं समानोदकपिण्डजन्मर्षिगोत्राणां पूर्वैः पूर्वो गरीयान्। न खलु कुलीने विद्यमाने परगामि स्यात्। यस्य पूर्वेषां षण्णां न कश्चिद्दायादः स्यात्सपिण्डाः पुत्रस्थानीया वा तस्य धनं विभजेरन्। तेषामलाभे आचार्यान्तेवासिनौ हरेयातां तयोरलाभे राजा हरेत्। Translation :—In default of these, the prior in order among those connected by libation of water or libation of *piṇḍa*, by birth, *pravara* or *gotra* is preferential [for succession to another subsequent]. So long as there is any descendant of the family, surely [the inheritance] will not go to a stranger. If one has none of the first six to take his wealth, his sapiṇḍas or men standing towards him in place of the son will take his wealth. Failing these, the preceptor and the pupil will take; and failing those, the king.'

Here the widow herself has no place; and so Vasishṭha too must be taken as opposed to the succession of females.

From the above texts it appears that all ancient authority is opposed to the succession of females generally. They are thus useful in determining the capacity of female *sapiṇḍas* to inherit. This question arises with reference to verse 187, chapter ix. of Manu, and verses 135 and 136 of Yájñavalkya, chap. ii. In the former *sapiṇḍá dyah* (सपिण्डद्याः) has been interpreted by Kulluka so as to include males as well as females; and in the latter the word *gotrajah* (गोत्रजाः) is capable of being so interpreted as to stand for males as well as females. Some have maintained on the strength of the above that the widows of all *Gotraja sapiṇḍas* inherit; while others hold that those females only who have been expressly mentioned, do so inherit. My investigations have led me to the latter conclusion.

In regard to *sapiṇḍas*, the following are some of the facts found in the two Smritis mentioned in the above paragraph.

Manu refers to *sapiṇḍas* on three occasions:—1 Marriage[1]; 2, impurity[2]; and 3, inheritance.[3]

In the first case, he says the bride should be "an *asapiṇḍá* of the mother, and an *asagotrá* of the father." In the second, he says "*sápiṇḍya* (the *sapiṇḍa* relationship) ends with the seventh *purusha* (person)." In the third case "to the next amongst *sapiṇḍas*, *dhanam* (wealth) belongs."

Yájñavalkya speaks of the extent of *sapiṇḍa* relationship in his first chapter in discussing the subject of marriage. Thus in verse 52, he says the bride must be an *asapindá*,[4] which he explains in verse 53 to be one removed five and seven degrees on the mother's and the father's sides respectively.[5]

We take Yájñavalkya on this side of India as interpreted by Vijñáneśvara. We must therefore ascertain what the latter says of the *sapiṇḍa* heirs. How these enter into Vijñáneśvara's succession scheme must be the next point in the inquiry. Vijñáneśvara divides succession into two classes, the *apratibandha* (unobstructed) and the *saprati-bandha* (obstructed), or, as I would here call them, the regular and irregular orders of succession.

The *sapiṇḍas* as such do not enter into the regular or *apratibandha* (unobstructed) scheme of succession of Vijñáneśvara. This last is confined to the sons, sons' sons, and sons' grandsons.[6] When these three classes of heirs do not exist, comes what I would call the irregular or exceptional course of succession—which Vijñáneśvara calls the *saprati-bandha* (obstructed) sucession.[7] As regards the Gauḍa or eastern writers the words *sapratibandha* and *apratibandha* do not occur. But

[1] Manu, ch. iii., v. 5. [2] Id., ch. v. v. 60. [3] Id. ch. ix., v. 187.
[4] See above Part II. p. 167. [5] See above Part II. p. 168.
[6] Yájñ. ch. ii. vv. 117, 132; Manu, IX. 104, 185.
[7] Mit. ch. ii. l. 46. p. 1 lines 4—7.

that is not important for the present purpose. In the course of the irregular or *sapratibandha* succession come the following according to Yájñavalkya :—पत्नी दुहितरश्चैव पितरौ भ्रातरस्तथा। तत्सुता गोत्रजा बन्धुशिष्यसब्रह्मचारिणः॥ (ch. ii. v. 135). See the translation above Part II. pp. 220 and 221.

In commenting on this verse Vijñáneśvara introduces *dauhitra* (the daughter's son) after *duhitṛi* (the daughter) in consequence of the syllable *cha* occurring in the original. After *cha*, come the *pitarau* (parents), the brothers and their sons, and after these the *Gotrajas*. About these last Vijñáneśvara says as follows :—भ्रातृपुत्राणामप्यभावे गोत्रजा धनभाजः। गोत्रजाः पितामही सपिण्डाः समानोदकाश्च। Translation :—Failing the brother's sons, those born in the same *gotra* are takers of wealth. They are the father's mother, the *sapiṇḍas* and the *samánodakas*.

Vijñáneśvara thus accounts for the father's mother being placed here :—मातर्यपि च वृत्तायां पितुर्माता धनं हरेदिति मात्रनन्तरं पितामह्या धनग्रहणे प्राप्ते पित्रादीनां भ्रातृसुतपर्यन्तानां बद्धक्रमत्वेन मध्येऽनुप्रवेशाभावात्पितुर्माता धनं हरेदित्यस्य वचनस्य ग्रहणाधिकारप्राप्तिमात्रपरत्वात् उत्कर्षे तत्सुतानन्तरं पितामही गृह्णातीत्यविरोधः। (leaf 60 p. 1 lines 7—9). Translation :—'The paternal grandmother's succession immediately after the mother was seemingly suggested by the text before cited, "And the mother also being dead, the father's mother shall take the heritage"[1] : no place, however, is found for her in the [*baddhakrama*] compact series of heirs from the father to the nephew: and that text ("the father's mother shall take the heritage") is intended only to indicate her general competency for inheritance. She must, therefore, of course succeed immediately after the nephew; and thus there is no contradiction.' (See Colebrooke's Mitáksbará ch. ii. sec. v., para. 2 Stokes' Hindu Law Books p. 446.)

After her come (समानगोत्रजाः सपिण्डाः पितामहादयो धनभाजः) the *Samánagotraja Sapiṇḍas*, [who are] the *Pitámaha* (the father's father) and the like.

He again amplifies the same :—तत्रच पितृसन्तानाभावे पितामही पितामहः पितृव्यास्तत्पुत्राश्च क्रमेण धनभाजः पितामहसन्तानाभावे प्रपितामही प्रपितामहस्तत्पुत्रास्तत्सूनवश्चेत्येवमासप्तमात्समानगोत्राणां सपिण्डानां धनग्रहणं वेदितव्यम्। Translation :—Here on failure of the father's issue the heirs are successively the paternal grandmother, the paternal grandfather, the paternal uncles and their sons. On failure of the paternal grandfather's issue, the paternal great grandmother, the great grandfather, his sons and son's sons inherit. In this manner must be understood the succession of [those who are] *Sagotras* (of the same family) as well as *sapiṇḍas*.

Viśveśvara, in his Subhodhiní, while explaining the phrase *Gotrajábháve* (on failure of the *Gotrajas*) used by Vijñáneśvara in the sentence गोत्रजाभावे बन्धवो धनभाजः (On failure of the *Gotrajas*, the *Bandhus*

[1] Manu, IX., 217.

take the wealth),[1] completes the enumeration of the *Gotrajas* on the basis indicated by Vijñáneśvara in the above extract, thus :— पितामहीपितामहपितृव्यतत्पुत्राणां प्रपितामहीप्रपितामहपितामहभ्रातृतत्पुत्राणां प्रपितामहमातृप्रपितामहपितृप्रपितामहभ्रातृतत्पुत्राणां प्रपितामहपितामहीप्रपितामहपितामहप्रपितामहपितृव्यतत्पुत्राणां प्रपितामहप्रपितामहीप्रपितामहप्रपितामहप्रपितामहपितामहभ्रातृतत्पुत्राणां समानोदकेष्वप्येनेन न्यायेन तेषामभाव इत्यर्थः

Translation :—[On failure] of the father's mother, father's father, father's brothers, and their sons, of father's father's mother, father's father's father, father's father's brothers and their sons; of father's father's father's mother, father's father's father's father, father's father's brothers and their sons; of father's father's father's mother, father's father's father's father's father, father's father's father's father's father's brothers and their sons. The meaning is that [on failure of these and] on failure of the *Samánodakas*, this same analogy [being pursued] in their case, [the Bandhus take].

The Víramitrodaya on the subject of the succession of *Gotrajas* says :—

भ्रातृपुत्राभावे गोत्रजाः । पूर्वोक्तपितृभ्रातृतत्सुतभिन्ना गृह्यन्ते गोबलीवर्दन्यायात् । ते च पितामही सपिण्डाः समानोदकाश्च । तत्र प्रथमं पितामही धनभाक् । मातर्यपि च वृत्तायां पितुर्माता हरेद्धनमिति मानवान्मात्रनन्तरं पितामह्या धनग्रहणे प्रसक्ते पित्रादीनां भ्रातृसुतपर्यन्तानां बद्धक्रमाणामन्तस्तदनुप्रवेशासम्भवादुत्क्रर्षेण्यग्रे तदुत्कालनकारणाभावात्तदनन्तरं पितामहादयोऽन्ये गोत्रजा इति विज्ञानेश्वरः । अत्र स्मृतिचन्द्रिकायां गोत्रजा इत्यत्र सरूपैकशेषेण पुमांस एव गोत्रजा न तु स्त्रीरूपाः । विरूपैकशेषो हि कुक्कुटावानय मिथुनं करिष्याम इत्यादिवाक्यशेषादिसमभिव्याहारादिप्रमाणान्तरावगतात्पर्यग्रहनिबन्धनः । नचात्र प्रमाणमस्ति । प्रत्युत भ्रातृतत्सुतसाहचर्यं पुंगोत्रजग्रहण एव साधकमस्ति किंच पत्नीदुहित्रादीनां गृह्यग्राहिकया धनग्रहणाधिकारोक्तेस्तस्मात्स्त्रियो निरिन्द्रिया अदायादा इति श्रुतेरस्तु तद्व्यतिरिक्तविषयता । गोत्रजादिस्थले तद्विरोधाद्विरूपैकशेषकल्पनैव ह्रातुमर्हा । अतएव जीवत्पुत्रेभ्यः पिता दायं विभजेदित्यापस्तम्बसूत्रंव्याचक्षाणेन तद्भाष्यकारेण पुत्रेभ्य एव दायं विभजेत् न स्त्रीभ्यो दुहितृभ्य इत्युक्तेक्तं यद्यपि भ्रातृपुत्रौ स्वसृदुहितृभ्यामिति पाणिनिस्मरणात्पुत्रेभ्य इत्यत्र पुत्राश्च दुहितरश्चेति विगृह्य विरूपैकशेषेण दुहितृणामप्यत्रपुत्रेऽनुप्रवेशः शक्यते कर्तुं तथापि पुमांसो दायादा न स्त्रियः तस्मात्स्त्रियो निरिन्द्रिया अदायादा इति श्रुतेरिति । श्रुतिविरोधात्तात्पर्यग्राहकमानाभावाच्च विरूपैकशेषोऽनुशिष्टोऽप्यत्र न ग्राह्य इति भाष्यकाराभिप्रायः । जीमूतवाहनोऽपि याज्ञवल्क्येन च पित्रादिदौहित्रस्यापि तद्गोत्रजातस्य पिण्डदानान्तर्यकमेणाधिकारप्रतिपत्स्यर्थं गोत्रजपदग्रहणं कृतं । सपिण्डस्त्रीणां व्युदासार्थं तासामतद्गोत्रजातत्वात् । अत एव अर्हति स्त्रीत्यनुवृत्तौ बोधायनः । न दायं निरिन्द्रिया अदायाश्च स्त्रियो मता इति श्रुतेरिति । न दायमर्हति स्त्रीत्यन्वयः । पत्न्यादीनां स्वाधिकारो विशेषवचनादविरुद्ध इति । तन्न साधुः । मन्वादिवचनेषु प्राग्लिखितेषु पितामह्या धनाधिकारस्य गृह्यग्राहिकयैव विधानात्तदेकवाक्यतया योगीश्वरवचनस्यापि विरूपैकशेषेण तत्संग्रहेपि श्रुतेस्तदन्यपरत्वेनाविरोधात् । जीमूतवाहनस्य तु मात्रधिकारविचारप्रस्तावे पितामहसन्तानात्पूर्वं पितामहाच्च परतः पितामह्या धनाधिकारः पितृतः परतो मात्रधिकारवत् । याज्ञवल्क्येन मात्रधिकारप्रदर्शनेनैव पितृ-

[1] See Mit. ch. ii. l. 60, p. 1, l. 13 and Colebrooke's translation ch. ii. sec. vi., para. 1, Stokes' Hindu Law Books p. 448.

व्यादिभ्यः ..पूर्वं पितामहपितामह्योरधिकारस्य सूचितत्वात्पृथङ्नोक्त इति वदंतोऽत्र च सपिण्डस्त्रीत्युदासार्थं गोत्रजग्रहणं वदतः पूर्वापरविरोधानुसन्धानमपि नास्ति । शृङ्गग्राहिकया योगीश्वरवचने पितामह्याः पितृव्यादिपत्नीवदनभिधानस्य तुल्यत्वात्तद्वदेवादायादश्रुतिप्रवृत्तेरविरोधात् । विद्यारण्यश्रीचरणोक्तप्रक्लिखिततत्स्मात्रिरिन्द्रिया इत्यादिश्रुतिव्याख्याने तु स्त्रीणां दायग्रहणप्रतिषेधकत्वमेवास्याः श्रुतेर्नास्तीति नवा शङ्का न चोत्तरं । परंतु बौधायनमुनिवचनविरोधे तद्व्याख्यानं कथमुपपद्यतां । अस्तु वा इन्द्रियपदस्य वाक्यशेषात्सोमपरता तथापि दायादत्वाभावाभिधानावलम्बनस्यान्यस्यासत्वान्निरालम्बनश्रुतेश्चासम्भवान्सिद्धवत्कीर्तनानुपपत्तिप्रसूतप्रतिषेधकल्पनावश्यम्भावात् । तस्माद्भेणाविज्ञातेन हतेन ब्रह्महेत्यत्रेवेति ध्येयं । पितामह्या अभावे पितामहादयः सगोत्राः सपिण्डा धनभाजः । भिन्नगोत्राणां सपिण्डानां बन्धुशब्देन ग्रहणात् । तत्रापि पितृसन्तानाभावे पितामही पितामहः पितृव्यास्तत्पुत्राश्च क्रमेण धनभाजः । पितामहसन्तानाभावे प्रपितामही प्रपितामहस्तद्भ्राता तत्सूनवश्चेत्येवमासप्तमात्समानगोत्राणां सपिण्डानामपुत्रधनभाक्त्वम् । सपिण्डाभावे समानोदकानाम् । तेच सपिण्डानामुपरिसप्त । जन्मनामज्ञानावधिका वा । यथाह मनुः । सपिण्डता तु पुरुषे सप्तमे विनिवर्त्तते । समानोदकभावस्तु निवर्तेतातचतुर्दशात् । जन्मनाम्नोः स्मृतेरेके तत्परं गोत्रमुच्यत इति । विष्णुवचने बन्धुसकुल्यपदाभ्यां सपिण्डसगोत्रौ गृह्येते इति प्रागेव प्रतिपादितं । समानोदका अपि प्रत्यासत्तिक्रमेण धनभाजः ।

Translation :—Failing brother's sons, *Gotrajas* [succeed]. On the analogy of [the use of] *balivarda* (a bull) after *go* (the bovine genus), [*gotrajas*] other than the aforesaid father, brother and brother's son are to be understood [here by that term]. Vijñáneśvara says that they are the father's mother, *sapiṇḍas* and *samánodakas*, that of these the father's mother first takes the wealth ; and that although from the Manu's text [ch. ix. v. 217], 'if the mother be dead, the father's mother will take the wealth' [the right of] the father's mother to take wealth after the mother follows, yet it being impossible to introduce her into the fixed order ending with brother's sons, and there being no reason why she should be placed last [of all the heirs, simply because] she has to be removed [beyond her position in the Manu's text], the *gotrajas* commencing with the father's father [inherit] after her [*i. e.* the father's mother]. Here the Smṛiti Chandriká understands the term *gotrajáh* as a *sarúpaikaśesha* (a grammatical formation wherein one only of exactly similar words remains and the rest are omitted)[1] of male *gotrajas* alone and not of female [ones]. A *virúpaikaśesha* (a grammatical formation where one alone of dissimilar words remains, and the rest are omitted)[2] is to be understood, [only] where [such interpretation] is indicated on independent grounds, such as the statement of a supplementary sentence as in [the words] 'bring *kukkutau* (which may primarily mean either two cocks or two hens, but which, owing to the sentence that follows here, means a cock and a hen) ; we shall unite them.' There is no such indication here [*i. e.* in the case of the word *gotrajáh*]. On the other hand, the companionship [of that word] with 'brothers, and his sons,' favours its signifying male *gotrajas* [only]. Again, the wife, the daughter and the like being specifically[3] mentioned as entitled to inherit, the Śruti '[text] 'Therefore females are feeble and incompetent to inherit,' will [indeed] have to be taken to apply [not to them but] to women other than the [said wife, daughter, &c.] ; but in places like the *gotrajáh*, a *virúpaikaśesha* is opposed to the said [Śruti], and therefore its suggestion deserves to be rejected. Therefore it was that the *Bháshyakára* (commentator) of Ápastamba, while commenting on the *Sútra* (text) 'the father should divide his wealth among his sons in his lifetime, &c.' first stated that the wealth should be distributed among sons alone, and not among females, such as daughters, and then said, although according to the Páṇini's rule '[the words]

[1] See Páṇini I. 2, 64.

[2] See Páṇani I. 2, 67.

[3] The Sanskrit word is *Sringagráhikayá*, which literally means 'by holding [a cow, &c.] by the horns,' is now used to mean 'forcibly or in defiance of opposition.'

*bhrátṛi* (brother) and *putra* (son) [when compounded] with *svasṛi* (sister), and *duhitṛi* (daughter), &c.'[1] it is possible to dissolve the word *putrebhyah* (among sons) as a *virúpaikaśesha* as *putráscha duhitarscha* (sons and daughters), and so to introduce the daughters after the sons, yet males alone and not females are heirs in accordance with the Śruti, 'therefore females are feeble and not entitled to inherit.' The intent of the commentator is that the *virúpaikaśesha* [construction], though allowed [by grammarians], should not be accepted in the present case owing to its repugnance to a Śruti text, and the absence of an indication warranting such [construction]. Jímútaváhana too says: "Yájñavalkya too has used the word *gotraja* in order to denote that the right [of inheritance] belongs to one born in the family such as the father's daughter's son and the like in that order, which is followed for the purpose of offering a *pinda* (a libation of rice) and that the wives of the sapiṇḍas are to be excluded, as not being *gotraja* (born in the family). Accordingly repeating [the words] *arhati stri* (a female deserves) [from the preceding verse] Baudháyana says '[females do not deserve] to succeed, as they are deemed feeble and disentitled to inherit, according to Śruti. [The words] *na dáyam* (no inheritance) are to be construed with *arhati stri* (a female deserves). The right of the widow and the like [to inherit] is unobjectionable owing to special texts [to that effect]." This is not correct, for it is possible to reconcile [all the three texts, viz., the Śruti, Manu and Yájñavalkya] by [holding that] the *virúpaikaśesha* [construction] is to be adopted in [interpreting] the [present] text of Yájñavalkya, so as to include the father's mother [in the word *gotrajáh*], and thus to harmonize with the aforementioned texts of Manu and the like, which specifically declare her capacity to inherit, and [further] that the Śruti is to be taken applying to women other than those [expressly mentioned]. As for Jímútaváhana he is not consistent with himself, for [in one place] viz., his disquisition on the mother's right [of succession], he says that on the analogy of the mother's right [of succession] after the father, the father's mother succeeds after the father's father and before his issue, and that Yájñavalkya said nothing separately [about the succession of the father's father and the father's mother], because in laying down the right of the mother [to inherit], he had indicated the right of the father's father and the father's mother [to inherit] before the father's brother and the like; and [in another place] he says that the use of [the word] *gotraja* [by Yájñavalkya] was [made], in order to exclude the wives of *sapiṇḍas*. [I say Jímútaváhana is inconsistent], because in his latter [statement] the Śruti which disables [females] from inheritance will apply to the father's mother as much as to the father's brother's widow, owing to the former resembling the latter in an absence of a specific mention in the Yájñavalkya's text [under consideration]. According to the explanation given by the venerable Vidyáraṇya, of the aforementioned Śruti, 'Therefore [females are] feeble, &c.,' that Śruti does not refer to a prohibition of inheritance; so that no difficulty [arises] and no explanation [is needed]. But how can this explanation [of Vidyáraṇya] do in the face of the adverse text of sage Baudháyana? Granting that the word *indriya* does mean the *soma* juice in conformity with the context, yet inasmuch as there is an absence of another text declaring the incapacity [of females] to inherit, as it is not possible for the [present] Śruti to be unsupported, and as therefore the inference of [the existence of] a prohibition is necessary to justify the assertion of a fact, [viz., that females are deemed incompetent to inherit,] we should explain[2] [the present text] in the same way as [the Vedic text], 'therefore by the birth of a child without his knowledge, a man

[1] See Páṇini I. 2, 68.

[2] The meaning is that from the statement of a fact contained in the above Śruti we ought to infer a specific prohibition in regard to the capacity of females to inherit,

is degraded from his Bráhmanahood ?"[1] On failure of the father's mother, those who are of the same *gotra* and are *sapiṇḍas* such as the father's father and the like, are takers of wealth; the *sapiṇḍas* belonging to a different *gotra* being named by the term Bandhu. Among them, on failure of the father's issue, the father's mother, father's father, father's brothers and their sons are takers of wealth in order. On failure of the issue of the father's father, father's father's mother, father's father's father, father's father's brothers and their sons [inherit]. In this way, *sapiṇḍas* having the same *gotra* succeed to the wealth of a sonless male, up to [*i. e.* exclusive of] the seventh degree. On failure of *sapiṇḍas*, the *samánodakas* [inherit]. They are seven [degrees] beyond the sapiṇḍas, or as far as the birth and [family] name is known [to be the same]. For Manu says :—'The *sapiṇḍa* relationship ceases with the seventh [degree], and the *samánodaka* relation ceases with the fourteenth.' Some say [it extends] as far as the birth and [family] name is known [to be the same], the remaining [gentiles] are termed the *gotra*. 'That the words *Bandhu* and *Sakulya* in the text of Vishṇu [on this subject] stand for a *sapiṇḍa* and a *Sagotra* (one of the same gotra or family) [respectively] has already been stated. The *Samánodakas* too are takers of wealth in the order of their propinquity."

The Smṛiti Chandriká observes :—

सोदरसुताभावे सापत्नभ्रातृसुता धनभाजः तेषामप्यभावे के धनभाज इत्यपेक्षिते याज्ञवल्क्यः। गोत्रजा इति धनभाज इति शेषः। गोत्रजशब्दोऽत्र गोबलीवर्दन्यायात् पूर्वोक्तपितृभ्रातृतत्सुतव्यतिरिक्तपितामहसुतादिगोत्रजेषु वर्तते। तत्रापि सरूपैकशेषस्य स्वतोऽवगते पितामहदुहित्रादिस्त्रीव्यतिरिक्तेषु वर्तते। कारणान्तरादेव हि कुक्कुटौ वायसौ मिथुनं करिष्याम इत्येवमादौ विरूपैकशेषावगतिः। नचेह तथास्ति कारणान्तरं। प्रत्युत भ्रातृतत्सुतसाहचर्यात् पुमांस एव गोत्रजा गम्यन्ते किंच पत्नीदुहित्रादीनां शुक्रग्रहणेन दायादत्वस्मृतेरगन्या तस्मात् स्त्रियो निरिन्द्रिया अदायादा इति श्रुतेः तेनैव सरूपैकशेषतया स्मृतेः सत्यां गतौ श्रुतिविरोधिनी विरूपैकशेषता दूरोत्सारिता। अतएव जीवत्पुत्रेभ्यो दायं विभजेदित्यापस्तम्बसूत्रं व्याचक्षाणेन तद्भाष्यकारेण पुत्रेभ्य एव दायं विभजेत् न स्त्रीभ्यो दुहितृभ्यो इत्युक्तम् यद्यपि भ्रातृपुत्रौ स्वसृदुहितृभ्यामिति शब्दस्मृत्या पुत्रेभ्य इत्यत्र विरूपैकशेषं कृत्वा दुहितृणामनुप्रवेशोऽत्र कर्तुं शक्यते तथापि पुमांसो दायादा न स्त्रियस्तस्मात् स्त्रियो निरिन्द्रिया अदायादा इति श्रुतेरिति एतेनेदं निरस्तम्। यत् कैश्चिदुक्तं गोत्रजाः पितामही सपिण्डाः समानोदकाश्च तत्र पितामही प्रथमं धनभाक्। मातर्यपि च वृत्तायां पितुर्म्माता हरेद्धनमिति मातुरनन्तरं पितामह्या धनग्रहणे प्राप्ते पित्रादीनां भ्रातृसुतपर्यन्तानां बद्धक्रमत्वेन मध्येऽनुप्रवेशाभावात् उत्कर्षे तत्सुतानन्तरं पितामही गृह्यते अविरोधादिति। भ्रातृसन्तानानन्तरमपि तेषां गोत्रजानांच बद्धक्रमत्वाविशेषात् पितामह्या वा सहाव क्रमो निबध्यते इति सति सम्बद्धम्। सरूपैकशेषत्वेन पुंसामेव गोत्रजानां भ्रातृसुतसहक्रमबन्धनात्। न ह्यन्यगोत्रजा पितामही मृतगोत्रजापीत्यलं बहुना। स्मृतिचन्द्रिकाधृतम् [95]

[I have not translated this passage because the most important portion of it is already included in the extract from the Víramitrodaya.]

From the above authorities, it appears—first, that the Hindu law is opposed to the succession of females; and secondly, that exceptions have been made in the case of certain females, and that those who do so succeed are—

(1) The wife.

(2) The daughter.

although there is none such in so many words; just as we do in the case of the following text, when we deduce therefrom a commandment of the Veda for a married man to abstain from going abroad for any length of time.

[1] See Taittiríya Krishṇa Yajuh Samhitá vol. I p. 677 (Bib. Ind.)

(3) Mother.
(4) Paternal grandmother.
(5) Paternal great-grandmother.
(6) Paternal great-great-grandmother.
(7) Paternal great-great-great-grandmother.
(8) Paternal great-great-great-great-grandmother.

I may add that the above is drawn up in reference to the Mitákshará of Vijñáneśvara. Nílakaṇṭha in the Vyavahára Mayúkha adds the sister, while Kamalákará expressly disapproves the addition.

Of the above eight females, the wife, daughter, and mother come in virtue of the express texts of Yájñavalkya (ch. ii., v. 135)[1] and others. This observation is applicable to the whole of India: the difference in regard to the Gauḍa authors is only in the interpretation. After the mother, comes the paternal grandmother. She does so by a text of Manu.[2] This text is quoted and supported by the *Nibandhakáras* (treatise-writers) Aparárka, Vijñáneśvara, Jímútaváhana, Mitra Miśra, and others. The four remaining female *sapiṇḍas* are deduced from the above text of Manu by Vijñáneśvara.[3] His commentator Viśveśvara in his Subodhiní adopts this construction, and instead of stopping with the detailed enumeration ending with the *prapitámahí* completes the seven degrees as above detailed.[4]

The result of the whole foregoing discussion may be thus briefly summed up so far as the female *Sapiṇḍa* succession is concerned:—

I. That the Śruti as well as the Smṛiti law and its expositors are unfavourable to the succession of females in general;

II. That an exception is made in the case of certain females;

III. That the succession of those females whose right to succeed is so admitted, is itself subject to disabilities[5] from which the succession of all males is absolutely free;

---

[1] See above Part II., pp. 220, 221.

[2] Ch. ix. v. 217.

[3] See above page 360, where the whole passage is translated.

[4] See above page 361.

[5] Thus the widow must be chaste, or she cannot succeed, [see above Part II.] p. 77, lines 7—12, 29—32, p. 78, ll. 3—6, 31—34, p. 79, ll. 1—3, 9—12; Mitákshará (Colebrooke's Trans.) Stokes' H. L. Books pp. 428, 429; Mayne's Hindu Law and Usage p. 470, and note s; see 13 Bengal Law Reports p. 1 (*Kery Kolitany* v. *Moniram Kolita*); even after she has succeeded—she will be deprived of the property if she turns unchaste—(see Mayne, p. 471 and *notes*; Hárita quoted above at p. 288 from Pandit Jibánand's Edition of the Smṛitis; on the other hand, see the judgment of the majority of the judges in *Kery Kolatany* v. *Moniram Kolita*, 1 Beng. L. R. p. 1). If she adopts, she at once loses her title over her husband's property. See *Ráje Vyankatrav* v. *Jayavantrav*, IV. B. H. C. R. p. 191 A. C. J.; *Nathaji Krishnaji* v. *Hari Jagoji*, VIII. Bom. H. C. R. p. 67 A. C. J.: *Narsammal* v. *Balarámácharlu*

IV. That the above propositions are expressly laid down by Jímútaváhana in the Dáyabhága and by Devaṇṇabhaṭṭa, in the Smṛiti-Chandriká;

V. That Vijñáneśvara, though not as explicit as Jímútaváhana and Devaṇṇabhaṭṭa, is substantially in accord with his brother jurisprudents.

I have indicated above that no other female *sapiṇḍas* than the 8 above mentioned can inherit according to the text law. I now proceed to state the reasons why they are so disqualified in addition to those already advanced in the above general remarks. I naturally begin with the Śruti. The text तस्मात्स्त्रियो निरिन्द्रिया अदायादाः[1] (therefore females are feeble and unworthy of inheritance) which occurs in Taittiríya Yajurveda Samhitá, *káṇḍa* VI., *prapáṭhaka* V., and *anuváka* VIII., incapacitates females from inheritance generally. The translation of this text suggested on the authority of Vidyáraṇya by Messrs. West and Bühler at page 178 note *a* (2nd edition) is opposed to Vidyáraṇya's own explanation of the self-same text in other places, and also to the interpretation placed

---

I. Mad. H. C. R. p. 420. *Kooer Goolubsing* v. *Rao Kurum Sing*, 14 Moore E. I. Ap., see p. 186. If she remarries, she forfeits the estate, (I. Strange's Hindu Law p. 242; *Hurkoonwar* v. *Ruttonbaee* I. Bor. p. 431; *Teekumjee* v. *Mt. Laroo* II. Bor. 361; *Murugayee* v. *Viramakaly*, I. Mad. L. R. 226).

As a daughter, her succession is full of impediments. The unmarried take before the married (see above Part II., pp. 79, 220; *Bakhubai* v. *Manchábai*, 2 Bombay H. C. R. p. 5). Again the *sadhana* (or endowed) have to give way to the unendowed (see above Part II., pp. 79, 220; 2 Bombay H. C. R. p. 5). In Bengal, the sonless are excluded by those having sons (see above Part II., page 220, lines 48—50; Mayne, cases in note *z* at p. 476. Unchastity excludes her from taking the estate, see Mayne, pp. 471, 475 note *r*; 2 Macnaughten H. L. p. 133, Question 2; *Mussamut Gungajuti* v. *Ghasita*, Indian L. R. 1 Allahabad 46). But in *Advyappa* v. *Rudrewa*, Printed Judgment for 1879, Bombay, p. 516, the contrary has been held.

In *Navalram* v. *Nandkisor*, Bombay H. C. R. vol. I., p. 209, the daughter's estate is held to be unlimited; on the other hand, in *Mussapunt Gyan Koowar and others* v. *Dhookurn and others*, 4 Calcutta G. D. A. R. p. 420 (2nd edition), *Chotay Lal* v. *Chunnoo Lall*, 22 Calcutta W. R. (C. R.) 496, 2 Macnaughten H. L., case 16, p. 224; *Sengamalathammal* v. *Valaynda Mudali*, 3 Madras H. C. R. p. 312, *Strimuttu Mustu Vizia Raghunada Rani and others* v. *Dora Sing Tevar*, 6 Madras H. C. R. 310, and 2 Macnaughten H. L. 57, the daughter's interest under the same law is held to be limited for life; so also by the Privy Council in *Chotay Lall* v. *Chunno Lall and others*, VI. Law Reports, Indian Appeals p. 15.

The mother taking as her son's heir takes only like a widow, I Bombay H. C. R. 117, 1864, *Vinayak Anandrao* v. *Laxmibai*, 6 Bombay H. C. R. (A. C. J.) 215, *Narsappa* v. *Sakharam*; *P. Bachirajee* v. *V. Venkatappadu*, 2 Madras H. C. R. 402 (even if she succeeds to a daughter, the result seems to be the same); *Laxmibai* v. *Ganpat Moroba*, Bombay H. C. R. (O. C. J.) 128. The other five ascendants, taking under the same texts, can have no higher title.

[1] See above page 358.

thereon by earlier sages such as Baudháyana (see above p. 358) and commentators of acknowledged learning and acumen such as Haradattáchárya (see above p. 358), Devaṇṇabhaṭṭa,[1] Apararka,[2] and Mitra Miśra.[3] Thus Vidyáraṇya himself in his comments on the 27th *Anuváka* of *Prapáṭhaka* IV. of *káṇḍa* I. of the Taittírya Yajush Samhitá, (see vol. I. p. 667 Cal. ed). explains this verse in the manner I have done. His (Vidyáraṇya's) explanation runs thus :—तस्माल्लोके स्त्रियः सामार्थ्यरहिता अपत्येषु दायभाजो न भवन्ति. Translation :—'Therefore in this world females being feeble, do not become the takers of *dáya* (heritage) from their issue.'

Yáska, the author of the Nirukta, supplies evidence of early tradition being opposed to female succession ; for in commenting on the Vedic text—अविशेषेण पुत्राणां दायो भवति धर्मतः। (Inheritance properly belongs to sons without distinction), he says न दुहितर इत्येके तस्मात्पुमान्दायादो ऽदायादास्त्रीति विज्ञायते. Translation :—Some [hold that] daughters [do] not [inherit]. Therefore it is known that a male is the taker of wealth, and that a female is not a taker of wealth (see Prof. Roth's edition of Yáska, p. 53).

Manu as edited with Kullúka's commentary contains a verse which is unmistakeably based on the above Śruti text (see ch. ix., v. 18).[4] I think that the reading[5] of Kullúka is clearly wrong, and that of Háradatta and Mitra Miśra is correct. First, because in Kullúka's reading there is an unmeaning repetition of the expression *amantráh*, when the idea has been already fully exhausted in the preceding half of the verse by the *násti striṇám kriyá mantraih* ; secondly, because the words *tathá cha Śrutayo bahvyoh* (likewise several Śruti texts) with which the next verse begins indicate that it was preceded by a verse containing some Śruti texts ; and thirdly, the use of the word *niriṇdriyáh* in a Vedic sense in a classical work points to that word being naturally followed by another Śruti word *adáyádáh*. For there is no other word in the Black Yajurveda following *nirindriyáh* except *adáyádáh* ; and lastly, because this reading has been accepted by an acknowledged

[1] Smṛiti Chandriká, Cal. ed. pp. 21, 64, 75.

[2] Vyavahárádhyáya, leaf 42 page 2 line 16, and l. 46 p. 2 l. 15.

[3] Vír. l. 208, p. 2.

[4] Reading as given by Kullúka :—

"नास्ति स्त्रीणां क्रिया मंत्रैरिति धर्मो व्यवस्थितः ॥
निरिन्द्रिया ह्यमंत्राश्च स्त्रियोनृतमिति स्थितिः ॥"

Reading of the second half as given by Haradattáchárya (see Ápastamba Dharmasutra, Part II., II. 6, 14 page 82) :—

निरिन्द्रिया अदायादाः स्त्रियो नित्यमिति श्रुतिः ॥

In the Mitákshará on Gautama Smṛiti (MS. leaf 80, p. 2, line 11) the same reading is given by Haradattáchárya.

[5] Reading of the same half by Mitra Miśra in the Víramitrodaya (leaf 220, p. 1 line 2) :—

अनिन्द्रिया ह्यदायाश्च स्त्रियोनृतमिति स्थितिरिति तन्मूलकमनुवचनाच्च ॥

authority like Haradattáchárya in two distinct works,[1] and an able commentator like Mitra Miśra. Ápastamba and Baudháyana are against the capacity of females to inherit (see above p. 358) generally. If Kullúka had obtained the same reading, he too would have supported the Śruti, as he holds anti-vedic interpreters heretical (chap. ii., vv. 7—15).

The next step in the enquiry is to find out how Vijñáneśvara has interpreted Yájñavalkya on this point. Further, has he in interpreting Yájñavalkya held Ápastamba, Baudháyana and others to be binding as lawgivers; and if he has, in what manner has he removed their objections to female succession? Vijñáneśvara's mode of settling the order of succession shows unmistakably that he has settled his schemes on the same principle as the above writers, and with the above texts before him, and in accordance with those texts. Thus he takes the widow and daughter and mother as expressly mentioned by Yájñavalkya, and the daughter's son by the indication of *cha* in the Smṛiti. In like manner, when "the fixed order," as he calls it, is over, he places the *pitámahí*; for, as he says, she is

[1] Háradatta is the author of a commentary on the Ápastamba Dharmasútra named Ujjvalá, and on the Gautama Dharmaśástra named Mitákshará. He is a very old and standard writer on Dharmaśástra, and not a recent one as said by Dr. Bühler, who remarks:—"His date may be inferred from the fact that the oldest writer on law quoting his opinions is Mitrá Miśra, the author of the Víramitrodaya, &c." (See Prof. M. Müller's Sacred Books of the East, vol. II., p. xliii, Introduction.) This is not correct, for Háradatta is, so far as my present researches go, quoted by Mádhava in the Sarvadarśana Sangraha in his account of the Nákula Páśupata Darśana (Sarvadarsana Sangraha, p. 74 line 17, Calcutta edition, 1858; see an English translation of that passage in the Pandit Benares, vol. X. page 286). The date assigned by Dr. Burnell to Mádhava is the latter part of the 14th century. (See "Introduction to the Translation of the Dáyabhága portion of Vyavahára Mádhava p. x. by Dr. A. C. Burnell.) Bhaṭṭoji Dikshit in his commentary on *Chaturvinśati Smṛiti* refers more than once to Haradattáchárya (M. S. Elphinstone College Copy: leaf 6, p. 2, l. 35, p. 1 line 10). I have had the references verified by comparing the passages with Háradatta's Commentary on Gautama named Mitákshará; it is also clear that this Háradatta is different from Háradatta Misra, the author of the Padamañjari. For the one is known by the epithet Áchárya, and the other by that of Misra. Náráyaṇabhaṭṭa in his Pryogaratna, while treating the subject of *Pindapitṛiyajña*, cites Háradatta's commentary on the Ápastamba Sútra (see leaf 93, p. 2, line 3). Náráyaṇabhaṭṭa, as we know, lived at the end of the sixteenth and the beginning of seventeenth century of Samvat era (see Part I. pp. 4, 5 Preface). He is also quoted in the Maheśabhaṭṭí (l. 1, p. 2). This shows the standing of Háradatta, and this accounts for his being quoted as a decisive authority by Mitra Miśra, for it is clear to me that a long series of writers from Ápastamba, and Baudháyana, downwards, had been interpreting the abovementioned Śruti passage in a uniform manner; and a series of commentators of established repute have done the same, the last being Mitra Miśra, who is not the first to quote Háradatta, as has been asserted (Sacred Books of the East, vol. II. p. xlii, Introd.), nor could he have been quoting from mere memory, and therefore commiting a mistake of interpreting Manu, as the whole passage shows. (1 West and Bühler's Digest, Part II. p. 100 note.)

mentioned by Manu, who puts her after the mother; but as the order of succession up to the brother's sons is, according to his view of Yájñavalkya, fixed, she cannot get in there, and he therefore complies with the spirit of both Manu and Yájñavalkya by placing her *after* the brothers' sons, and *before* the *gotraja sapiṇḍas*; and he derives her *adhikára* (right) from Manu ch. ix. v. 217, and not from Manu ch. ix. v. 187, where the *sapiṇḍas* are mentioned.

He then takes the *prapitámahí* as one of the same class, namely, the direct ascending *sapiṇḍas* among females, but in naming the *sapiṇḍas* after the *pitámahí* (father's mother), he fixes them thus[1]—

*Pitámahí* (father's mother).
*Pitámaha* (father's father).
*Pitámaha's* (his) sons.
*Pitámaha's* (his) son's sons.

Thus he leaves out the wives of the father's brothers and of their sons. Then comes the

*Prapitamáhi* (the father's father's mother).
*Prapitámaha* (father's father's father).
*Prapitamáha's* sons.
*Prapitamáha's* grandsons.

In this case also, the wives of the sons and grandsons of *Prapitámaha* (father's father's father) are excluded, on the same principle as I take it, namely, that they, like the two females in the next preceding class, are merely of an inferior class of *sapiṇḍas*, whereas the *pitámahí* and *prapitámahí* and the wives of the remaining four ascendants are *sapiṇḍas* of the same class as the mother. The blood of these six female ancestors enters into the *piṇḍa* (body) of the deceased (propositus). Therefore they take his *dáya*. The wives of the collaterals are *sapiṇḍas* only in an inferior sense. Hence Viśveśvara in working out Vijñáneśvara's order up to the seventh degree, excludes the wives of the collaterals, and only includes the remaining four ascending female *sapiṇḍas*.

That Vijñáneśvara was anxious to include females wherever he could do so consistently with Vedic and Smṛití texts is clear from his strong remarks in the cases of the wife, the daughter, and the mother. Whenever he could take advantage of some accepted rule of criticism to avoid the disabilities created by Vedic or other texts, he has tried his best. His deliberate exclusion of the wives of two male sapiṇḍas up to the *Prapitámahí* (father's father's mother) and of two more after her, is, I think, strong evidence of his views in regard to the determination of the order of *sapiṇḍas* in the very same series.

[1] Samskárakaustuba, leaf 173, p. 1, line 9.

Of those who have interpreted Vijñaneśvara, Viśveśvara, both in the Subodhiní and in the Madanapárijáta, distinctly excludes the wives of the collaterals,[1] and only includes the six lineal female ancestors of the deceased.[2] His treatise entitled Madanapárijáta, as he says in the preface, is expressly based on Hemádri, Kalpadruma, Aparárka, Smriyartha Sára, Smriti Chandriká, Mitákshará, &c. and it may therefore be fairly taken that his eighth chapter on Dáya expresses the sense of all the above. His conclusions have been summarised before.[3] Mitra Miśra in the Víramitrodaya explains[4] Vijñáneśvra in the way I have done above. The other Nibandhakáras (digest-writers) both among the Drávidas and the Gaudas also hold the wives of the collateral *sapiṇḍas* to be excluded.

Bálambhaṭṭa alone includes two more females, namely, the sister and the daughter-in-law. His reasoning is defective. If new reasons had to be given for the first time, one or two Śruti texts[5] may be cited to support the inclusion of the above two, but that would be making new law, and would be open to the charge of symbolical reasoning, which has been so often condemned. As regards the others, namely, the wives of the collaterals, he says nothing explicit.

Śulapáṇí seems to follow Aparárka; but he is very brief. In speaking about the daughter, however, he distinctly qualifies her succession by the epithet *sádhvi* (chaste) on the authority of Bṛihaspati.[6]

Besides the above evidence, of the distinct exclusion of the wives of collaterals, another piece of evidence is that in classifying the *gotrajas* according to Yájñavalkya II., 135, Vijñáneśvara divides them into three distinct classes[7]:—

I. Pitámahí,
II. Sapiṇḍáh.
III. Samánodakáh.

He here brings in the Prapitámahí, and Viśveśvara follows him, and brings in the four other lineal ancestors, indicated evidently by the

[1] See the list at page 361.

[2] Preface, verse 22:— हेमाद्रिकल्पद्रुमसापरार्कस्मृत्यर्थसारस्मृतिचन्द्रिका च ॥ मिताक्षरादीनवलोक्य यत्नान्निबध्यते संग्रहतो निबन्धः ॥ MS.

[3] See above p. 361.

[4] See above pp. 361, 362. Samacharan Sircar's Vyavasthá Chindrika vol. I (Sanskrit) p. 56, lines 7 and 8, and page 230.

[5] आत्मा वै पुत्रनामासीत् ॥ Manu Smriti Commentary, l. 154, p. 2.
अथो अर्धो वा एष आत्मनः। यत्पत्नी ॥ Taittiríya Brámaṇa, 3rd *Káṇḍa*, 3rd *prapáthaka* 5th Anuváka, (Col. Ed. 3rd vol. p. 59).

[6] The verse runs thus:—सदृशी सदृशेनोढा साध्वी शुश्रूषणे रता। कृताकृता वा पुत्रस्य पितुर्धनहरी तु सा ॥ Translation:—That [daughter] is taker of the wealth of her sonless father who is [of an] equal [caste], and who has been married by one equal [in caste], whether she be appointed or not appointed.

[7] See page 360 above, where the passage is translated.

analogy of the *Pitámahí*. For he does not include her among those whom he classes as *Sapiṇḍas*, and who, if the word *Sapiṇḍa* be more literally taken, is, as a fact, a *sapiṇḍa* in a sense entirely different from what the wives of the collaterals are.

The next step is to see whether Vijñáneśvara in interpreting Yájñavalkya holds the Vedas, Ápastamba, Baudháyana, and other authorities binding. On this point there is ample evidence, and in the affrmative. Yájñavalkya himself names (ch. i., 4) Ápastamba among 20 Smṛiti lawmakers, and Baudháyana is also expressly included by Vijñáneśvara as an authority. Yájñavalkya also expressly mentions the Vedas, (which like all Áryan law-makers he was bound to do,) the Puránas, &c., in verse 3, and in verses 4 and 5 names 20 out of the Smṛiti-makers. Vijñaneśvara takes this enumeration as illustrative, not exhaustive. Thus in his comments on the above verses (4 and 5) he says:—नेयं परिसङ्ख्या किंतु प्रदर्शनार्थमेतत् । अतो बौधायनादेरपि धर्मज्ञास्त्रप्रणेतृत्वमविरुद्धम् । एतेषां प्रत्येकं प्रामाण्येऽपि साकाङ्क्षाणामाकाङ्क्षापरिपूरणमन्यतः क्रियते । विरोधे तु विकल्पः

Translation:—This enumeration is not exhaustive but illustrative. Therefore [the character] of Baudháyana and the like as writers of *dharmaśástra* is indisputable. Although each of these [writers] is an authority, yet wherever a deficiency is observed [in one writer], it is supplied from other [writers]. Where there is contradiction [between two texts, both] optionally [prevail].

Again, the authority of Śruti as against Smṛiti texts is admitted throughout Áryan law, except where that has been modified by usage. Vijñáneśvara in his comments on Yájñavalkya I. 7, clearly lays this down. (See Mit. chap. i. l. 2 p. 1.) He also quotes Manu, chap. ii. v. 10 as authority. A reference to Manu chap. ii. vv. 7—11, shows that any commentator, interpreting the law in a manner so as to question the authority of the Vedas, was considered an atheist like a Chárváka. Manu, II., 12, is essentially the same in its signification as Yájnavalkya, I., 7.[1] So that Vijñáneśvara in expounding the *Dharma* and in placing the Śruti, the Smṛiti, and other sources of the Dharma, in the order in which they were to be held binding, clearly indicates his own rules of interpretation. He must therefore be taken to have held both the Śruti and Smṛiti binding. Such being the case, the next question which fairly arises is—supposing there are two interpretations of Vijñáneśvara possible—one in consonance withthe Śruti and with Ápastamba and Baudháyana and their commentators, and another opposed to them, which should be accepted. The answer according to the Dharmaśástra rules—

[1] I place the two verses side by side:—

| *Manu II.* 12. | *Yájñavalkya I.* 7. |
|---|---|
| वेदः स्मृतिःसदाचारःस्वस्य च प्रियमात्मनः ॥ | श्रुतिः स्मृतिः सदाचारः स्वस्य च प्रियमात्मनः ॥ |
| एतच्चतुर्विधं प्राहुः साक्षाद्धर्मस्य लक्षणम् ॥ १२ ॥ | सम्यक् संकल्पजः कामो धर्ममूलमिदं स्मृतम् ॥ ७॥ |

if I might not also say according to all systems of reasoning—must be in favor of the former. And this conclusion is also strengthened by the circumstance that Vijñáneśvara's own expositors, with the exception of Bálambhaṭṭa, have also understood him in the first sense, and not in the second.

Messrs. West and Bühler's Digest lays down the following rule, and refers to the examples from which the deduction is made.

(14) Gotraja Sapiṇḍas.—On failure of the paternal grandmother, the Gotraja Sapiṇḍas, *i.e.* all the males of the deceased's family (gotra), related to him within six degrees, downwards and upwards, together with their respective wives, are entitled to inherit the estate of a separate householder. It would seem that the Gotraja Sapiṇḍas inherit according to the nearness of their line to the deceased, *i.e.* that the fourth, fifth, and sixth descendants in the deceased's own line (Sâmtâna) should be placed first, next the father's line, viz., the deceased's brother's second, third, fourth, fifth, and sixth descendants, next the grandfather and his descendants to the sixth degree, and so on. In Guzerat the sister is placed at the head of the Gotraja Sapiṇḍas.[1]

*Examples.*

Digest, chapter ii. sec. 14, I. (pp. 149—174).

The cases[2] from which the deductions are drawn may be roughly classed as follows :—

| | | No. of cases. |
|---|---|---|
| I. | Full sisters | 7 |
| II. | Half sister | 1 |
| III. | Paternal uncle | 2 |
| IV. | Father's brother's son | 10 |
| V. | Paternal grandfather's brother's son | 2 |
| VI. | Brother's grandson | 2 |
| VII. | Paternal uncle's grandson | 1 |
| VIII. | Daughter-in-law | 1 |
| IX. | Brother's wife | 3 |
| X. | Paternal uncle's widow | 3 |
| XI. | Paternal uncle's son's wife | 1 |
| XII. | Widow of a gentile within the fourth degree | 1 |
| | Total... | 34 |

[1] Hindu Law : Inheritance : Introduction p. lii (1st ed.)

[2] The following epitome of the several cases will explain how far they bear on the succession of the wives of *Gotraja Sapiṇḍas* :—

Full sister : 7 cases :—

(1). (A) *Full sister* v. (B) *Brother's widow.* [Surat case.] (A) succeeds under the Mayúkha texts quoted.

(2). (A) *Sister's daughter's son* v. (B) *Sister and sister's-daughter, the latter being mother of that son* : (B) succeeds. [Ahmedabad case.] The answer is unmeaning. The son could only derive his right through his own mother, and this is not a question of male and female *sapiṇḍas.*

Out of the 34 cases, 9 are directly connected with the present question.

(3). (A) *Daughter* v. (B) *Daughter's son.* [Surat case.] [This should have been placed in ch. ii. sec. 7 to which it belongs, because there is no competition between *Gotraja sapiṇḍas*, and the Mitákshará authority[1] quoted does not apply to this section at all.]

(4). (A) *Sister* v. (B) *The son of the same sister.* [Ahmedabad case.] (A) succeeds. The Śástri's answer has nothing to do with the question. According to the *Mayúkha* the sister comes in as a *Gotraja*; but the sister's son can only come in, if at all, as a *Bandhu* under the Mitákshará.

(5). (A) *Sister* v. (B) *The son of the same sister.* [Ahmednagar case.] (A) succeeds. So many passages are indicated that evidently the Śástri has not even understood the question, see also remarks on the preceding case No. 4.

(6). (A) *Sister* v. (B) *Her own two sons.* As in No. 5, "No authority quoted." See my remarks on the two preceding cases Nos. 4 and 5. [Ahmednagar case.]

(7). (A) *Widowed mother who had remarried* v. (B) *The sister of the deceased.* (B) succeeds. "Authority not quoted." This is the remark of the learned editors. But I would add that the question contains no proper statement of facts, and the answers give no reasons. [Sholapur case.]

I. A. 2. Half-sisters: one case. [District not stated.]

(A) *Step-sister* v. (B) *Step-mother.* (A) succeeds. Nirṇayasindhu is quoted, but does not support the answer in favor of the sister.

---

I. A. 3:—The paternal uncle: 2 cases.

(1). (A) *The paternal uncle* v. (B) *His own wife.* (B) held not entitled to a certificate. [Poona case.] The question is wrong, and so is the answer. Whether a certificate to administer to a nephew's estate may be granted to the aunt in the absence of her husband in a foreign country, is here a matter of discretion. There is no competition of interests. The status of the family is not stated; and the authorities are vague.

(2). (A) *The paternal uncle* v. (B) *The pát wife of the deceased's father.* [Dharwar case.] "Authority not stated." The answer that (A) is heir and the *pát* wife only entitled to maintenance shows that the latter, although a *gotraja*, was not considered an heir.

I. A. 4:—Father's brother's son: ten cases. [Ahmednagar case.]

(1). (A) *A separated cousin* v. (B) *An illegitimate son,* the deceased being a Brahman. [An Ahmednagar case.] (A) succeeds. There is no competition here between male and female, nor between two heirs. One is an heir and the other only entitled to maintenance.

(2). (A) *Father's brother's son* v. (B) *Sister's son.* The deceased was a Śúdra. [A Tannah case.] (B) succeeds, according to the Śástri's answer. But the learned authors of the Digest add a note that "the father's brother's son inherits, since he is a *Gotraja Sapiṇḍa*, while the sister son is only a *Sapiṇḍa*:" so there is no competition between *Gotraja Sapiṇḍas.*

(3). (A) *Two separated cousins* v. (B) *Widow of a separtaed cousin.* [A Dharwar case.] (A) succeeds. The Śástri's answer shows that the cousin's widow was held not to be entitled to inherit as a *gotraja sapiṇḍa*, unless she had a son. [This case therefore is adverse to the proposition advanced.]

(4). (A) *Cousins* v. (B) *Sons of maternal uncles.* [A Broach case.] (B) are *gotrajas* and succeed, while (B) their opponents are *Bandhus*; so that there is no competition between *gotrajas*, or between male and female *gotraja sapiṇḍas.*

[1] Mit. ch. ii., l. 59, p. 2.—मातुर्दुहितरः शेषं ॥

There seems however to be no competition between males and females.

(5). (A) *Cousin* v. (B) *Second cousin's son.* [A Sholapur case.] The answer is both (A) and (B) succeed. This has been rightly condemned, for the cousin (see table at p. 378) is a nearer *sapiṇḍa*, while his opponent belongs to the class of remoter *sapiṇḍas*.

(6). (A) *Two separated cousins* v. (B) *A sister's daughter* and (C) *A separated cousin's son.* [A Surat case.] Here the sister's daughter is held not to be an heir, and rightly so: for the rest, see my remarks on the preceding case (5).

(7). (A) *Cousins* v. (B) *Cousin's sons.* [A Khandesh case.] (A) succeed. The question ought to have stated whether the family was joint or divided; for the answer will be wrong in the case of an undivided family. But this as well as Nos. 5 and 6 are not illustrations of male *v.* female *sapiṇḍas*.

(8). (A) *A separated cousin* v. (B) *Daughter's daughter* and (C) *Some second cousins.* [A Tannah case]. (A) succeeds. Daughter's daughter is not an heir to a deceased male; but the question is inaccurate in not stating whether the second cousins were separated or joint. If they were joint, then the answer is incorrect; for they would exclude the separated cousin though nearer.

(9). (A) *Four cousins* v. (B) *Sister's son,* (C) *Two widowed sisters-in-law* and (D) *Three father's cousins.* [An Ahmedabad case.] (A) succeed.

The Śástri's reply is valuable, as showing the distinction between the two classes of female *sapiṇḍas*—*Mukhya* (principal) and *gauṇa* (secondary). He rejects sisters-in-law as not being a *Mukhya Sapiṇḍa*, and therefore not an heir. The Digest-writers condemn the opinion in respect to the gift to the sister's son, and cite authorities. Those very authorities show that the Śástri's reply would be right if the cousins were joint with the deceased. The question does not state their status.

The English translation (p. 163, 1st ed.) is imperfect: see the Maráthí work, p. 145, from which the English version must have been made. As to the remark of the learned authors of the Digest at page 165, the fault is due to the loose translation, rather than to the answer which, when closely translated, runs thus: "to the sisters-in-law, the *mukhya* (principal) *sapiṇḍa* relationship does not come, but the *gauṇa* (secondary) *sapiṇḍa* relationship comes: therefore the sisters-in-law are not heirs." See Mr. Justice West's remarks at page 442 of Indian L. R. Bombay series vol. II., which are based on the inaccurate English translation.

(10). (A) *A cousin* v. (B) *A manager for the deceased adopted son,* appointed by his uncle's widow deceased. [A Poona case.]

This is not a case of succession. A *Dharmádaya* gift by a widow is confirmed.

I. A. 5:—Paternal grandfather's brother's son: two cases.

(1). (A) *Granduncle's son* v. (B) *Full sister's daughter.* [A Surat case.] (A) succeeds. A sister's daughter is no heir at all; and here there is no competition between rival *Gotrajas*.

(2). (A) *Granduncle's son* v. (B) *Son of father's sister.* [A Broach case.] The latter is a *Bandhu* and the former is a *gotraja sapiṇḍa*; so there can be no dispute about priority, and there are no rival *Sapiṇḍas*.

I. B. *a.* 1. Brother's grandson: two cases.

(1) (A) *Son of first cousin* v. (B) *Sons of first cousins.* [A Dharwar case.] The question is indefinite; for it contains no materials for a distinction, all the claimants being of equal affinity. The Śástri has rightly given a hypothetical answer dependent on the united or divided status of the parties.

Again, this case ought to have no place under the present heading of 'brother's grandson.' It has been omitted in the Maráthí edition, see p. 149.

(2). (A) *A brother's grandson* v. (B) *A daughter's grandson.* [An Ahmednagar case.] (A) succeeds. A daughter's grandson is no heir to a male; there is no competition of heirs here.

The status of the parties is not described. Besides the cases mentioned by Mr. Mayne (p. 451 note *b*) there are others in which the

I. B. *a*. 2.—Paternal uncle's grandson: one case.

(1). (A) *Paternal uncle's grandson* v. [B] *A sister* [the opponent appears to be a sister from the reply, but it is not stated in the question]. [A Dharwar case.] (A) succeeds.

This reply shows that the Śâstri did not consider the sister as a *Sapiṇḍa*; for if he had, then indisputably the sister would have excluded the first cousin's son as being nearer according to some writers.

I. B. *b*. 1. Daughter-in-law.

(1). (A) *Daughter-in-law* v. *None*. [A Surat case.]

The question distinctly states that there is no male relation of the deceased.

The reply in the English and Maráthí versions does not correspond (see I. W. & B. p. 169 1st Ed. and the Maráthí version p. 151).

The second authority quoted by the Śâstri shows that he based the succession on the capacity to offer *Piṇḍas*, and that because the list of persons entitled to perform a *Śrâddha* contains the daughter-in-law, she is an heir. For this Presidency, the Śâstri may perhaps be pronounced to have been on the wrong track.

In their 2nd edition the Digest-writers add in remark 3 (p. 196) the case of Baee Jetha *v*. Haribhai, S. A. No. 304 of 1871, Bom. H. C. P. J. F. for 1872, decided on 8th March 1872. That case however is one of the daughter-in-law of a *Watandár* as against a distant cousin born in a branch of the family which had no connection with the watan. A *Watan* being burdened with service to the State, succession to it is jealously watched by the State, and confined to the particular branch wherein the *Watan* has continued through generations. It was held by the learned judges in the above case that females were not ineligible for succession to a *Watan* (see Act XI. of 1843, sec. 13); and that it was always confined to that branch alone. As there was none in that branch who could exclude her, that finding was enough for the purposes of that case; so that the observations of the learned judges in regard to the order of succession among the claimants seem to be an *obiter dictum*.

I. B. *b*. 2.—Brother's wife; three cases.

(1). (A) *Sister-in-law* v. (B) *Sister's son*. [A Tannah case]. (A) succeeds. The report is very brief. This is not a case of competition between two *gotrajas*. The status of the family is not stated.

(2). (A) *Separated sister-in-law* v. (B) *Separated male cousin*. [A Khandesh case.] (A) succeeds.

The question is vague. The Digest-writers in Remark 2 say that if the male cousin be the brother's son, then the Śâstri's reply is erroneous. This is confirmed by them by adding another paragraph in their 2nd edition (see p. 197). This remark has been omitted in the translation (see p. 152) and the translator renders 'male cousin' by चुलतभाऊ (paternal uncle's son) so as to exclude the brother's son. If the remark of the Digest-writers is based on a reference to the original case in which this Vyavasthá was obtained, then the Śâstri's notions in regard to Manu IX. 187 seem to be unsound, for he would apply that text even in reference to persons mentioned in the Yájñavalkya's text ch. ii. 135, whose order Vijñáneśvara will not allow to be interfered with.

(3). (A) *Sister-in-law* v. (B) *Distant member of the family four or five times removed*. [A Surat case.] (A) succeeds.

The Śâstri seems to have been influenced by the circumstance of the family having been joint, and the distant male being separate. If that should be so, I am not sure that he may not be right. The authority he cites is Yáj. II. 135, which would appear not to be applicable to the case.

I. B. *b*. 3.—Paternal uncle's widow: three cases.

(1). *Aunt* v. *Sister*. [A Ratnágiri case.]

doctrine opposed to that in the digest seems to have been held.[1] Again, it seems that two kinds of texts have been held to be applicable to the same property at different times: sometimes as if the property were undivided, and again as if it were divided.[2] This seems to have partly affected the opinions of the Śástris above noted upon.

The learned editors observe[3] in reference to the Śástri's opinions generally:—"It is however sometimes impossible to bring the authorities which they quote into harmony with their answers." Mr. Mayne quoting the above remark adds:—"It may be added that it is equally difficult to bring their answers into harmony with each other. I have given up in despair the attempt to reconcile the fictions and rulings from Bombay, already cited in this paragraph, with those which will be found below."[4] It is a pity that all the Śástri's opinions were not published in original; and those published have been partly published, passages considered irrelevant by the editors being left out.[5] The

---

The statement in the reply about the rule of the Mayúkha is incorrect (see above Part II. p. 81, l. 25). The bearing of the authorities is not clear. The question is silent both in respect to the status of the family and as to how the dumb son came to succeed.

(2). (A) *Paternal uncle's widow* v. (B) *Maternal uncle.* [An Ahmednagar case.] (A) succeeds. No authority is quoted. The question ought to have stated whether the claimants were joint or divided with the deceased. There is no competition between two classes of *sapiṇḍas.*

(3). (A) *Paternal uncle's widow* v. (B) *Father's second cousin.* [A Tannah case.] (A) succeeds. It is not stated in the question whether the family was joint or divided. The reply does not state whether the paternal uncle was at the time of his death joint or divided with the deceased.

I. B. *b.* 4 Paternal uncle's son's wife: one case.

(1). (A) *The cousin's wife* v. *Daughter-in-law.*

The reply is unsatisfactory. The cousin's wife and the daughter-in-law being on a level in the Hindu scheme of succession, if inheritance was to be permitted to female *gotrajas*, the daughter-in-law must be nearer than the cousin's widow. There is here no competition with a male.

I. B. *b.* 5. The widow of a gentile within the fourth degree: one case.

(A) *The widow of the distant cousin* v. *Nobody.* [Surat case.]

The question is indefinite and the answer vague. The status of the family is not stated.

[1] *Pranshanker and another* v. *Prankuvar* (1 Borrodaile 427); W. & B. p. 159, 1st Ed. p. 3; Id. p. 163, 1st Ed. p. 9.

[2] *Manbaee* v. *Krishnee Baee*, 2 Borr. p. 127; *Jethee and others* v. *Sheor Baee*, 2 Borr. 588; *Roopchund* v. *Phoolchund*, 2 Borr. 616; *Bai Amrit* v. *Bai Manik*, 12 Bombay H.C. R. p. 79.

[3] W. and B., 1st Ed. p. 148.

[4] Mayne's Hindu Law and Usage, p. 451, and note (*b*).

[5] W. and B. Preface, pp. x—xii.

authorities marked by an asterisk have been added by the Editors.[1]

The observations of the Privy Council have evidently not been properly attended to by those who set the questions and those who answered them.[2] Seeing that the English translations are not always quite accurate,[3] the publication of the original would have been desirable.

Sir T. Strange, after discussing the question of the widow's right to succeed, comes to the conclusion that, subject to the condition of chastity, her right is admitted.[4] But after stating that the daughter is admitted to succession by an express text, he notes[5]—"the general principle being that the sex is incompetent to inherit."

Mr. W. H. Macnaughten also notes the *gotraja* heirs as given in my table up to No. 30 ; and then says : "In default of all these, the Sapiṇḍas in the same order as far as the seventh in degree, which includes only one grade higher in the order of ascent than the heirs above enumerated. In default of Sapiṇḍas, the Samanodakas succeed; and these include the above enumerated heirs in the same order as far as the fourteenth in degree."[6]

So far in regard to the female *Gotraja Sapiṇḍas* who inherit, and also about the exclusion of the rest.

Next I will state, as I promised to do before,[7] the order in which the male *Gotraja Sapiṇḍas* inherit; for their number has been already mentioned. The annexed table contains all the *Gotraja Sapiṇḍas* entitled to inherit; and the numbers indicate the order in which they inherit relatively amongst themselves, 1 (son), 2 (grandson), 3 (great grandson), are put in to complete the table. It is only in their absence

[1] Preface, p. xii.

[2] *Myna Bayee* v. *Ootaram*, 8 Moore's E. I. Appeals, p. 422 :—

"Every such reference in a suit, where it may bind a right, should embrace all important facts proved or admitted in the cause, which may affect the conclusion, and it is the duty of the court itself so to frame the questions that they may elicit an opinion upon the very facts on which the legal title depends. If the facts be not ascertained, but stated, and disputed, then the questions should embrace either view of the facts. When the opinion given is apparently irreconcilable with the opinions of proved text-writers, those who give the opinion should be asked further to explain that which appears *primâ facie* thus irreconcilable, so that they may show on what they ground an apparent exception from the general law, whether on general custom, modifying texts, on local usage, family customs, or other exceptionable matter."

[3] Compare pp. 163 (Q. 9), 238 (Q. 4), 239 (Q.) and 241, with the Maráthí Vyavasthas at pp. 145, 213, 214 and 215. (See preface to the Maráthí Digest, p. 5.)

[4] 1 Sir T. Strange's H. L. p. 136.

[5] Id. 146 : see vol. II., pp. 239, 243.

[6] Vol. I., p. 33 ; Calcutta, 1829.

[7] Page 357.

that this table can come into use. 5 (daughter) and 6 (daughter's son) are inserted in order that no heir taking under an obstructed succession may be left out. But 5 and 6 are not *Gotraja Sapiṇḍas.*

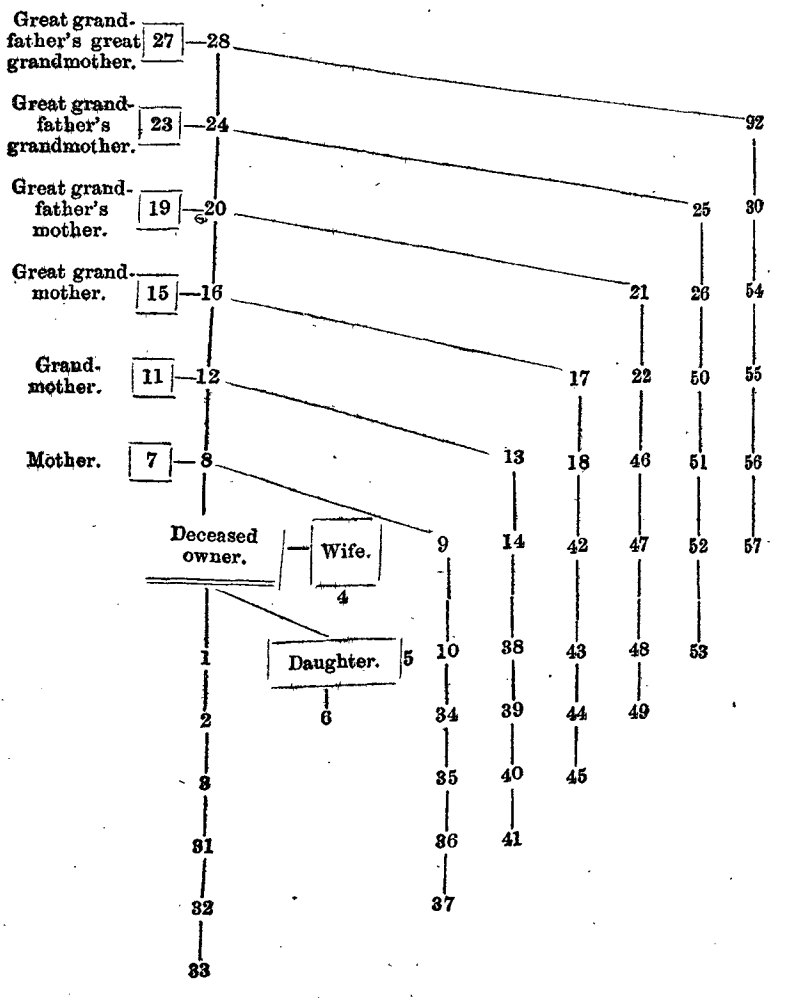


The figures enclosed in squares indicate the female *Gotraja Sapiṇḍas*: all the unenclosed figures represent males. 8, 12, 16, 20, 24, and 28 are the deceased's ascendants. 9, 13, 17, 21, 25, and 29 are the sons of these ascendants respectively. The perpendicular columns denote collateral lines of male *Sapiṇḍas* for six degrees descending from each ascendant.

An inspection of the table will show that when the seven female *sagotra sapiṇḍas* and the two heirs out of the *gotra*, viz., the daughter and the daughter's son, are excluded, there remain 48 male *gotraja*

*sapiṇḍas*. Of these, the order of heirs up to No. 10 has been fixed by Yájñavalkya (ch. ii. v. 132), from No. 11 up to No. 18 by Vijñáneśvara (see above p. 360) and from No. 19 up to No. 30 by Viśveśvara in the Subodhiní (see above p. 361), and I have supplied the remaining numbers according to the authorities.

Thus the male *sapiṇḍas* inheriting as such are divided into two groups, the first consists of five grades,[1] each grade containing three persons; the second consists of seven grades, the first containing three persons, and the remaining six of four persons each.[2] Members from the first group inherit before those in the second. The order throughout is indicated by the numbers.

Those in the first group (Nos. 12 to 30 in the table) are stated by Vijñáneśvara and his commentator Viśveśvara in the Subodhiní. I supply the order of the rest in the following manner. In stating the heirs after the brother's sons, Vijñáneśvara describes the *Gotrajáh* to be *pitámahí, Sapiṇḍáh* and *samánodokáh*.[3] There are thus three classes; of these classes the second is that of *sapiṇḍáh*. In the same passage, after enumerating the *sapiṇḍas* as far as Nos. 16, 17, and 18, (see table page 378, and the passage at p. 360) he says *evamásaptamát, &c.* (in this manner up to the seventh [*sapiṇḍa*], the taking of wealth by *sagotra sapiṇḍas* should be known).

After stating how the *gotraja sapiṇḍas* are succeeded by the *Samánodakas*, Vijñáneśvara quotes[4] the following verse from *Bṛihan-Manu*:—

सपिण्डता तु पुरुषे सप्तमे विनिवर्तते ॥
समानोदकभावस्तु निवर्तेताचतुर्दशात् ॥

Here also it is clear that *sapiṇḍa*-ship ceases (lit. returns) at the seventh *purusha* (person): *Samánodoka*-ship at the fourteenth. It is clear, therefore, that all the males up to the seventh degree as given in the table are heirs; and Vijñáneśvara's enumeration up to No. 18 fixes the order as far as No. 18, and leaves the order of the remaining *sapiṇḍa* heirs to be supplied. Viśvesvara carries it up to No. 30,[5] and those that are declared to be heirs by the text *ásaptamát*[6] must be classified as above according to Manu chap. ix. v. 187, which is adopted by Vijñáneśvara.[7]

---

[1] The nearer *sapiṇḍas*. [2] The remoter *sapiṇḍas*.

[3] See above p. 360.

[4] Mit. ch. ii. leaf 60 p. 2 lines 12 and 13. See my observations on the corresponding verse from Manu ch. v. verse 60 at page 82 Part II. note 1.

[5] See page 361. [6] See page 360.

[7] Mit. ch. ii. leaf 59 p. 2 lines 11 to 13, and l. 60 p. 1 l. 3; see also Ápastamba quoted by Vijñáneśvara at l. 60 p. 2 l. 2. See the same Sútra of (2, 6, 14, 2), in the edition of Ápastamba by Dr. Bühler, vol. I. p. 72, and vol. II. p. 78.

In regard to the two groups above mentioned by me, there is a difference of opinion. Mr. Harrington, judge of the late Sadr Court of Calcutta,[1] considers that the line of the [*Sapiṇḍa*] heirs is to be continued down to the seventh descendant, from the propositus and from each ascendant, so that the deceased owner's own descendants come first, next the father and his descendants, next the paternal grandfather and his descendants, and so on. This conclusion is opposed to both Vijñáneśvara and Viśveśvara, and is not borne out by the arguments adduced. In reference to the arguments I may say that there is some confusion in the report in regard to the Mitákshará and the Dáyabhága or Gauḍa authorities; and no references are given to the texts cited; but so far as I can follow those arguments after perusing the entire Dáyabhága chapters alluded to, they amount to four; three based on different interpretations of the word *putra* (son) and its equivalents, and the fourth on the interpretation of the word *santána* (issue). First of all Mr. Harrington holds that a strict interpretation of the word *putra* would exclude the grandson, or the great grandson, from succeeding after the son.[2] Mr. Harrington's references to Colebrooke's translation of the Mitákshará show that all Yájñavalkya that was then translated and was available to him for reference were the 35 verses (114 to 149) of chap. ii. In these, the word 'son' occurs in the form of *suta, putra, tanaya*, in fourteen verses.[3] These three terms are equivalents of *atmaja*[4] (son), literally one born from one's self.[5] The word *Putra* (son) in verse 136 alone is construed as son's son and son's grandson as well as son, in consequence of the authority of various texts and comments. Thus Bálambhaṭṭa:—अत्र पुत्रग्रहणं पौत्र[प्रपौत्र]योरुपलक्षणम्. Translation:—Here the use of the word *Putra* [is to be taken as] *upalakshaṇa* (illustration of) *pautra* (son's son), and *prapautra* (son's grandson).

Mitra Miśra: [while on the subject of the wife's right to inherit, and in reference to the same verse] says:[6]—

अपुत्रपदं पत्नीत्यादिषु श्रूयमाणं पौत्रप्रपौत्राभावोपलक्षणम् ॥

Translation:—The word *aputra* which is met with in [texts beginning with] *patni*,[7] &c. is illustrative of [one without] the son's son, and the son's son's son.

Jímútaváhana also, while discussing the widow's right of succession,

---

[1] Moore, Indian Appeals, vol. II. p. 132 (*Rutcheputty Dutt Jha and others* v. *Rajender Narain Rae and another*), see pp. 149—160.

[2] Yáj. ch. ii. v. 136.

[3] The word *suta* occurs in vv. 114, 117, 122, 128, 129, 132, 134, 135; *putra* in vv. 121, 127, 130, 136 or 142, and *tanaya* in v. 133.

[4] Amarakośa, II., 6, 29, Bombay Ed., p. 137.

[5] Amarakośa, II. 6, 27. Bombay Ed. p. 137.

[6] Víramitrodaya leaf 198, p. 2 line 7.

[7] Yáj. ch. ii. vv. 135, 136 are referred to.

quotes Manu, Vishṇu, Hárita, Yájñavalkya (I. 78), Saṅkha, Likhita, and concludes[1] :—

" अत एव पुत्रपदं प्रपौत्रपर्यन्तानामेव."

Translation :—Hence the term *putra* [stands for descendants] up to the son's son's son.

Kamalákara in his Vivádatáṇḍva quoting Yáj. ch. ii. v. 136 says :—

अत्रेदं तत्त्वं त्रयन्स्याप्नोति विष्टपमिति शङ्खलिखितवसिष्ठपैठीनसिवचनैः त्रयाणामुदकं कार्यं त्रिषु पिण्डः प्रवर्तते इति मनूक्तेर्लोकानन्त्यं दिवः प्राप्तिः पुत्रपौत्रप्रपौत्रकैरिति याज्ञवल्क्योक्तेश्च पुत्रादीनां त्रयाणां मुख्यत्वात्तदभावे — — — — — — — — — — यस्त्वसंसृष्टिविभक्तो मुख्यपुत्रपौत्रप्रपौत्रगौणपुत्रहीनो मृतस्तस्य सर्वस्थावरादिधनं ब्राह्मादिविवाहोढा* संयता पत्नी — — — — — 10 गृह्णीयात्।

Translation :—Here the truth is that inasmuch as three [descendants] commencing with the son are principal [heirs], in accordance with the text of Śaṅkha, Likhita, Vasishṭha, and Paiṭhínasi [ending in] 'attains the world of the sun,'[2] with the text of Manu, viz., 'water should be offered to three [ancestors] and [so] is the *Piṇḍa* offered to three [ancestors],' and with the text of Yájñavalkya, 'the attainment of worlds, eternity, and of heaven is through sons, son's sons, and son's son's son [respectively],' it is on failure of them that . . . . in the case of one who being divided and not reunited dies without leaving the prin- 20 cipal [*i.e.* the legitimate] son, son's son, or son's son's son, and the secondary sons, the whole wealth including immoveables belongs to the widow, who was married according to the Bráhma, or a like form, and is chaste.

The Dharmaśástra rules of criticism require that to each word should be assigned its plain meaning, unless the context or some authority is clearly opposed to such an interpretation. Again, Mr. Harrington gives no authority for so vague a use of the word *putra* as will include seven descendants. Such an interpretation is unwarranted by Sanskrit idiom and grammar, and is opposed to the express authorities above 30 quoted.

Secondly :—Mr. Harrington (p. 157) rests his conclusion on the following words of the Mitákshará :—'The same holds good in respect to *their* sons and other [descendants]' ;[3] and also on the commentaries of Viśveśvara and Bálambhaṭṭa there. Now with reference to the demonstrative pronoun '*their*' in the above extract, it is clear from the context that it refers to all those who have been mentioned in that paragraph of Mr. Colebrooke's translation which explains the meaning

[1] See Dáyabhága with Śri Krishna Tarkálankára's comments; Calcutta, 1829, p. 251, lines 2 and 3. The original texts are given *in extenso*, but I do not quote them here, 40 as it will unnecessarily take much space : they are at pp. 248 to 251.

[2] See Manu ch. ix. v. 137.

[3] See Coleb. Mit. ch. i. sec. 1 para. 3 Stokes' edition p. 365 lines 11, 12.

of the two phrases—namely, the obstructed and the unobstructed succession. That it does so refer also appears from Bálambhatta, who says:—

तत्पुत्रेति पुत्रपौत्रपितृव्यादिपुत्रादिष्वपीत्यर्थः

Translation:—*Their sons, &c.* The meaning is 'in the case of the sons and the like of the son, grandson, the paternal uncle, &c.' The translation of this line given by Mr. Colebrooke (para. 4 of note 3 on p. 365 Stokes' Ed.) has been evidently misunderstood by Mr. Harrington. As regards the support drawn from Viśveśvara's comment I must say that his language as translated by Mr. Colebrooke on p. 365 note 3 Stokes' edition is somewhat vague and inaccurate. Indeed the original passage in the Subodhiní itself seems to be confused by the term अत्र तच्छब्देन पुत्रपौत्रयोः पुत्रादयः गृह्यन्ते. Translation:—Here by the word *tat*, sons and grandsons [being understood, their] sons, &c., are to be taken. This passage is faulty. The son *can* have no descendant except through his own son. It appears to me, therefore, that there is a misreading here in the manuscript now available, and this can only be cleared up by a careful comparison of different families of MSS.

Thirdly, Mr. Harrington's argument is (p. 157): "'The same construction must, I think, be put on the words 'sons' and 'issue' (*putra* and *súnava*)[1] in the fourth and fifth paragraphs of the fifth section and second chapter of the Mitákshará, and this interpretation is indeed indicated by expressions on the same paragraphs, viz., 'on failure of the father's descendants' (*santána*) and 'on that of the paternal grandfather's line' (*santána*)." The fifth paragraph of ch. ii. sec. v. as above referred to runs thus:—"On failure of the paternal grandfather's line, the paternal great grandmother, the great grandfather, his sons and their issue inherit."[2] *Súnu* means son, and not *issue*.[3] Mr. Harrington was evidently not aware to what absurd lengths the word *santána* would lead if strictly interpreted; but apart from that objection, if the word *putrah* (sons) is to be understood as standing for any male descendant, then Vijñáneśvara is guilty of tautology in using an alleged synonymous expression *súnavah* immediately after *putrah* in the same passage. But this interpretation is not correct.[4]

Fourthly and lastly, Mr. Harrington thinks that the use of the word *santána* shows that descendants in general were indicated. This is not correct. On this point there is no ambiguity left. For Viśveśvara in the Subodhiní in explaining the phrase पितृसन्तानाभावे (Translation:—"On failure of the father's issue") says:— पितृसन्तानो भ्रातृसुतपर्यन्तः (Transla-

[1] It should have been either *súnu* or *súnuvah*.

[2] See Stokes' edition p. 447.

[3] Amarakośa, II., 6, 27, Bombay Ed. p. 137.

[4] Mit. leaf 60 p. 2 l. 11:—तत्पुत्रास्तत्सूनवश्चेति.

tion:—The line of the father [must be understood] to be [or to end] up to [or with] the brother's sons.)

Mr. Colebrooke translates *Santána* first into "descendants," (para. 4, line 1, Stokes' H. L. B. p. 446,) and again at p. 47 (para. 5, line 1) into "line." This is not correct, and often misleads. It should be either uniformly translated or simply transliterated.

Mr. Harrington's theory therefore is not supported by any authority, and his inferences, based on the words *putra, súnu* and *santána*, are etymologically incorrect; and are opposed to the interpretation of Viśveśvara, and to the text of Kátyáyana as received by digest-writers.

Again, on the same point Messrs. West and Bühler in their "Digest of the Hindu Law of Inheritance and Partition," observe:—

"The principle suggested by Mr. Harrington, namely, to continue each line of heirs down to the seventh person, and thus to allow, first the brother's descendants to inherit, next the paternal uncle's descendants, and so on, can easily be carried out in the case of the paternal uncle's line and those descended from the sons of remoter ancestors. But it is impossible to allow the brother's grandsons, great-grandsons, and remoter descendants to inherit before the paternal grandmother, since the right of the latter to succeed immediately after the brothers'sons is clearly settled, not only in the Mitákshará, but in all the law books of the Benares Schools and in the Mayúkha. Besides, under this arrangement, the remoter descendants of the deceased himself, as great-great-grandsons who possibly might be in existence at the great-great-grandfather's death, would be lost sight of altogether. In order to provide for the rights of these persons who undeniably have a right to inherit, they might either be considered as coheirs with the descendants of the paternal uncle, who are equally distant from the deceased, or placed after the paternal grandmother, and before the paternal grandfather, viz., 1, paternal grandmother; 2, deceased's great-great-grandsons, or remoter descendants to No. 7 if living; 3, brother's grandsons, brother's great-grandsons, brother's great-great-grandsons and their sons; 4, paternal grandfather. The second arrangement seems to be the more satisfactory, as it follows the principle indicated by the Mitákshará, that the succession is to go to the direct and the several collateral lines, after providing for the grandmother conformably to Manu's text in her favour, in the order in which they branch from the common stem."—(First edition p. 143; second edition p. 176).

Here two things appear to be assumed by the learned editors:—

1. That the *Pitámahí's* (grandmother's) position in the order of succession is settled, while that of the *Pitámaha* (grandfather), his sons and his grandsons is not equally settled.

2. That there is no received rule for determining the order of succession of the Sapiṇḍas succeeding under the present text of Yájñavalkya (chap. II., v. 135), and that one has now to be fixed for the first time.

On both these points the answer must be in the affirmative, and against the course of succession above suggested by the learned editors.

For, as I have shown before,[1] the following are fixed by Vijñáneśvara himself:—

| | | | |
|---|---|---|---|
| No. 11. | Father's mother (*Pitámahí*). | No. 13. | Father's father's sons. |
| 12. | Father's father (*Pitámaha*). | 14. | Father's father's grandsons. |

[1] Table, see page 378; authorities, pp. 360—364.

And again:—

No. 15. Father's grandmother (*Prapitámahí*). No. 17. Father's grandfather's son.
16. Father's grandfather (*Prapitámaha*). 18. Father's grandfather's grandson.

These are expressly settled by Vijñáneśvara's text thus:—

"पितामह्याश्चाभावे समानगोत्रजाः पितामहादयो धनभाजः"

Translation:—On failure of the father's mother, those of the same *gotra* such as the father's father and the like are takers of wealth.

तत्र च पितृसन्तानाभावे पितामही पितामहः पितृव्यास्तत्पुत्राश्च क्रमेण धनभाजः। पितामहसन्तानाभावे प्रपितामही प्रपितामहस्तत्पुत्रास्तत्सूनवश्च॥

Translation:—Thus on failure of the father's line, the father's mother, father's father, father's brothers, and their sons are takers of wealth in order. On failure of the father's father's line, the father's father's mother, father's father's father, his sons, their sons.

Vijñáneśvara himself fixes the *Pitámahí's* position, and expressly says that Manu's text is merely for showing that she has a right to take[1]; and by thus citing Manu he evidently justifies her being thus brought into his *sapratibandha* scheme, for she would otherwise have no place according to the text of Baudháyana. The very passage of Vijñáneśvara which fixes the position of the father's mother, also fixes that of the father's father, and in precisely the same manner; and I cannot therefore understand how he can be displaced in opposition to *the order* fixed by Vijñáneśvara and by a series of writers of acknowledged position, following Vijñáneśvara. It will be thus seen that the order as far as No. 30 of my table (see page 378) has been fixed by Vijñáneśvara and Viśveśvara. And with the exception in the case of Gauda writers such as Jímútaváhana and others, he has been followed by writers like Bálambhaṭṭa, Mitra Miśra, Kamalákara, and Gágábhaṭṭa.

Again, as regards the order by which one ascendant with his two descendants is taken by me in the above enumeration before going to the rest of the *sapiṇḍas* in next line, this is also clearly settled by authority. First of all, Viśveśvara himself, in his second work entitled Madana Párijáta, shows[2] how the male *sapiṇḍas* of three

---

[1] Mit. ch. ii. leaf 60 p. 1 line 8:—धनग्रहणाधिकारप्राप्तिमात्रपरत्वात्.

Other writers while admitting her right, fix her portion according to their own views. Thus Vachaspati Miśra places her at the end of *Sakulyas* according to his nomenclature, but *Sapiṇḍas* according to Vijñáneśvara's. See Vivádachintamani (Calcutta), Samvat 1874 page 53; Translation by Babu P. C. Tagore, p. 294.

[2] The work is attributed to Madana Pála, in the colophon of each *stabaka* (chapter). But he must be the king under whose auspices the work was composed by Viśveśvara (see Sanskrit Vyavastha Chandriká vol. I. note 46 p. 15). There are nine *stabakas* in this work. The following passage is from the eighth *stabaka*:—

पितामहस्याभावे पितृव्याः तत्रापि सोदरभिन्नोदरव्यवस्थापूर्ववदेव साक्षात्पितामहीपुत्राः प्रथमं धनभाजः तदभावे सापत्नपितामहीपुत्राः तेषामप्यभावे भ्रातृपुत्रन्यायेन पितृव्यपुत्रास्तेषामभावे तत्पुत्रा अपि पूर्वोक्तरीत्या प्रत्यासत्तिविशेषो द्रष्टव्यः

grades only succeed in each case by the analogy of the father, the father's sons [*i. e.* the paternal uncle], and the father's grandsons as given by Yájñavalkya. The passage which follows this rule is given at page 361, and clearly gives the names and order of succession of the Gotraja *sapiṇḍas* up to number 30 in my table.[1]

In like manner, Kamalákara, after mentioning the succession in default of the brother's sons, says:—

तदभावे तयैव दिशा पितामहपितृव्यतत्पुत्रास्तदभावे प्रपितामहीप्रपितामहतत्पुत्रा इत्येवमासप्तमं सपिण्डास्तदभावे सोदका धनभाजः

Translation:—Following the same direction [*i. e.* proceeding on the analogy of the order of succession expressly mentioned by Yájñavalkya up to brother's sons], in default of her, the father's father, father's brothers and their sons take the wealth; failing them, the father's father's mother, father's father's father, his sons and their sons; in this way, *sapiṇḍas* up to the seventh [degree] take. Failing those the *Samánodakas*.

Again, this order is expressly followed by Bálambhaṭṭa, and by all the other writers I have named above. It seems also that this interpretation of Vijñáneśvara had become fixed by usage, and had been accepted even before the time of Viśveśvara, by such eminent authorities as Mádhava and Devaṇṇa Bhaṭṭa or Devánanda-bhaṭṭa, as he is styled in the Calcutta edition of the Smṛiti Chandriká. Thus a succession of digest-writers and commentators have fixed the order of *sapiṇḍas* up to number 30, and such order, whether convenient or not, is now binding, and must be accepted. In regard to the rest, I have briefly indicated the rule which settles their order of succession. To make the matter clearer, I must add a few words. Manu (chap. ix., v. 187) says: "अनन्तरः सपिण्डाद्यस्तस्य तस्य धनं भवेत्." Translation:—'To the next amongst the *Sapiṇḍas*, the *dhana* (wealth) belongs.' This nearness begins with the 4th, 5th and 6th descendants of the propositus (Nos. 31 to 33, table p. 378), and the remaining four *Sapiṇḍas* of each series one after the other (see Nos. 31 to 57 in table, p. 378). Vijñáneśvara's statement *ásaptamát* (up to the seventh) is exhaustive as to number, and there is nothing illustrative in this passage. Where the term *Bandhu* is taken as illustrative, it is done on the authority of Mitra Miśra[2] to supply an omission; but the person so introduced, comes after the enumerated Bandhus, although if nearness

Translation:—Failing the father's father, the father's brother [succeeds]. Here the distinction between the full blood and half blood [is to be understood] as before. [Thus] the sons of the father's mother first take wealth. Failing them the sons of the father's stepmother. Failing those, the sons of paternal uncles [succeed] on the analogy of the brother's sons [mentioned in the verse of Yáj. regarding the order of heirs]. In their default, their sons [succeed]. Thus the propinquity [for succession] is to be determined after the aforementioned manner.

[1] See page 378; and the rest of the passage from Madana Páríjáta at pp. 360, 361.

[2] Víramitrodaya, leaf 209, p. 2, l. 8.

alone were considered, the maternal uncle, so introduced, would come before his son, which he does not.

I cannot see how this order, expressly fixed by rules, can now be altered. Were it open to do so, many other orders might be suggested. Thus, if the field had not been pre-occupied by Vijñáneśvara and his followers, the easier course would have been to leave off the *sapiṇḍas* with the grandfather, begin at the son of the great grandson (No. 31), and carry the seven stems through in a regular manner. Another course would be to take three persons from the *propositus* all through, and then exhaust the seven lines beginning with that of the deceased. A third course would be the one indicated by Messrs. West and Bühler, beginning after the *Pitá-mahí*, on the ground of her being mentioned by Manu. A fourth would be the order of the Mayúkha, wherein simultaneous succession opens out to different sets of *sapiṇḍa* heirs.

I will now make a few notes on decided cases. In *Rutcheputty Dutta Jha and others* v. *Rajunder Narain Rao and others*,[1] it was held, according to the Mithila Śástra, that "the party in possession being descended in the sixth degree in the paternal line was to be preferred to the maternal line." The position of the contending parties is given below.[2]

There is no contest here between *Sapiṇḍas* of any kind or degree.[3] The plaintiff's (appellant's) father was neither a *Bandhu* nor a *Sapiṇḍa*, near or remote, even out of the hundreds named in the marriage section.[4] As a son of the sister of the wife of the deceased propositus, he was no relative of the deceased under any system of Áryan law in India. And I confess I cannot see how all the discussion in the case should have arisen.

In *Rany Srimuty Dibeah* v. *Rany Koonda Luta and others*,[5] it was

[1] 2 Moore's Ind. Appeals, 132.

[2] The following tree, constructed from the report on p. 133, shows the relationship of the parties:—

Sumrao Chowdrey (original owner).

| Raja Inder Narain, (sixth male descendant; the last deceased from whom succession was claimed). | Sree Narain (a sixth male descendant) [also deceased]. |
|---|---|
| Ganga Dutt Jha, son of the sister of the wife of the deceased Raja Inder Narain. (Plaintiff) Appellants. | Rajunder Narain Rae and Coower Mohinder Narain Rae (sons) (Defendants,) Respondents. |
| Rutchputty Dutt Jha and others, sons, heirs and representatives of Ganga Dutt Jha, deceased. | |

[3] Such an heir does not appear in the Table prefixed to Babu P. C. Tagore's Translation of Vivádа Chintamani: second ed. 1865.

[4] See above p. 347.

[5] 4 Moore's E. I. Ap., 292.

held according to the Dáyabhaga Śastra which governed the descent, and not the Mitákshará, that a gift of Zamindaree to a stranger by the widow of the last Zamindar who died without issue, made with the confirmation of the mother's brother's sons, was valid as against the claimants under the Mitákshará, as being descended in the seventh remove in the male line from the common ancestor.

In *Bhyah Ram Sing* v. *Bhyah Agur Singh*,[1] the question was (page 390) "whether the plaintiffs, being great-great-great-grandsons of the common ancestor, were too remote in degree to be heritable as gentiles." There was no contest between two persons as heirs or between two classes of heirs (p. 392). This case is followed in *Thakoor Jeebnath Singh* v. *The Court of Wards*,[2] wherein it is held that the great grandson of the deceased's great-great-great-grandfather is by Hindu law entitled to succeed in preference to the father's sister's son. The two previous cases, "one in the 2nd Moore p. 132, and the other in the 4th Moore, p. 292," are referred to by their Lordships (p. 165) as being those the principle of which had been followed in the case from the 13th Moore just referred to.

In *Thakoorani Sahiba and another* v. *Mohun Lall and others*[3] the sister's son is held not to be an heir to his deceased uncle's property ac-

[1] 13 Moore's E. I. Ap. 373; same case: 5 Beng. L. R. 293; the first two paragraphs of the head note run as follows:—"According to the Mitákshará and the authorities of the *Benares* school of law as received in the North-West Provinces, grandsons in the fourth and fifth removes are *Sapiṇdas* and heirs to their common ancestors. The question of preference in succession is distinct from exclusion, as the preference is founded by the Hindoo Law on the superior efficacy of funeral oblations."

This being a Mitákshará case, the last opinion appears opposed to Vijñáneśvara. The case in the 4th Moore, p. 292, is a Dayabhága case; and the one in the 2nd Moore p. 132 appears to be between a remote Sapiṇda and one not an heir at all.

[2] 2 Law Reports, Ind. Ap. 163.

[3] 11 Moore E. I. Ap. p. 386. The following will show the relationship of the parties:—

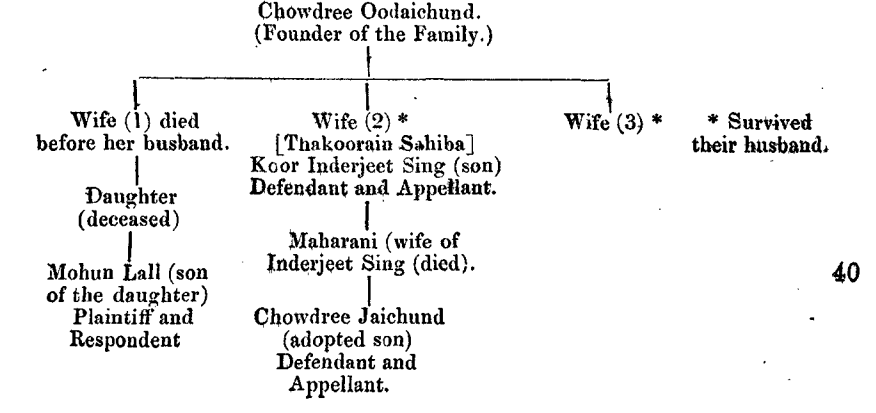

cording to the Benares exposition of the Mitákshará. The question of *Sapiṇḍa* succession is discussed ; but the defendant in possession being an adopted son of the last owner, the *Sapiṇḍa* succession question cannot arise.

In *Koore Goolab Sing and others* v. *Rao Kurum Sing*,[1] it was held that by the Mitákshará, a male descendant in the fifth degree from the great grandfather of the *propositus* succeeds to the exclusion of the sister's son. In *Thakur Jibnathsing* v. *The Court of Wards and another*,[2] it is held that the grandson of the great-great-great-grandfather of the deceased is, according to the Mitákshará, a nearer heir to the deceased than his father's sister's son.

Sisters in Madras were held to have no title to brother's property.[3] The case is decided in accordance to usage "prevailing beyond memory and acquiesced in by all parties concerned." The texts cited were regarded as "virtually changed and modified by practice." The same is also held according to Hindu law in other cases.[4]

But it has since been held that although she may not succeed as a *sapiṇḍa*, she may as a *Bandhu*.[5]

Similarly sister's sons were held to have no right to inherit.[6] But the opposite has been since held also in the same Presidency, though it would seem to be in his right as Bandhu.[7] In another Madras case,[8] the Privy Council give no decision as to the sisters succeeding as *Bandhus*, but observe that they "could only so succeed after the Sapiṇḍas, of whom there are several, had been exhausted."

In *Lakshmibái* v. *Jairam Hari and others*,[9] it seems to be held in

---

[1] X. Beng L. R. (P. C.) p. 1. This is a N. W. P. case.

[2] V. Beng. L. R. p. 442.

[3] Madras S. D. for 1858 page 175 suit 118 of 1858.

[4] See also *Kasale Arumugum* v. *Palaniyi and another*—19th November 1859, Madr. S. D. R. Dec. 1859 p. 247 ; *Nagalinga Pilai* v. *Vaidelinga Pillai* 7th November 1860, Madras S. D. R. December 1860, page 245.

[5] 8 Madras H. C. p. 88.

[6] Madras High C. R. p. 85, *Doe on the demise of Kullamal* v. *Kuppu* ; see also *Ranee Parvata Vurdhany Nandear* v. *Sveasawmy*. Tover, Madras S. P. R. December 1858, page 209.

[7] *Chelukani* v. *Raja Surtuneni*, 6 Madras H. C. R. 278.

[8] Indian L. R. 1 Madras Series p. 185, (Vellanki Venkata Krishna Ráo *v.* Venkata Ráma Lakshmi and 2 others).

[9] VI. Bombay High Court R. (A. C. J.) 152.

The Court assign three authorities for the above conclusion :—(1) Mitákshará (Colebrooke's Translation) ch. ii., sec. 5, para. 5 ; (2) West and Bühler, pp. lii, liii, (Introduction, 1st Ed.) and introductory remarks to Digest ch. ii., sec. 14 ; and (3) Viśveśvara's Subodhiní extending the list of *Sapiṇḍas* mentioning the great grandfather's grandmother. In regard to grounds 1 and 3, I would refer to pages 360—364 above. The deduction made by Messrs. West and Bühler, and above relied upon, rests on cases at pp. 149—174 of the Digest, as to which see above pp. 372—377.

Bombay for the first time, (no earlier case is there quoted,) under the Mitákshará, that "the wives of all *Sapiṇḍas* and *Samánodakas* must be held to have rights of inheritance co-extensive with those of their husbands." This is very wide, and as at the best, the widows might take a life-estate, if they take at all, the term co-extensive can hardly be accurate.

In *Baee Jeta* v. *The heirs of Haribhai Bhagvandas*,[1] a *wattan* was held to be heritable by the daughter-in-law of the last male owner in preference to a male opponent of another and an entirely distinct branch of the family. It was found that the *wattan* had never been held by the opponent's branch; but the decision was founded on the preceding case of *Laxmibai* v. *Jayram Hari and others*. In case of *watan* property, the tenure of which is regulated by usage controlled by the state, and is thus limited to a particular branch, the Hindu law cannot operate, except within that branch.

In *Lallubhai Bápubhai and others* v. *Mankuvárbai and others*[2] the widow of a remote male *sapiṇḍa* was held to be entitled to succeed in preference to a more remote male *sapiṇḍa*. The decision is based chiefly on the interpretation of Vijñaneśvara. The distinction of different kinds of *sapiṇḍa* relationship which has been previously explained, is there denied. But it was not pointed out that Vijñáneśvara had divided the work not only into *Adhyáyas*, but into *prakaraṇas*. Thus A'chára-dhyáná is divided into several *prakaraṇas* (sections). Thus marriage forms one, and *Śráddha* another (see headings in Part II. pp. 157—274). Out of a very large number who are all nominally *Sapiṇḍas*, some only enter the Śráddha ceremonial. This is so stated in all the current ceremonial works. In marriage there are 2121 *Sapiṇḍas* by the texts of Yájñavalkya as interpreted by Śridhara, Anantadeva, Nágojíbhaṭṭa, and others. But these cannot come into the Dáyabhága Section by any stretch of the imagination. Yájñavalkya, II. 135, which relates to the *Sapratibandha* succession, contains the wife, daughter, and mother, directly mentioned. These are *Sapiṇḍas* of the deceased. But they do not take the *dáya* as *Sapiṇḍas*. The Mitákshará, which relates to this portion, is complete in its rules, and requires no provisions from the marriage section to supplement it. Mitra Miśra is one of the best commentators of the Mitákshará, and the passage translated elsewhere (pp. 362—364) is free from all ambiguity. No authority is given for holding that he used to quote from

[1] Printed Judgments of the Bombay High Court for 1872, No. 38 of 1872.

[2] Indian L. R., Bombay series, p. 388; this case is followed in Special Appeal No. 474 of 1874, decided on 17th October 1879; Printed Judgments p. 538. In this last case the claim of the daughter-in-law of the deceased was preferred to that of the deceased husband's paternal uncle's son. Here the daughter-in-law has come in against the fixed order of Vijñáneśvara, the last member of that order being the grandfather's brother's sons.

memory as is said in the Digest. The printed edition is not correct in several places. But this is easily righted by revising it with the aid of proper manuscripts and competent Śástris. Sir W. Jones' translation of Manu, chap. ix., 187, is vague. Kullúka does use the words *pumán-strívá* (male or female). But he does this in order to justify the inclusion of the wife, daughter, mother and grandmother by special texts; he excludes the wives of the uncle and uncle's son; he ends the series under Yájñavalkya, II. 135, with the *pitri-matá* (father's mother), and says तदभावे अन्योपि सन्निकृष्टः सपिण्डः मृतधनं गृह्णीयात्. Translation:—In her absence, another near *sapiṇḍa* [male] will take the deceased's wealth.

Those who would interpret Kullúka as laying down some *Dharma* (law) in opposition to the Śruti forget his own rules of interpretation, particularly those referred to in chapter ii., vv. 6—15. He distinctly denounces such interpretations as heretical (Manu-Smṛiti, leaf 15, p. 1, line 1). His words *anyah*, *sannikrishṭah* and *sapiṇḍah* are in the masculine. The same rule applies to Viśveśvara's interpretation of the word *Gotrajah* in the Subodhiní. Yájñavalkya, II. 136, uses the expression *sarva varṇeshvayam vidhih*. Translation:—This rule [is] among all classes. Colebrooke's Translation (Stokes' H. L. Books, p. 427, line 10) '[and persons]' is wrong.[1] So also, Mr. Colebrooke's translation of *sarve* into tribes and classes (Stokes' H. L. B. p. 427, para. 1, line 3,) is incorrect, and paragraph 4 on the same page is loose. Mayúkha and Mitákshará are two of the exponents of Áryan law, but they are not all the law. These works themselves contemplate the use of other works—Vedas and Smṛitis. Mr. Steele enumerates the works consulted in Poona, Khandesh and Southern Marátha Country. As a fact the people consult all works contemplated by the Mitákshará before they decide upon anything.

It is said that the definition of *Sapiṇḍa* relationship in the *Áchárá-*

[1] Vijñáneśvara's passage is quite clear (see Miták. ch. ii. leaf 57, p. 1, line 3):—सर्वेषु मूर्धावसिक्तादिष्वनुलोमजेषु सुतादिषु प्रतिलोमजेषु वर्णेषु च ब्राह्मणादिषु अयं दायग्रहणविधिः Translation: 'Among all [*i. e.*] amongthe *anuloma* [classes] like the Múrdhávasikta and others, and *pratilomas* like the Sútas and others, and amongst the classes, like the Bráhmanas and others, [3 classes], this is the rule for taking *Dáya*.' On this Viśveśvara(in the Subodhiní) says:—सर्ववर्णेष्वयं विधिरित्यत्र सर्वशब्दो न वर्णविशेषणं अपि तु स्वतन्त्र एव तथाच सर्वे च ते वर्णाश्चेति समाहारे समासान्तर्गतश्चशब्द इत्याह सर्वेषु मूर्द्धावसिक्तेष्विति ।। Here Viśveśvara quoting the clause *Sarvavarṇeshvayam vidhih* says:—'here the word *sarva* (all) does not qualify *varṇa* (class), but is an independent term; *sarve* (all) and *varnáh* (classes) being joined' in a compound, the particle *cha* [used by Vij.] is included in the compound; and hence Vij. says that the word *sarveshu* (amongst all) means amongst the *Múrdhávasiktaś*. So that there is no ambiguity in this expression whatever.

Besides, although an *ekaesha* compound of males and females is possible (Pánini I. 2, 67), a *virápaiksesha* can only be adopted when the context necessitates its adoption (see Vír.'s leaf 208, p. 2 lines 10—11). Here both the text and context are against such a construction. The whole text relates to a deceased *male* owner of wealth.

*dhyáya* of the Mitákshará by Vijñáneśvara and in the Samskára Mayúkha by Nílakaṇṭha agree, and the laws of the Hindus (Áryans) of succession and religious ceremonial are so blended, that a *Sapiṇḍa* for one purpose must be a *Sapiṇḍa* for another. The Áryan law is no doubt so framed that one influences the other; but succession and ceremonial are distinct subjects, and are separately treated, and must be so. The classification of *Sapiṇḍas* in the preceding portion and the authorities noted below will make it clear that a *Sapiṇḍa* for one purpose is not necessarily a *Sapiṇḍa* for another.[1] Wherever the Víramitrodaya clears up, or supplies what is ambiguous, or not laid down in the Mitákshará, its authority is acknowledged by the people.[2] And when it interprets the law in consonance with the Śrutis and Smṛitis, it must be obeyed, unless the authorities of the texts cited is met or explained away. [See Kullúka's Commentary on Manu, leaf 14, p. 2, and leaf 15, p. 1, and Miták leaf 1, p. 2, and leaf 2, p. 1.] The number of works consulted on *Gotranirnaya* by the people is very considerable; to these however the court unfortunately was not referred, and Mr. Monier Williams' Dictionary was consulted as to the meaning of the term gotraja. The Dictionary is cited thus in the judgment:—"Mr. Monier Williams in his Dictionary (page 297, column 2) gives to that word the two limited meanings of 'born in the same family,' adding, however, also the meaning of 'relation' or 'gentile,' he is careful to refrain from describing it as denoting any one gender more than another." Dr. Williams' information is however from *Gauḍa* sources, for he makes one of the *gotraja* attributes to be the giving of food and water oblations, and contrasts *gotrajas* with the *Bandhus*. His statement that Bandhus do not partake in the offerings to common ancestors is incorrect. As to the "gender" Dr. Williams gives the radical word *gotraja*, and immediately after the masculine, feminine and neuter affixes of *as*, *á*, *am*, before giving the equivalents.

Mr. Justice West suggests that the school of Vájasaneyins may be regarded "as specially favourable to women" (p. 440). In support of this, the dialogue of Yájñavalkya and one of his wives, which Professor M. Müller has partly translated, is referred to. But that relates to an entirely different subject—namely, to use Prof. M. Müller's own language,[3] to show "how largely this idea of the *Átman*, as the Divine Spirit, entered into the early religious and philosophical speculations of the Indians." The whole relates to the emancipation of *Átman* (self) from the fetters of this world, and to that end advises her that the

[1] See Víramitrodaya, leaf 199, p. 2, lines 8 and 9; Nirṇayasindhu, *pari.* iii. 1st half leaf 22, p. 2, line 7 where Kamalákara distinctly says:—तेन विवाहे आशौचे धनग्रहणे च त्रिधा सापिण्डयं सिद्धम्. Translation:—It is thus established that Sapiṇḍa relationship is of three kinds—for marriage, impurity, and for taking *dhana* (wealth).

[2] See also 2 Bengal L. R. (F. B.) 42. [3] History of Anc. Sans. Lit. 2nd Ed., p. 22.

*Átman* should be seen, heard, thought of, and meditated upon.[1] There was no division of property made; and if it were made, it would amount to a gift by the husband to his wives *bhartri-datta*, a species of *Stridhana* contemplated by law. The original *Upanishad* question was put in order to find out what his wife Maitreyí thought on the question of *Moksha* (final emancipation).[2]

He proposed to try the minds of his wives, offering to cut off his relation with them by giving them his *dravya* (wealth). On this, Ánandagiri observes[3] :— द्रव्येति ॥ वित्ते तु न स्त्रीस्वातन्त्र्यमिति भावः ॥

Translation :—As to *dravya* (wealth) there is no independence to women in respect to wealth. Such is the meaning.

So that this authority too is, if anything, like that of Baudháyana and Ápastamba, opposed to females.

Again, it is said that Kátyáyana Śrauta Sútra allows to women the right " of sacrifice as authorized by the Vedas" (p. 441). The references in the note to Professor M. Müller's work (2nd ed.) do not contain any passages, but it may be stated that other Sútras[4] also, such as Baudháyana, Ápastamba, Satyáshádha and Áśvaláyana, authorize women to sacrifice in a similar manner, and there is nothing peculiar to Kátyáyana in this matter at all. In all Śrauta ceremonies, the wife has to take a certain part, and in so doing has to repeat certain Vedic

---

[1] Brihadaranyaka Upanishada, Cal. Ed.; for the dialogue see pages 444 to 450, vol. I., and the end at p. 450 :—आत्मा वा अरे द्रष्टव्यः श्रोतव्यो मन्तव्यो निदिध्यासितव्यो मैत्रेय्यात्मनो वा अरे दर्शनेन श्रवणेन मत्या विज्ञानेनेदꣳ सर्वं विदितं ॥ ५ ॥ See Translation by Dr. Roer, vol. II., p. 243. The *Bháshya* and Ánandagiri's comments are not translated.

[2] See Śankara, pp. 446, 448; vol. I., Brihad. Cal. Ed.

[3] Id. p. 445.

[4] See Ápastamba Śrauta Sútra, the Darśá Paurṇamási section.

आशासाना सौमनसमित्यपरेण गार्हपत्यमुपवेशमासीनां पत्नीꣳ सन्नह्यति तिष्ठन्ती वाचयतीत्येके मौञ्जेन दाम्नान्यतरतः प्राशेन योक्त्रेण वाऽभ्यन्तरं वाससो न वासोभिः संनह्यत्यभिसंनह्यतीत्येक उत्तरेण नाभेर्निष्टर्क्यं ग्रन्थिं कृत्वा पर्यूह्य दक्षिणेननाभिमवस्थाप्योपोत्थायाग्निगृहपतउपमाह्वयस्वेति गार्हपत्यमुपतिष्ठते देवानां पत्नीरूपमाह्वयध्वं पत्निपत्न्यैषते लोको नमस्ते अस्तु मा माहिꣳसीरिति देवपत्नीरूपतिष्ठते तस्मादेशादपक्रम्य सुप्रजसस्त्वावयमिति दक्षिणत उदीच्युपविशतीन्द्राणीवाविधवा भूयासमदितिरिव सुपुत्राः अस्थूरित्वागार्हपत्योपनिषदेसुप्रजस्त्वायेति जपति ।

The comments of Rámándara and Dhúrtasvaminś Bhashya on this passage.

See also Satyáshádha Sútra.

आशासाना सौमनसामिति मौञ्जेन योक्त्रेण पत्नीꣳ संनह्यति पूषा ते ग्रन्थिं ग्रथ्नात्वित्युत्तरतो नाभेर्निष्टर्क्यं ग्रन्थिं कृत्वा सते मास्थादिति दक्षिणतो नाभेः परिकर्षत्यग्ने गृहपत उपमाह्वयस्वेति गार्हपत्यमुपतिष्ठते देवानां पत्नीरुपमाह्वयध्वमित्यपरेण गार्हपत्यं देवपत्नीः पत्नि पत्न्येष ते लोको नमस्ते अस्तु मा माहिꣳसीरिति तमेव देशं प्रेक्षत इन्द्राणीवाविधवा भूयासमदितिरिव सुपुत्रा । अस्थूरित्वागार्हपत्योपनिषदे सुप्रजास्त्वायेति दक्षिणतः पश्चाद्गार्हपत्यस्योदीच्युपविशति । सुप्रजसस्त्वावयꣳ सुपत्नीरुपसेदिमाग्ने सपत्न दम्भनमदब्धासो अदाभ्यं । मम पुत्राः शत्रुहणोथो मे दुहिता विराट् । उताहमस्मि सञ्जयापत्युर्मे श्लोक उत्तम इत्यासीना जपति ॥

Also Baudháyana Sútra.

Mantras.[1] Even now, wherever there are Śrauta fires preserved and worshipped, the Śrautin's wife must stay in the house and attend to the fires. She cannot leave the house except with the fire, although on occasions her husband may do so. This usage obtains amongst all Bráhmaṇas of the Ṛig or Yajur Vedas.

Vijñáneśvara has brought in the daughter's son on the strength of the word *cha* in Yájñavalkya in order to make Yájñavalkya consistent with other writers quoted by him, and on a principle followed by him and other Áryan writers.[2] Why he introduced the father's mother he gives his own reasons.[3]

The Víramitrodaya is arguing against and not for the widow of a collateral, although he is trying to show at the same time a certain inconsistency of Jímútaváhana in reference to the grandmother. In doing this, he is not interpreting Vijñáneśvara.[4] In regard to practice, all the cases referred to have been already remarked upon. The

---

पत्नीमन्तेरण्येवेयुत्करौ प्रपाय गार्हपत्यस्य दक्षिणपश्चिमदेश ऊर्ध्वजानुमुदङ्मुखामुपवेश्य योक्त्रेण संनह्यत्याशासानेति युक्तं क्रियाताआशीः कामेयुज्याता इत्यादि॥

See Keśavasvámi-Bháshya, leaves 9 and 10 University M.S.

See also Nṛisimha on Áśvaláyana Śrauta Sútra.

वेदप्रदानं त्वनुवाचनं च योक्त्रस्य मोक्षो द्विगुणं निधानं । अस्येापरिष्टादुदगग्रवेदनिधिः पुरस्ताच्चस पूर्णपात्रं ॥ सोदुक्षणं वाचनमञ्जलौ च तत्पूर्णपात्रं प्रणिनीय हस्ते ॥ धूत्वाग्रतो वेदतृणानि धून्वन्स्तृणन्क्रमादाहवनीयमेति ॥

[1] See Áśvaláyana Gṛihya Sútra 3, 4, 4 ; Cal. ed. p. 164.

[2] (1) Yáj. ch. i. v. 129.

सन्तोषी च भवेत्सदा । चकारात्संयतः.....मनुस्मरणात् (see Mit. l. 20, p. 2, l. 5).

(2) Yáj. ch. i. v. 166.

यश्चात्मानं निवेदयेत् । चकारात् कुम्भकारश्च.....इति वचनात् (Mit. l. 20, p. 2, l. 4).

(3) Yáj. ch. i v. 175.

मत्स्यांश्च कामतो जग्ध्वा । चकाराल्लालिकाः शणकुसुम्भादीन्.....इति स्मरणात् (Mit. l. 27, p. 1, l. 2).

(4) Yáj. ch. i. v. 195.

वासो विपरिधाय च । चकाराद्रोदनाध्ययनारम्भात्यानृतोक्त्यादिषु तथा वसिष्ठः ... ..मनुरपि... (Mit. l. 32, p. 1, l. 12).

(5) Yáj. ch. i. v. 213.

प्रत्याख्येयं न वारि च । चकाराद्दृहादि.....मनुस्मरणात् (Mit. l. 34, p. 2, l. 3).

(6) Yáj. ch. ii. v. 141.

सुताश्चैषां प्रभर्तव्याः । चशब्दात्संस्कारार्थं; (Mit. l. 62, p. 1, l. 9).

(7) Yáj. ch. ii. v. 212.

युक्तिभिश्चागमेन च । चशब्दादिष्येन वा (Mit. l. 79, p. 1, l. 4).

[3] See above p. 369.

[4] See Víramitrodaya translated above, p. 363 lines 25 to 37; and Mr. Justice West's judgment at p. 441.

cases above noticed are, so far as I am aware, the only reported decisions on this subject. I referred the point to the highest Áryan authority amongst the people of India, the celebrated Pandit Bál Śastrí of Benares, and his conclusion as to the views of Vijñáneśvara is as follows:—

" तस्मात्पितुर्मातेत्यस्य प्रपितामह्यादुपलक्षणत्वेन सप्तमगुरुषपत्नीपर्यन्तानां धनाधिकारस्य सिद्धत्वेऽपि स्नुषाभ्रातृपत्न्यादीनां प्रतिपदमनुक्तानां न कथमप्यधिकार इति मिताक्षरावीरमित्रोदययोः सिद्धान्तः । "

Translation :—Thus although the right of inheritance is established in the case of the wives of ancestors, up to the seventh, in consequence of the term ' father's mother' being taken as illustrative of the grandfather's mother and the like, yet by no means [does such] right exist in the case of the daughter-in-law, the brother's widow and the like who have not been expressly mentioned [as entitled to inherit]. This is the conclusion both of the Mitákshará and the Víramitrodaya.

---

N.B.—I have followed Kamalákara and other writers in discussing *Sapiṇḍas* under three sections. There is another department of *Áchára* (ritual)—namely, Śráddha, with which *Sapiṇḍa* relationship is in some cases connected. The *Śráddha* ceremonial however is entirely religious; and the details, though instructive in a social and religious point of view, are so extensive that I have no space for them here. On questions of partition and succession generally, some of these details might prove useful; but I cannot make room for them in this treatise.

# APPENDIX.

## IV.

### CUSTOMARY LAW.

#### SECTION I.

*Marriage.*

General observations on the subject of marriage have been made in the Introduction. In this Section I propose to treat of the subject by itself. Marriage is one of the earliest of human institutions. But it appears now clear that there was a time when such an institution was unknown, at least in some portions of Bharatavarsha.[1]

The account given below is a dialogue between Paṇḍu (father of the five great Páṇḍavas of Hastinápura), and his wife Kunti. Paṇḍú tells his wife that at one time women consorted with men like cattle; until Śvetaketu, son of the Ṛishí Uddálaka, introduced the rules of

[1] See Mahábhárata, Ádiparva, chap. 122, l. 147, p. 2. I give the whole of the chapter, as it contains a great deal of information on the subject which is not easily available to general readers :—

(महाभारत आदिपर्व, अध्याय १२२: पत्र १४७) वैशम्पायन उवाच ॥ एवमुक्तस्तया राजा तां देवीं पुनरब्रवीत् । धर्मविद्धर्मसंयुक्तमिदं वचनमुत्तमम् ॥ १ ॥ पाण्डुरुवाच ॥ एवमेतत्पुरा कुन्ति व्युषिताश्वश्चकारह । यथा त्वयोक्तं कल्याणि स ह्यासीदमरोपमः ॥ २ ॥ अथ त्विदं प्रवक्ष्यामि धर्मतत्त्वं निबोध मे । पुराणमृषिभिर्दृष्टं धर्मविद्भिर्महात्मभिः ॥ ३ ॥ अनावृताः किल पुरा स्त्रिय आसन्वरानने । कामचारविहारिण्यः स्वतन्त्राश्चारुहासिनि ॥ ४ ॥ तासां व्युच्चरमाणानां कौमारात्सुभगे पतीन् । नाधर्मोऽभूद्वरारोहे स हि धर्मः पुराऽभवत् ॥ ५ ॥ तं चैव धर्मं पौराणं तिर्यग्योनिगताः प्रजाः । अद्याप्यनुविधीयन्ते कामक्रोधविवर्जिताः ॥ ६ ॥ प्रमाणदृष्टो धर्मोऽयं पूज्यते च महर्षिभिः । उत्तरेषु च रम्भोरु कुरुष्वद्यापि पूज्यते ॥ ७ ॥ स्त्रीणामनुग्रहकरः स हि धर्मः सनातनः । अस्मिंस्तु लोके न चिरान्मर्यादेयं शुचिस्मिते ॥ ८ ॥ स्थापिता येन यस्माच्च तन्मे विस्तरतः शृणु । बभूवोद्दालको नाम महर्षिरिति नः श्रुतम् ॥ ९ ॥ श्वेतकेतुरिति ख्यातः पुत्रस्तस्याभवन्मुनिः । मर्यादेयं कृता तेन धर्म्या वै श्वेतकेतुना ॥ १० ॥ कोपात्कमलपत्राक्षि यदर्थं तन्निबोध मे । श्वेतकेतोः किल पुरा समक्षं मातरं पितुः ॥ ११ ॥ जग्राह ब्राह्मणः पाणौ गच्छाव इति चाब्रवीत् । ऋषिपुत्रस्ततः कोपं चकारामर्षचोदितः ॥ १२ ॥ मातरं तां तथा दृष्ट्वा नीयमानां बलादिव । क्रुद्धं तं तु पिता दृष्ट्वा श्वेतकेतुमुवाच ह ॥ १३ ॥ मा तात कोपं कार्षीस्त्वमेष धर्मः सनातनः । अनावृता हि सर्वेषां वर्णानामङ्गना भुवि ॥ १४ ॥ यथा मातः स्थितास्तात स्वे स्वे वर्णे तथा प्रजाः । ऋषिपुत्रोऽथ तं धर्मं श्वेतकेतुर्न चक्षमे ॥ १५ ॥ चकार चैव मर्यादामिमां स्त्रीपुंसयोर्भुवि । मानुषेषु महाभागे न त्वेवान्येषु जन्तुषु ॥ १६ ॥ तदाप्रभृति मर्यादा स्थितेयमिति नः श्रुतम् । व्युच्चरन्त्याः पतिं नार्या अद्यप्रभृति पातकम् ॥ १७ ॥ भ्रूणहत्यासमं घोरं भविष्यत्यसुखावहम् । भार्यां तथा व्युच्चरतः कौमारब्रह्मचारिणीम् ॥ १८ ॥ पतिव्रतामेतदेव भविता पातकं भुवि । पत्न्या नियुक्ता या चैव पत्नी पुत्रार्थमेव च ॥ १९ ॥ न करिष्यति तस्याश्च भविष्यति तदेव हि । इति तेन पुरा भीरु मर्यादा स्थापिता बलात् ॥ २० ॥ उद्दालकस्य पुत्रेण धर्म्या वै श्वेतकेतुना । सौदासेन च रम्भोरु नियुक्ता पुत्रजन्मनि ॥ २१ ॥ मदयन्ती जगामार्षिं वसिष्ठमिति नः श्रुतम् । तस्माच्चैव च सा पुत्रमश्मकंनाम भाविनी ॥ २२ ॥ एवं कृतवती सापि भर्तुः प्रियचिकीर्षया । अस्माकमपि ते जन्म विदितं कमलेक्षणे ॥ २३ ॥ कृष्णद्वैपायनाद्वीरु

marriage. He then gives instances in which *niyoga* had formerly taken place, and advises her to raise issue to perpetuate the line, as he was incapable of doing so himself in consequence of some curse which had been pronounced upon him. There is no evidence in this passage as to the precise time when, and the country where, the practice of such promiscuous intercourse prevailed. But the story points to times anterior to the compilation of the Vedas. For even in the earliest Veda, marriage appears to have become a well-established institution.

It is true that the term *pati* occurs in the passage given in the note; but the accounts which follow show that it is not used in the sense of a husband but of a protector. This is so from the context, and the interpretation is further supported by the mode in which the term *pati* is elsewhere used in that same portion of the Mahábhárata whence the extract is made. Various instances might be referred to. The most noted is that of the dialogue between Dírghatamas and his wife (see Mahábhárata *Ádiparva, Adhyáya* 104, vv. 30—35, leaf 133, pp. 1, 2). That the marriage relations, if there were any, were so loose as to amount to nothing, may also be shown from the intercourse between Brihaspati, the religious preceptor of Indra, and the mother of Dírghatamas and their attendant circumstances. These disclose a condition of society quite unlike ours, and more like that of the present community of Malabar.

---

कुरूणां वंशवृद्धये । अत एतानि सर्वाणि कारणानि समीक्ष्य वै ॥ २४ ॥ ममैतद्वचनं धर्म्यं कर्तुमर्हस्यनिन्दिते । ऋतावृतौ राजपुत्रि स्त्रिया भर्ता पतिव्रते ॥ २५ ॥ नातिवर्तेत्य इत्येवं धर्मं धर्मविदो विदुः । शेषेष्वन्येषु कालेषु स्वातन्त्र्यं स्त्री किलार्हति ॥ २६ ॥ धर्ममेवं जनाः सन्तः पुराणं परिचक्षते । भर्ता भार्यां राजपुत्रि धर्म्यं वा ऽधर्म्यमेव वा ॥ २७ ॥ यद्ब्रूयात्तथा कार्यमिति वेदविदो विदुः । विशेषतः पुत्रगृद्धी हीनप्रजननात्स्वयम् ॥ २८ ॥ यथा ऽहमनवद्याङ्गि पुत्रदर्शनलालसः । तथा रुक्माङ्गदनिभः पद्मपत्रनिभः शुभे ॥ २९ ॥ प्रसादार्थं मया तेऽयं शिरस्यभ्युद्यतोऽञ्जलिः । मन्नियोगात्सुकेशान्ते द्विजातेस्तपसाऽधिकात् ॥ ३० । पुत्रान् गुणसमायुक्तानुत्पादयितुमर्हसि । त्वत्कृतेऽहं पृथुश्रोणि गच्छेयं पुत्रिणां गतिम् ॥ ३१ ॥ वैशम्पायन उवाच । एवमुक्ता ततः कुन्ती पाण्डुं परपुरञ्जयम् । प्रत्युवाच वरारोहा भर्तुः प्रियहितेरता ॥ ३२ ॥ पितृवेश्मन्यहं बाला नियुक्ताऽतिथिपूजने । उग्रं पर्यचरं तत्र ब्राह्मणं शंसितव्रतम् ॥ ३३ ॥ निगूढनिश्चयं धर्मे यं तं दुर्वाससं विदुः । तमहं शंसितात्मानं सर्वयत्नैरतोषयम् ॥ ३४ ॥ स मेऽभिचारसंयुक्तमाचष्ट भगवानृषिः । मन्त्रं त्विमं च मे प्रादाद्ब्रवीचैवमामिदम् ॥ ३५ ॥ यं यं देवं त्वमेतेन मन्त्रेणावाहयिष्यसि । अकामो वा सकामो वा वशं ते समुपैष्यति ॥ ३६ ॥ तस्य तस्य प्रसादात्ते राज्ञि पुत्रो भविष्यति । इत्युक्तोऽहं तदा तेन पितृवेश्मनि भारत ॥ ३७ ॥ ब्राह्मणस्य वचस्तथ्यं तस्य कालोऽयमागतः । अनुज्ञाता त्वया देवमाह्वयेयमहं नृप ॥ ३८ ॥ तेन मन्त्रेण राजर्षे यथा स्यान्नौ प्रजा हिता । आवाहयामि कं देवं ब्रूहि सत्यवतांवर । त्वन्नोनुज्ञाप्रतीक्षां मां विद्ध्यस्मिन्कर्मणि स्थिताम् ॥ ३९ ॥ पाण्डुरुवाच ॥ अथैव त्वं वरारोहे प्रयतस्व यथाविधि ॥ धर्मं मावाहय शुभे स हि लोकेषु पुण्यभाक् ॥ ४० ॥ अधर्मेण न नो धर्मः संयुज्यति कथंचन । लोकश्चार्यं वरारोहे धर्मोऽयमिति मन्यते ॥ ४१ ॥ धार्मिकश्च कुरूणां स भविष्यति न संशयः । धर्मेण चापि दत्तस्य नाधर्मे रंस्यते मनः ॥ ४२ ॥ तस्माद्धर्मं पुरस्कृत्य नियता त्वं शुचिस्मिते । उपचाराभिचाराभ्यां धर्ममावाहयस्व वै ॥ ४३ ॥ वैशम्पायन उवाच ॥ सा तथोक्ता तथेत्युक्त्वा तेन भर्त्रा वराङ्गना । अभिवाद्याभ्यनुज्ञाता प्रदक्षिणमवर्तत ॥ ४४ ॥ इति श्रीमहाभारते आदिपर्वणि सम्भवपर्वणि कुन्तीपुत्रोत्पत्त्यनुज्ञाने द्वाविंशत्यधिकशततमोऽध्यायः ॥ १२२ ॥

Dr. J. Muir translates six out of the forty-four verses given above in the note (see his Sanskrit Texts, vol. II. pp. 333—334, 1st Ed., as an indication of the morals of the people). Mr. Mayne (Hindu Law and Usage, p. 54) thinks the passages quoted by Dr. Muir prove looseness of manners rather than polyandry. To me the whole chapter shows that the Northern Kurus were then what the Nairs in Malabar are now; so that a man did not know his own father. Pandu tells his wife the story related in the above chapter, and seemingly suggests, by way of comparison, that the *niyoga* connection he is advising her to submit to, is not so bad as what was once current: and that she ought therefore to listen to him.[1]

I am aware that the connection of *Súryá* (the daughter of the sun) with the twin-gods (Aśvins) is advanced as an argument for the existence of polyandry in the Vedic age. It is not certain which Súryá it was; for another Súryá (also mentioned in connection with the Aśvins) is definitively spoken of as given in marriage to Soma, as shown in the Aitareya Bráhmaṇa. The original Ṛig-veda verses which I have examined, are often doubtful, and sometimes figurative. At any rate, seeing that when the Vedas were compiled, the marriage-rite as it now exists, as shown further on, was fully established, any such stray verses may be the remains of old traditions of loose connections, or, as is more probable, they are used in a figurative sense.[2]

I am sorry I cannot understand another example quoted by Mr. Mayne from Wheeler's History of India (vol II., p. 502) on the question of polyandry. Mr. Wheeler himself at p. 502 refers to p. 241 of the same volume; but on going over the original of the passage supposed to be translated from the Rámáyaṇa, (*Araṇya Káṇḍa, Adhyáyas* 2—4, leaves 2—6) there is no such expression as "Give up your joint wife," (p. 242) as the historian makes use of in his work to support his theory of polyandry. I have also read over the whole story of *Virádha* to which Mr. Wheeler refers, in the Adhyátma Rámáyaṇa (*Araṇya Káṇḍa*, ch. i., vv. 17—46; leaves 2—3), but that too does not contain such a passage. The notice of the verses about Sáryá and the Aśvins I have already mentioned above; and that at the best is very doubtful, if not positively well explained. I think such facts as influence the history and laws of a people in important matters ought to be more correctly ascertained by those who, like Mr. Wheeler, seem to have

[1] See Adhyáya V. pp. 78—87, Vidhavá-viváhakhaṇḍaṇa, by Balkrishna L. Shastri Bápat, Bombay, 1865.

[2] See Mayne's Hindu Law and Usage p. 52, and Muir's Sanskrit Texts, vol. V., pp. 234—243, where the subject is discussed in all its bearings. Aitareya Bráhmaṇa Pañchiká IV., Khaṇḍas 7—9, Dr. Haug's Translation, vol. II., pp. 269 to 274, where Soma's marriage with Súryá is described.

no access to the original. So much for polyandry and promiscuous intercourse in that age.

As I said above, since we have had the Vedas in their present form we have the institution of marriage settled, as we find it now. Whether it was polygamy or monogamy, which first prevailed, may be difficult to ascertain. But from texts given below,[1] monogamy would appear to have been at one time the rule, to which polygamy was the exception.

Dr. John Muir supports the monogamic theory by citing Vedic texts,[2] showing that the word 'husband' is there connected with the words *patní* or *jáyá* (wife) in the singular. But this is not in my view a secure basis on which to ground such a proposition; for in the texts which he himself quotes further on in the same volume (see pp. 457, 458), the same words occur in the plural—namely, *patnyah* (wives), and *sa-patnyah* (co-wives). On the other hand, the word *dampati*, being always dual in number, denotes, as I said before, the existence of monogamy.[3] And although polygamy is now legal by usage, still if a person has to invite a *dampatí* (husband and wife) for a religious purpose, he will invite only a man who has married one wife and who is living. In many parts of the country, a man marrying a second or a third wife will not be ordinarily invited with his subsequent wives to join particular ceremonies; thus he will not be allowed to hold the *antahpaṭa* (the cloth suspended between the bride and bridegroom at the time of marriage); nor will his second wife—whose marriage is regularly the first marriage, (and is held to be quite right and proper,) be allowed to participate in various customary auspicious ceremonies, although she will be otherwise treated as a *suvásini*, or a married woman whose husband is living. The *punarbhú* (or the remarried female) is unknown to strict Hindu law,—but custom, as I shall show hereafter, has admitted her into the community amongst various lower classes, and the Indian Legislature

[1] Rig-veda II., 39, 2, X. 9, 5; 68, 2; 95, 12.

प्रातर्यावाणा रथ्येवेवीराजेव यमा वरमा संचेथे ॥ मेमे इव
न्वाइं शुभ्माने दंपतीव क्रतुविदा जनेषु ॥ (मं. २ सू. ३९ ऋ. २)
भिं नुनौ जनिता दंपती कर्देवस्त्वष्टा सविता विश्वरूपः ॥ नकिरस्य
प्रमिनंति व्रतानि वेद नावस्य पृथिवी उतद्यौः ॥ (मं. १० सू. ९ ऋ. ५)
सं गोभिरांगिरसो नक्षमाणो भगं इवेदर्यमणं निनाय ॥ जनोमित्रो
न दंपती अनक्ति बृहस्पते वाजयाशूँ रिवाजौ ॥ (मं. १० सू. ६८ ऋ. २)
कदासूनुः पितरं जात इच्छाच क्रन्नाशुं वर्तयद्विजानन् ॥ को दंपती
समनसा वि यूयोदध यदग्निः श्वशुरेषु दीदयत् ॥ (मं. १० सू. ९५ ऋ. १२)

[2] See his Sanskrit texts, vol. V., p. 457.

[3] See the above Rig-veda Texts (note 1); Amara-Kośa, Book II. varga 6, v. 38, p. 140, Bom. Ed.

has legalized a second marriage by a widow throughout all classes and castes.

While the occurrence of the word *dampatí* throughout the Vedas clearly supports monogamy, other texts support the sacredness of the marriage tie. Thus the pair is compared to the Aśvins (the twin-medical deities) in the Vedas.[1] The word *Aśvinau* is always in the dual, and the two are known as inseparable. Such passages would suggest that marriage was even then looked upon as an indissoluble transaction, which, when completed by *Saptapadí* and the *Viváha homa*, it continues to be to this day, except where usage has laid down a mode of divorce, held binding by the castes to which the parties belong. Where there is no *Saptapadí* and no *Viváha homa*, it is not correct to call the marriage as one celebrated according to the text law at all. It must be regulated by caste customs alone.

Although the existence of more than one wife is recognised by the Vedas,[2] it seems that such a custom was looked upon with disfavor; for there is no *one* word signifying a husband with many wives, corresponding with *dampatí* (a man and his wife) which occurs so frequently.

A few more Vedic facts are useful, and may be here noted. Thus is the admission in the *Aitareya Bráhmaṇa*, that a man may have more than one wife; but one wife cannot have more than one husband at one time.[3] The word is *Sahapatayah* (rival husbands). Along with this, however, appears the unequivocal position of the wife as a *Sakhá* (friend).[4] This appears to have been preserved at the time of the Mahábhárata (*Vanaparva Adhyáya* 313, v. 64, l. 307 p. 2). Again, it is generally taken for granted that when a man becomes a widower, he must marry again, as he cannot sacrifice in a single state. This is not correct. Even now there is a *vidhura vidhána* (ceremonial for a

[1] Rig-veda II. 39, 2—(Max Müller's edition vol. II. p. 609).

[2] Prof. Max Müller's Edition of the Rig-veda X., 33, 2 (vol. V. p. 546); X., 43, 1 (vol. V. p. 592); VII., 26, 3 (vol. IV. p. 21); White Yajurveda Śatapatha Bráhmaṇa IX, 1, 4, 6.

[3] Aitareya Bráhmaṇa III. 2, 23. "तस्मादेकस्य बह्वो जाया भवन्ति नैकस्यै बहवः सहपतयः." ऐ. ब्रा. पं ३ अ. २ खं. २३ (Dr. Haug's Aitareya Bráhmaṇa, vol. I. p. 68, and vol. II. p. 197).

[4] Aitareya Bráh. VII. 3, 13 :—

"अन्नं ह प्राणः शरणं ह वासो रूपं हिरण्यं पशवो विवाहः; सखा ह जाया कृपणं ह दुहिता ज्योतिर्ह पुत्रः परमे व्योमन्. पतिर्जायां प्रविशति गर्भो भूत्वा स मातरं; तस्यां पुनर्नवो भूत्वा दशमे मासि जायते. तज्जाया जाया भवति यदस्यां जायते पुनः।"

(Haug's Aitareya Bráhmaṇa, vol. I., pp. 178, 179, and vol. II., pp. 461, 462.)

See Áśvaláyana Gṛihya Sútra, 1, 7, 19, of which the *Mantra* used in walking over the seventh step ( सखा सप्तपदी भव | ) forms a part: page 33 Calcutta ed. In like manner Ápastamba speaks of the wife's *Sahatvam* (companionship) by placing her *along with* the husband, which seems to preclude the idea of a subordinate position: (2, 6, 14, 16, to 18) vol. I. p. 73, and Commentary, vol. II. p. 84.

widower). In this respect also the Aitareya Bráhmaṇa is specific.[1] I will have to refer to this hereafter.

As regards marriage customs much cannot be directly gathered from the Vedas. But the following summary would represent the practices as therein recorded so far as they can be made out.

It would appear from the Vedas that in that age females were sometimes allowed to choose their husbands[2]; that the question of preference among competing suitors was at times determined by the winning of a certain stake;[3] that on marriage the bride went over to the house of the bridegroom;[4] that certain clothes worn by the bride had to be given away;[5] that presents of money had to be made on the occasion of the giving away of her clothes as mentioned above;[6] that grasping of the hand was one of the rites connected with the marriage ceremony[7]; that *Agni* (fire) was requested to give long life and success to the bridegroom along with the bride;[8] that Indra and Prajápati were invoked to bestow unswerving affection, progeny, and good character on the bride[9]; and that a joint prayer by the couple was offered to the Visvedevas for the mutual enlightenment and devotion of their hearts[10]; and that all these things were done before a sacrificial fire kindled for the occasion. It would thus appear that the rite was a simple one, and free from the symbolism which now prevails.

As the early Áryas, like their descendants, have always provided texts for the minutest details as far as they went, it may be inferred from the texts above given that the Vedic marriage ritual was very simple, and did not include anything beyond what we find laid down. If we had had any other Vedic *Prayogas* (rituals) prior to the Sútras, they are not now accessible, and may be treated as non-existent for all practical purposes.

---

[1] Aitareya Bráhmaṇa. VII. 2, 10:—"तदाहुर्वीचाऽपत्नीकोऽग्निहोत्रं कथमेव जुहोति निविष्टे मृता पत्नी; नष्टा वाग्निहोत्रं कथमग्निहोत्रं जुहोति? पुत्रान्पौत्रान्नप्तॄनित्याहुरस्मिंश्च लोकेऽमुष्मिंश्चास्मिन् लोकेऽयं स्वर्गेस्वर्गेण स्वर्गं लोकमारुरोहेत्यमुष्यैव लोकस्य सन्तति धारयति यस्यैषा पत्नी नैच्छेत्तस्मादपत्नीकस्याधानं कुर्वन्त्यपत्नीकोऽग्निहोत्रं कथमग्निहोत्रं जुहोति। श्रद्धा पत्नी सत्यं यजमानः श्रद्धा सत्यं तदित्युत्तमं मिथुनं; श्रद्धया सत्येन मिथुनेन स्वर्गाल्लोकाञ्जयन्तीति।" ऐ. ब्रा. पं. ७. अ. २ खं. १० Haug's Aitareya Bráhmaṇa, vol. I. pp. 176-7; vol. II. pp. 456-7.

[2] Rig-veda Samhitá X. 27, 11 and 12 (vol. VI. p. 509. Prof. Max Müller's edition).

[3] Rig-veda Samhitá I. 116, 17 (Prof. Max Müller's edition, vol. I. p. 931).

[4] Rig-veda Samhitá X. 85, 26 (Prof. Max Müller's edition, vol. VI. p. 198.)

[5] Rig-veda Samhitá X. 85, 29 and 30 and 34, (vol. VI. pp. 199, 200 and 201). Instead of this, the followers of the Black Yajurveda perform according to the Satyáshádha Sútra what is known as the *Cháturthika Karman*.

[6] Rig-veda Samhitá X. 85, 29 (vol. VI. p. 199).

[7] Rig-veda Samhitá X. 85, 36 (vol. VI. p. 202). Taittiríya Satyáshádha Grihya Sútra ch. i.

[8] Rig-veda Samhitá X. 85, 38 and 39 (vol. VI. p. 203).

[9] Rig-veda Samhitá X. 85, 43 and 45 (vol. VI. p. 205). Satyáshádha Sútra ch. i.

[10] Rig-veda Samhitá X. 185, 47 (vol. VI. p. 206).

This much may be at once stated, that neither the Ṛig-veda hymns, nor the *Mantra* portion of the other Vedas, furnish materials for the complete marriage ceremonial as it now exists, and to which I have now to invite attention. Various changes upon the Vedic texts have been gradually introduced by custom. These in their first stage of innovation are evidenced by the Gṛihya Sútras of the different *Śákhás* (branches). These Sútras again show that the marriage customs, even in those early days, had undergone a considerable change, and also that they contemplated further modifications according to the usages of castes and countries. I shall therefore now begin with the Sútra ceremonial for celebrating marriages, adding the present rites thereto. The Sútra is the first stage next after the *Mantra* period; and it is the basis of the present ceremonies.

The Áryas profess to be guided by their own respective Sútras; but they go on adding almost unconsciously on every conceivable occasion. So that the so-called present Sútra ceremonial is a mixture; and as such it will here be given. According to this, the marriage ceremony now performed among the twice-born classes, consists of 27 principal observances.[1] Of these four are founded on the *Gṛihya*, twelve on the *Gṛihya Parišishṭa*, and the rest derive their authority from custom alone.

The list above given will show to even a casual observer that a considerable advance in minute details has been made upon the Vedic rite. I have intentionally left out minor observances. The purely Sútra rites are very few. To these are added the Parišishṭa rites, and these

[1] They are as follows :—(1) *Vágdána* (betrothal); (2) *Maṇḍapakaraṇa* (the erection of the pavilion); (3) *Puṇyáhaváchana* (a declaration of the auspiciousness of the day); (4) The procession of the bridegroom to the house of the bride; (5) *Madhuparka* (offering welcome to the bridegroom); (6) *Vishṭaradána* (the offering a seat); (7) *Gauriharapújá* (worship of Śiva and his consort); (8) *Jalaśuddhi* (the consecration of water for giving the bride); (9) *Kanyádána* (the gift of the bride); (10) *Akshatáropaṇa* (the throwing of rice); (11) *Kaṅkaṇabandhana* (the tying of the bracelet); (12) *Ardrakshatáropaṇa* (the laying of wet rice); (13) *Tilaka Karaṇa* and *Málábandhana* (the marking of a spot on the heads and the tying of necklaces of the bride and the bridegroom); (14) *Ashṭa putridána* (the gift of the clothes of the bride); (15) *Mangala Sútra bandhana* (the tying of the auspicious thread round the neck of the bride); (16) *Gaṇapati pújána* (the worship of Gaṇapati); (17) *Uttaríya práṇta bandhana* (the tying of the ends of the garments worn by the pair); (18) *Akshatá ropaṇa* (the throwing of rice on the heads of the pair by the people assembled); (19) *Śachyadi pújána* (the worship of Lakshmí, Párvatí, and Śachí); (20) *Váyanadána* (the gift of auspicious things); (21) *Viváha homa* (the marital sacrifice); (22) *Saptapadi kramaṇa* (the walking of seven steps); (23) *Gṛiha praveśaniya homa* (the sacrifice on entering the bridegroom's house); (24) *Airiṇidána* (the gift of a bamboo framework with lamps burning); (25) the making over of the bride to the parents of the bridegroom; (26) *Devako tthápana* and *maṇḍapodvásaṇa* (dismissing the Devatas that were invoked at the beginning of the ceremony; and the pulling down of the pavilion); and (27) *Gṛiha praveśa* (entry of the bride into the bridegroom's house).

latter are accounted equal to the first, and are held to belong to the Sútra class. The remainder are customary, and these are again supplemented by many more, which I have not detailed here. Astrology, which came to the front in later times, now forms an integral part of the authorities governing marriages. The astrological provisions are set aside by a large number without practical inconvenience and with perfect impunity. A few, however, will seek their aid; and in such a case the auspicious and inauspicious signs and ceremonies play a very important part. These affect chiefly in reference to the stars ruling at the birth of the parties; to the changes of planets; to the comparison of the twelve signs of the zodiac; to the parties' names; to the seasons of marriages; to preparatory sacrifices, &c. &c. As a specimen of good and bad signs, and their attendant ceremonies, I give one example. If the bride, while on her way to her new home, cries, it is a bad omen; but the ritual provides a ready cure. A symbolical *mantra* is recited, and the evil is allayed. This is a fair sample of the symbolism which now rules some branches of the Hindu ceremonial, even independently of astrological considerations.

The above, as I have said before, is the ceremonial laid down for the higher classes. It is based on Áśvaláyana Grihya Sútra, and Náráyaṇabhaṭṭa has summarized it with all subsequent modifications in his work called Prayogaratna, which is a current work, and is the groundwork of my summary. But even here there is a very wide interval between theory and practice. There are places where hardly a qualified Bráhmaṇa priest is obtainable, and parties have to improvise a ceremonial for themselves. This is done by distributing *pan-supári*, worshipping the household deities and the ceremonial *pothi* (book) containing the ritual. In the nature of things it cannot be otherwise; for although Náráyaṇabhaṭṭa wrote for all the three higher classes, all of them are not now to be met with in the state predicated of them by Manu and others. I would not now enter into the vexed question of classes. But even taking the Bráhmaṇas as representing the three higher classes, statistics and daily experience show that thousands of Bráhmaṇás are only so in name.[1] To them the Vedas are a sealed letter. In such a case, whatever the theoretical ritual may be, its performance depends on the state of the people, and on their local and class usages. Indeed, this seems to have been present before the minds of the different treatise-writers themselves; for they distinctly base all the marriage ceremonial on custom. Thus in the Prayogaratna itself, Náráyaṇabhaṭṭa states the fact as follows, giving the Grihya Sútra as his authority:—

"प्रयोगपारिजाते तु गृह्यपरिशिष्टानुसारेण कन्यादानतत्प्रतिग्रहजवनिकापूर्वकमन्त्रवन्निरीक्षणा-

[1] Mahábhárata Vanaparva, A. 179, vv. 19—36, leaves 178, 179 p. 1; Hunter's Orissa, vol. I. p. 238; the same, *mutatis mutandis*, is true of nearly all other provinces.

क्षतारोपणदास्यादिदानपुरोधःकर्तृकाभिषेकपरस्परक्षीरघृततिलककरणमालारोपणपूर्वसम्पादितकौतुकसूत्रबन्धनगणपतिपूजनकसुकबन्धनादीत्ययमनुष्ठानक्रम उक्तः स च देशाचारवशेनानुसर्तव्यः ।

अथ खलूच्चावचा जनपदधर्मा ग्रामधर्माश्च तान्विवाहे प्रतीयादिति सूत्रतः पदार्थस्वरूप इव तत्क्रमेऽपि समत्वादेशाचारप्रामाण्यस्येति दिक्. (Leaf 72.)

The Dharmasindhu (parichchheda iii., 1st half, l. 50 p. 2 lines 2—4) comes to the same conclusion. Thus, while discussing the question whether in the matter of marriage, the limits of *sapiṇḍa* relationship laid down by Yájñavalkya in ch. i. v. 53 (see above Part II. p. 168 ll. 2 and 3) may not sometimes be further circumscribed, the author speaks as follows:—

"जनपदधर्मा ग्रामधर्माश्च तान्विवाहे प्रतीयात् । येनास्य पितरो याता येन याताः पितामहाः । तेन यायात् सतां मार्गं तेन गच्छन्न दुष्यति इत्यादिवाक्यैः स्वकुलदेशाचाराविरुद्धस्यैव शास्त्रस्य विवाहेऽनुसर्तव्यत्वात्."

Translation:—For, in respect of marriage, those texts *alone* are to be followed, which are not opposed to the usages of one's family or country in accordance with the following among other texts:—'The usages of the country should be followed in marriages' (see Áśvaláyana Gṛihya Sútra I., 7, 1, p. 25), and 'that path of the virtuous should be followed by which one's father and forefathers have gone. No sin will arise out of such following.' [A text of Vyása.]

The Samskárakaustubha has likewise admitted the supremacy of custom on this subject; for after giving the ritual as deduced from texts, the author says (see l. 221 p. 1 line 8): —एवंसत्यपि सकलग्रन्थाननादृत्याचारानुसरणमेवेच्छतां परितोषाय यथाचारमपि प्रयोगो लिख्यते. Translation: 'Although it is so, I now write the ritual adopted by custom for the gratification of those who wish adherence to the custom in defiance of all treatises [on the subject].' It is true this passage shows the author not to be favourably inclined to the advocacy of custom as against express texts. But I take this circumstance as strongly proving the general prevalence of the customary law against express texts, for it is not at all likely that the author with his dislike for the ritual he lays down, would have cared to do so, and thereby to give it some sanction, if the followers of such a ritual had been in a small minority. The truth probably was, that the author was aware that the ritual already laid down by him according to his notion of the veneration for texts was not likely to be accepted by the lay public. Indeed, such is now actually the case. For the old ceremonial has, in a great measure, been superseded by the new customary one.

From what Kamalákara says before prescribing the *Punyáhaváchana* ritual for Śúdras, (viz., तत्रादौ कर्माङ्गत्वात्पुण्याहवचनमाचारानुसारेणोच्यते) it appears that he had also consulted the practices of the Śúdras before writing his work, and wrote according to what he had observed (see his Śúdra Kamalákara l, 19, p. 1, line 1). But his work itself is now almost out of use. Each caste has its own ceremonial; and now while in some Śúdra

castes the tendency is more and more to imitate the twice-born classes, in others it is to give up as much of the old ceremonial as possible.

The above authorities are, it seems to me, decisive. And they are consistent with what also appears clearly from the purely ancient writers themselves, namely, that the marriages of the Áryas were always regulated by caste, family, country, and village customs.

It is curious to read some of the accounts in the English books. These were probably composed either from second-hand information or from obsolete *prayoga* (ritual) writers of particular districts. Some portions of the ceremonial may agree with those now in practice, but that is simply a matter of accident. A ceremonial which lasts for days together according to the text-writers now takes place, as I know from instances within my own experience, in two or three hours. The only matters that occupy a prominent place at present are the presents, the processions, and display generally, when the parties can afford. The simplicity of the Sútras has gone away with their makers, the *Rishis*. There are cases where the new *prayoga* (ceremonial) is followed. But even there, except in very essential matters, it is considerably modified by local usage. This may be said of the highest class of Bráhmaṇas.

In other classes such a thing as a *prayoga* does not exist. A string of Puráṇic verses are repeated at intervals by a priest if one be present, and the ceremonial is conducted by the elders of the parties, particularly women, according to their own usages. Such things as Vishṇu-Sahasranáma (the one thousand names of Vishṇu), and Rámarakshá (prayer to Ráma) are often repeated. These have nothing to do with the ritual. But the parties, really speaking, do not stand in need of it. If the Joší can say when the turmeric is to be applied, or the cocoanuts and beetle-nuts to be presented to the local deities, or the flower garland to be thrown, or the thread to be wound round the pair, he serves for all practical purposes. If he is up in this mechanism, he fashions the marriage. But if he be wanting in this, no amount of *Mantras* (Vedic or Puráṇic) will do him any good.

In the Berars, one Joší (astrologer) often acts as the director of marriage ceremonies for a whole village. He sits on a terrace with his *Ghaṭiká*[1] vessel set agoing for a particular propitious hour, which he notifies previously to the whole village. All the marriage parties are supposed to be ready for the appointed time, and this is announced from the central station taken up by the astrologer, by the clapping of hands or by other appointed signals to the community. Beyond this procedure of the priest, who, I understand, often says a *Mangaláshṭaka*[2] or two on

[1] A copper vessel with a small hole at the bottom through which the water enters. This is placed in a pot of water, and the vessel is so made that it fills once in a *Ghaṭiká* or 24 minutes.

[2] A vessel blessing the married pair. Many of these are recited at ordinary marriages.

the same spot, no strictly religious ceremony is performed according to the books. But the marriages are otherwise duly solemnized by the people according to their customs and usages, and will, I have no doubt, continue to be so hereafter in the same manner.

Amongst a large class of Kuṇabis called the *Leva* and *Kaḍvá Kuṇabis* of Gujaráth,[1] the marriage season occurs at an interval of twelve years; and female children even in the cradle must be married then, or remain single for another period of twelve years, which latter circumstance is considered derogatory to family dignity. This season itself extends over one day, or at the most a few days, and these days are believed to be dictated by the *Mátáji* or the tutelary goddess of the class. This is done by sticking some rice, wheat, or flowers, after steeping them in water, at the foot of the shrine, and asking the image to allow one on the right or the left to fall. As some grains or flowers must fall, the number of allowable days are said to be thereby indicated. The result of such customs often is what may be imagined. My purpose here is not to describe the social and moral consequences of these proceedings; but to show that marriages, celebrated in a mode so utterly opposed to all received works of authority, are still common and accepted as binding on the community. For they are sanctioned by custom, and are perfectly legal.

I must add here what I should ordinarily have reserved for another place; for the picture will be otherwise incomplete. As a matter of course, many cases of widowhood occur in such a community, and although remarriage is an accepted customary institution amongst the Śúdras, the caste usage of these tribes is so peculiar, that a girl so circumstanced must repair, as it were, by stealth to the house of her future husband, and be married by nature without any ceremonial whatsoever. Similar instances occur in other parts of India: the *Dhoká* and *Dáng* marriages of Kuch-Behar[2] are nearly like the present. Such is the customary law of this large, important, and influential community in Gujaráth.[3]

[1] The Bombay Gazetteer, by J. M. Campbell, C.S., vol. IV. p. 36, (1879) gives their numbers at 123,697. My friend Ráo Bahadur Bechardas Ambáidas, C.S.I., belongs to this caste, and he has given me this account in person. The worthy Sett, who has done so much for the Ahmadabad community, wishes to try his best to reform these customs, but hitherto his efforts have failed. The only example I can find in this volume of a marriage resisted by the caste is noted at page 107; and it is a marriage with a widow. See also Bombay Government Selections, No. CXLVII., New Series, 1875, chiefly pp. 13—40.

[2] Hunter's Statistical Account of Bengal, vol. X. p. 377.

[3] "The most respectable part of the population [of Broach]," says Mr. Campbell, "and the principal cultivators of the highly tilled and fertile district of Broach are the Kuṇabis." They used formerly to seek alliances in Kaira, but owing to heavy expenses, they have now resolved "to intermarry among themselves." (Bombay Gazetteer vol. II. 1877, p. 373.) See a similar custom in the Panch Mahals, and the origin of it (Bombay Gazetteer, vol. III., p. 225).

I draw particular attention to this example. For it must be noted that this caste is one of the richest in Gujaráth. It consists of landlords, hereditary district and village officers, bankers, merchants, farmers, and artisans. One of its members, Ráo Bahadur Bechardas Ambáidass, C.S.I., who was lately one of my worthy colleagues when I was in the Council of His Excellency the Governor of Bombay for making laws—is a gentleman noted for his philanthropic deeds. He has done his best to bring about a reform, and the Government themselves have acknowledged his services. But so deep-seated is the power of custom, that it has defied all the Ṛishis and Vedas, and will do so, until the moral and religious growth of that class of the community begins from within. I cite this instance to show that it is not to insignificance in rank or wealth, that the existence of these customs is due; but that they arise independently, and follow their own laws.

With a view to bringing within a short compass some of the curious marriage customs in different parts of India, I have thrown them into a short summary at the end of this Section. Where there is no published authority, I have indicated my source of information. Where such is not given, the statements rest on my own enquiries. The summary gives a variety of cases; but it can be lengthened by further enquiry and researches. The customary ceremonial is as diversified as the countries and peoples in India. In outlying districts like Sindh and such other places, there is often not even the semblance of a priest. Amongst other tribes the priest serves a barely secular purpose. In others—notably amongst a sect of Kolis along the coast—it was customary at one time to strip the priest naked, so as to excite laughter; and a marriage was not reckoned quite auspicious if the victim of popular ridicule eluded the grasp. Again, where as amongst the Mánbháus, the mere tying together of the wallets of the man and woman constitute marriage, the element of text laws entering into the transaction is nil: custom rules everything.

I now pass on to the supersession of the traditionary old law in specific instances. According to the Smriti law, a man may marry as many wives at any one time as he pleases.[1] Usage still sanctions such connections. Manu contemplates polygamy as an exception.[2] Usage however has converted this exception into an ordinary practice, which however has not entered into some castes. Thus in the Vadanagara Nágar caste, I understand a man cannot marry a second wife if his first be living. If he does, social excommunication follows, and so far as his caste is concerned, he is civilly dead.

[1] Aitareya Bráhmaṇa, III., 23, Haug's Translation, vol. II., p. 197. Tarttiríya Krishṇa Yajuh Sanhitá, 6th Káṇḍa, 6th Adhyáya, 4th Anuváka, यदेकस्मिन्यूपे द्वे रशने परिव्ययति तस्मादेको द्वे जाये विन्दते ॥ (MS.)

[2] Manu, ch. ix. vv. 77—83.

By another caste usage it appears that in the case of a husband taking to himself another wife, his first wife can obtain a divorce from him, which, according to the text-writers, can never be done. I give below the report of a very curious case in the Gándharva caste in Gujarath on this question from 2 Borrodaile's Reports pp. 524-528.[1]

[1] No. 100.

Muhashunkur Khooshal ..... *Appellant,*

*versus*

His wife Mt. Oottum, and others..... *Respondent.*

Ahmadabad Udalut.
Dr. Greenhall, Register.
Gundhuhrou caste.

Claim by a wife for a divorce from her husband or repudiation of his second wife. Divorce granted.

The action was laid on the 15th June 1822 in the Ahmadabad Court by Respondent Oottum, daughter of Girdhar, and her guardians being her mother Narbhee and Dirkásánka her father's *brother*, suing her husband, Appellant, in damages Rs. 800, to obtain divorce from him. It was stated in the plaint that after the marriage had been celebrated, Appellant contracted Natra (1) about seven months ago with another woman, and brought her into his house. He complained on the criminal side against Respondent for not entering his house, and on the trial Respondent was ordered to cohabit with Appellant. It was to obtain relief from this order, that she now sued, praying the Court either to grant a divorce if Appellant persisted in adhering to his second marriage, or to oblige him to repudiate the second wife, since it was a positive rule in their caste (the Gundhurou or musicians and singers) that no man should marry a second wife during the life of his first unless she were barren, or blind, or had other material defect, and that he must repudiate one or the other, since bigamy was not permitted in their caste. Respondent said that Appellant was also under excommunication by the caste for this offence, but if he chose to take home her, his lawful wife, and to repudiate the other, and could get re-admitted to caste, she would enter his house, but not otherwise.

Appellant did not deny the fact of having married a second wife, but pleaded that the investigation on the criminal side was decided on the Vyavustha of the Shastree, and was a bar to the present action. The order passed on that occasion was that he should allow Respondent, his lawful wife, to reside in his house, and keep the second *wife* in a separate lodging. He was ready to obey this injunction, but pleaded that he could not be obliged to repudiate the second wife, as Natra was permitted in their caste.

Respondent replied that the custom of country and of caste was paramount at all times to the Shastra, and the Court would find that the custom was in her favour.

Appellant rejoined that he could produce examples of second marriages in this caste, and that Respondent's only claim lay against him for maintenance in case he neglected to give it. His claim against the caste was foreign to the subject at issue, and ought not to have been introduced by Respondent in her pleadings.

The Court asked the Hindu Law Officers, if any person should without good and sufficient cause take a second *wife* for his own pleasure, whether he could keep both the first and second wife in his house or not.

The Shastrees said: In the First Book of the Yájñavalkya Smṛitee (the Mitákshará) in the first line of the second page of the 9th leaf, on the reasons for a man's second marriage, are these words: "When a wife is either drunken, long diseased, mischievous, barren, expensive, abusive or bears only daughters, let her be superseded by another; also if she be inimical to her husband. (The commentary declares the word "drunken" to apply "even to the wife of a Shoodr, for the half of his body, whose wife drinks, becomes impure, wherefore to all alike it is forbidden"; the phrase "let her be superseded by another" to signify the taking of another *wife*.) Eight reasons for marrying a second wife are laid down, but where not even one of these reasons exists,

I quote the entire report, as it throws considerable light on caste privileges.

the taking of a second *wife*, by the laws of the Shastra, is not proper. Again, should it be done, it appears from the Shastra, in the same line, that even then the first wife must be maintained, for on failure of that, to him will be a great sin. So that even if he take a second *wife*, the wife who first received his hand must be made glad continually with presents, honor and proper acts, &c. and be taken care of; should he fail to do it, a great sin is denounced against him the husband and against the prince. (2) In the present case this person having one wife alive, and without any of the eight above-mentioned reasons existing for a second wife having taken another wife, has acted improperly, but since he has made a second marriage, let him constantly please his first wife in the manner laid down in the Shastra.

Respondent urged that the Shastra did not apply to their caste, who would all declare the rules to be against having two wives.

The Court determined to summon the whole caste, of which there were only twenty-four more members. Three of these were under expulsion; the fourth was not in a fit state to appear in Court. Of the remaining twenty, nineteen declared on oath, that if there were cause, a man might keep two wives, but not so if no reason existed for doing it. If both the wives agreed, he might keep them both, if not, the husband must grant a divorce (Farigh khat) to the dissentient one. Natra was practised in their caste.

The twentieth and last deposed that the custom of the caste permitted a man to have two wives; if either of them did not agree to live with the other, still the husband might keep them both, unless he chose of his own accord to let one separate, but he might not grant her a divorce (Farigh khat). Appellant was the son of this witness's maternal first cousin.

The Court, on the general expression of the caste, decided that Respondent was entitled to a divorce unless Appellant should comply with the terms required by the caste, and he, being called on by the Court to state what steps he would pursue, replied that he would not grant a divorce to either.

The Court therefore declared a divorce between the parties husband and wife, and gave Respondent full power to act in every respect the same as if no contract had been made with the Appellant, who was to pay costs of suit.

When the suit came on for hearing Appeal, it appeared that Appellant was now willing to put away his second wife, but as the caste had taken up the matter, and expelled the Appellant for his conduct in the business, it became necessary to allow him time to satisfy the caste, by proceeding to the formal repudiation of his second wife, and recovery of his privileges of caste. For it was understood that this his first wife, Respondent, in that case would waive any right to a divorce under the decree, and would consent to the re-establishment of conjugal rights and duties between them. The case was therefore laid over for a month. At the expiration of the time, Appellant's Vakil informed the Court that his client had a Farigh khat to his second wife, but had not been able to obtain re-admission to caste, as many of the members were absent from Ahmadabad. Respondent's Vakil represented that no intimation of the Farigh khat had been received by Respondent, and that there was a sufficient number of members of the caste present at Ahmadabad to absolve Appellant from his excommunication if he had sincerely wished to settle the dispute, wherefore he payed the Court for judgment.

Decree 5th September 1822 Sudur Udalut, sitting Judge J. Romer, Chief Judge.

The sitting Judge held that further time ought not to be granted, since Respondent was averse to it, and on the grounds shown in the proceedings by which the usage of divorce in the caste of the parties had been proved, the judgment of the Register was affirmed against Appellant.

I now proceed to note in what manner the text-law has been broken through. I must at once state here that my statements are not exhaustive, but rather indicative of what has taken place, and of what is going on. Marriage amongst the Áryas, whether it takes place according to one of the eight traditional forms, or according to mere popular usage, is a customary religious ceremony. When once celebrated, it cannot be dissolved, even if it has been irregularly performed. In cases where the *Saptapadi* and *viváhahoma* are completed, it is an unalterable transaction.[1] It may be that the caste may have voted against performing it, because in their view the girl should have been bestowed on another. The mother may have done it in defiance of the father; but if it has been duly solemnized, it can never be set aside. This is a caste question, and since the passing of Bombay Reg. II. of 1827 ch. I. sec. 21 clause 1st, it cannot directly form the subject of a civil action. Even when marriage questions did once come into Courts, our tribunals as a rule consulted each caste, and regulated their decisions according to their received usages.[2]

I now propose to describe the restrictions imposed on Árya marriages and their removal.

---

[1] Bellasis' Bombay Sadr Diwáni Reports, p 43.

[2] This is very amply illustrated by the case of Krishnee in Borrodaile's Reports, vol. 2, pp. 138-40, of which I give a short abstract. This was a suit for enforcing celebration of a marriage agreed upon between Respondent and Appellant Krishnee, which the other appellants, uncles of Krishnee, wished to set aside. The matter was referred by the Zillah Judge to the caste, and the majority being in favour of celebrating marriage, a decree was given in respondent's favour, and affirmed by the courts of Appeal and the Sadr Adalut.

But all these decrees availed nothing. The girl Krishnee persisted in her refusal, and her uncle preferred to pay the penalty entered into in the Zilla Court. The rest is thus reported :—" The Sadr Adalut consulted its Law Officer, under date 19th May, how a mungnee pronounced valid by the majority of a caste, and confirmed by the Courts of Justice, but to which the woman to be betrothed refused to conform, by denying consummation to the husband, and attempting to marry with another, is to be enforced? He replied, " a mungnee pronounced valid by the caste cannot be set aside, and the woman on refusal to celebrate the marriage should be compelled by the caste in whatever manner they think proper to consummate it, and orders should be given to the caste for the purpose. For Bruhasputee ordains that the sovereign shall cause all religious rites to be observed as they have been of old, respecting country, caste, and people." (1) Before the Vyaoustha was given, even the marriage of Krishnee with Motee Joitah was clandestinely celebrated by appellants on the 29th April, and the caste having been examined, declared this last marriage legal, so the Sadr Adalut left respondent to seek redress if he chose, letting him find out the proper course for himself; he had already received the damages sued for, Rs. 1,183 and all costs, and the amount of the penalty bonds Rs. 2,000, was carried as a fine to account of Government."

See further in regard to caste-questions *Narotum Bhagvan* v. *Mithálál Káhándás and* 42 *others*, Printed Judgments of Bom. H. C. for 1878, page 235.

The Vedas are apparently silent as regards the restrictions now imposed. Áśvaláyana recommends the *Kula* (family) of the girl to be examined on the father's and mother's side, in order to see (so says the commentator), that they have not committed any of the *Mahápátakas* (great sins), and have not had any taint of *apasmára* (epilepsy), &c. Further, the girl should be qualified by her talents, beauty, and disposition, and be free from disease.[1] In the Grihya Parisishta[2] the field of selection is more restricted. The *sapiṇḍa* and *sagotraja* are not to be married, so also one of a *Viruddha-sambandhá* (of contrary connection). The whole however is governed by a passage in the text directing the observance of the usages of the peoples and villages in marriages.[3]

Other Smriti texts as given below seem to bear on this subject. Manu[4] omits the *pravara* altogether, nor does Kullúka incorporate it in

---

[1] Áśvaláyana Grihya Śútra, I., 5, 1–4; page 22, Calcutta ed.

[2] Áśvaláyana Grihya Śútra, p. 284, Cal. ed.

[3] See Grihya Śútra of Áśvaláyana i. 7, 1 (p. 25 Cal. ed.)

[4] Manu III., 4 and 5:—

गुरुणानुमतः स्नात्वा समावृत्तो यथाविधि ।
उद्वहेत द्विजो भार्यां सवर्णां लक्षणान्विताम् ॥
असपिण्डा च या मातुरसगोत्रा च या पितुः ।
सा प्रशस्ता द्विजातीनां दारकर्मणि मैथुने ॥

Sir William Jones's translation (Grady's edition p. 40) runs thus:—

4. Let the twice-born having obtained the consent of his venerable guide, and having performed his ablution with stated ceremonies, on his return home, as the law directs espouse a wife of the same class with himself and endued with the marks of excellence.

5. She who is not descended from his *paternal* or *maternal* ancestors within the sixth degree, and who is not *known by her family name to be* of the same primitive stock with his father *or mother*, is eligible by a twice-born man for nuptials and holy union.

N. B.—This description of the sapiṇḍa relationship does not accord with that of Yájñavalkya, in respect of the mother's side, where it extends only to the fourth degree instead of the sixth, see above Yáj. ch. i. v. 52, (p. 168 l. 2).

The words 'within the sixth degree,' although not italicized, appear to have been incorporated into the translation from the gloss of Kullúka. But it seems to me that Kullúka is not quite accurate here; for he mentions the seven degrees of relationship from a verse from Manu ch. v., v. 60, which refers to impurity on account of death, and his comment thereon shows that on that account he had in his mind the *sapiṇḍas* on the father's side through males only (see Manu l. 86 p. 1).

It has also to be noted that the restriction of the *gotra* of the maternal grandfather, mentioned in the above translation, is now confined to the followers of the Mádhyandiní Śákhá. See the Dharmasindhu *pari.* iii. 1st part l. 57 p. 1 lines 3, 4; ब्राह्मविवाहोढापुत्राणां तु सर्वेषां मातामहगोत्रं न वर्ज्यम्। किन्तु माध्यन्दिनीयानामेव। मातृगोत्रं माध्यन्दिनीयानामिति सत्याषाढवचनात्। तथैव सर्वत्र शिष्टाचाराच्च। Translation:—"In the case of bridegrooms born of [mothers], married according to the *Bráhma* rite, it is not all that have to avoid the *gotra* of their maternal grandfather, but only such as are followers of the *Mádhyandiní Śákhá*; for Satyáshádha says: 'the *gotra* of the mother [is to be ob-

his commentary. Bṛihat Paráśara too like Manu omits the *Pravara*.[1] Gautama[2] and Vasishṭha omit mention of the *gotra* altogether.[3] Śaṅkha[4] contracts by one degree the *Sapiṇḍa* relationship mentioned by Yájñavalkya.[5] Vishṇu[6] agrees with Yájñavalkya.

Thus it is clear that there is no agreement amongst these *Rishis*. Hence the directions to abide by caste customs and country usages.[7]

---

served] by the followers of the Mádhyandiní Śákhá'; and the usage of the learned is to the same effect everywhere." See to the same effect the Samskárakaustubha l. 196, p. 1, ll. 2—4, and the Gopínátha Bhaṭṭí. The Nirṇayasindhu (*pari.* iii., 1st part, l. 30, p. 2), which thinks the restriction applies to all, is refuted by the Samskára- 10
kaustubha.

[1] Bṛihat Paráśara, ch. iv. (Part ii. p. 119 Cal. ed.) पितुर्यत्र सगोत्रत्वं मातुर्यस्य सपिण्डता । नच तामुद्वहेत्कन्यां दारकर्मण्यनादृताम् ॥

Translation :—A maiden who is a *Sagotra* (of the same family) of the father, and who is a *Sapiṇḍa* of the mother should not be married, she not being accepted [as available] for marriage.

[2] Gautama, ch. iv., (Part ii p. 407 Cal. ed.) गृहस्थः सदृशीं भार्यां विन्देतानन्यपूर्वां यवीयसीम् । असमानप्रवरैर्विवाह ऊर्ध्वं सप्तमात्पितृबन्धुभ्यो बीजिनश्च मातृबन्धुभ्यः पञ्चमात् ।

Translation :—A householder should marry a bride who is equal [by class], who has not been married before, and who is younger. Marriage [takes place] with those who 20
have not the same *pravara*, and who are beyond the seventh degree on the father's side, as well as on that of the begetting father [as distinguished from the nominal father, *i.e.* the husband of the mother], and who are beyond the fifth degree on the mother's side.

N.B.—I have translated above the words *pitṛibandhubhyah* and *mátṛibandhubhyah* into 'on the father's side' and 'on the mother's side' in accordance with the comment of Háradatta. The Nirṇaysindhu (*pari.* iii., 1st part, l. 23, p. 1, line 8) interprets the former into 'from the father and from the technical paternal Bandhus'; and the words into 'from the mother and from the technical maternal Bandhus.'

[3] Vasishṭha :—Ch. viii. (Part ii. p. 471, Cal. ed.) गृहस्थो विनीतक्रोधहर्षो गुरुणानुज्ञातः स्नात्वा असमानार्षमस्रष्टमैथुनां यवीयसीं सदृशीं भार्यां विन्देत् । पञ्चमीं मातृबन्धुभ्यः सप्तमीं पितृबन्धुभ्यः । 30

Translation :—A householder, banishing anger or joy, being permitted by his preceptor, and having bathed [on the termination of his studentship] should marry a maiden who has not the same *pravara*, who has not known a male, who is younger, and of the same class, and who is [not within] the fifth [degree] on the mother's and the seventh on the father's side.

[4] Śaṅkha :—Ch. iv. (Part ii. p. 346, Cal. ed.) विन्देत विधिवद्भार्यामसमानार्षगोत्रजाम् । मातृतः पञ्चमीं चापि पितृतस्त्वथ सप्तमीम् ।

Translation :—One should marry a maiden according to proper rites, who has neither the same *pravara*, nor is of the same *gotra*, and who is [not within] the fifth [degree] on the mother's and the seventh on the father's side. 40

[5] See above Part ii. chap. i. vv. 52, 53, pp. 167 and 168.

[6] Vishṇu :—Ch. xxiv. (Part i. p. 109 Cal. ed.) न सगोत्रां न समानार्षप्रवरां भार्यां विन्देत् मातृतस्त्वापञ्चमात् पुरुषात् पितृतश्चासप्तमात्.

Translation :—One should not marry a bride who is of the same *gotra* or has the same *rishi* as *pravara*, and is within the fifth (degree) on the mother's and the seventh on the father's side.

[7] Áśvaláyana Gṛihya Sútra i. 7, 1 (p. 25, Cal. ed.) Nirṇayasindhu *pari.* iii. 1st part, l. 30, p. 1, line 8.

In such circumstances it becomes imperative to enquire into the circumstances of the people, before any text or texts are applied for the government of their most important family relations. Have all the twice-born classes *Gotras* and *Pravaras*; or are we trying to square Áryan society in India into the circle of certain texts, and fit it to them according to certain preconceived notions? We have four great classes. Have they all got *Gotras* and *Pravaras*? The first are Bráhmaṇas. Many of them have no *Gotra*, or if they once had, it is not now known. If the *Gotra* is not known, the *pravara* cannot be known; for the one essentially depends on the other.[1]

I know the existence of Kshatriyas and Vaiśyas has been questioned. But that there are both classes still existing is, I think, proved by cotemporary history and current statistics.[2]

At the same time, it is no secret that they have neither *gotra* nor *pravara*. This is on the authority both of old texts, as well as of current history.[3] Indeed thousands of Bráhmaṇas themselves in different parts of the country can be said to be any hardly better. Hence they are told to borrow a *gotra* from the *Áchárya* or the *Purohita* for the occasion. On this point I must quote the following from Kamalákara[4]:—

स्वगोत्राद्यज्ञाने तु सत्याषाढः । अथानाज्ञातबन्धोः पुरोहितप्रवरेणाचार्यप्रवरेण वेति । आचार्यगोत्रप्रवरानभिज्ञस्तु द्विजः स्वयम् । दत्त्वात्मानं तु कस्मैचित्तद्गोत्रप्रवरो भवेत् ॥ यद्वा स्वगोत्रप्रवरविधुरो जमदग्निजः । विवाहं च न तेनैव गोत्रेण तु समाचरेदिति कश्चित् । दिवोदासीयेऽपि । स्वगोत्रप्रवराज्ञाने जमदाग्निमुपाश्रयेत् ।

Translation:—"In the case of one ignorant of one's *gotra* and the like, Satyáshádha says 'of one whose kinsmen [or pedigree] are not known, [rites are to be performed] according to the *pravara* of the *Purohita* (family priest) or the *Áchárya* (religious preceptor).' Some [author] says:—'A twice-born, ignorant of his *gotra* and *pravara*, should give himself to another and belong to his *gotra* and *pravara*; or one who has no *gotra* and *pravara* of his own [should be considered] a descendant of Jámadagni, and should not intermarry in that *gotra*.' Even in the Divodásíya [it is said]:—'Where one's *gotra* and *pravara* are not

[1] The Nirṇayasindhu *pari.* iii. 1st part l. 27 p. 2 to l. 30 p. 1; Samskárakaustubha l. 195 p. 1.

[2] See amongst other authorities Śúdra Kamalákara leaf 85, p. 2. The Rájputana Gazetteer, vol. I., Calcutta, 1879, pp. 37—81; Gazetteer for the Hydrabad Assigned Districts by N. C. Lyall, C. S., 1870, p. 183; Atkinson's Gazetteer, N. W. P. vol. I. pp. 48, 103, 159-62, 266, 329; all districts in the N. W. Provinces have nearly all the old divisions: see also reference to castes in vols. 2 to 4 of Atkinson's N. W. P. Gazetteer, and so there are in Ayodhyá, so also the Gazetteer for the province of Oude, vols. 1 to 30, 1877, also contains ample evidence to the same effect.

[3] Áśvalayana Śrauta Sútra, 2nd half, 6, 15, 4, and comments thereon, p. 885, Cal. ed.; Samskárakaustubha l. 195 p. 10; Nirṇayasindhu *pari.* iii. 1st part, l. 30, p. 1, line 1; Dharmasindhu *pari.* iii. l. 56, p. 2 and l. 57, p. 1.

[4] Nirṇayasindhu, *pari.* iii, 1st half, l. 30, p. 1.

known, Jamadagni should be resorted to [*i. e.* his *gotra* should be accepted].' "

This shows to what lengths Hindu society had gone in Kamalákara's time. Since then the confusion and ignorance has become greater still. What is the criterion for settling the validity of these marriages, nay and of Bráhmaṇa marriages too? The *Purohita* is the officiating priest, and the *Áchárya* is one who teaches one Veda (Manu, chap. ii. v. 140). Both these are necessarily changing elements; and even if they were constant, it would be ridiculous to determine the marriage relationship of the parties, from the *gotras* and *pravaras* of entirely distinct persons. For even if the parties continue in one place, the priests may change, but if they move to different places, the priests must be necessarily different. Besides such cases—(and they are thousands and lakhs)—are provided by no texts at all. A marriage between persons so circumstanced is a good marriage when accepted as such by the people according to their own usages.

Applying these remarks to particular classes of cases, I would refer to the *Sapiṇḍa* Section,[1] where the later writers have themselves recorded how far in their times usages had upset the *Sapiṇḍa* provisions of the Smritis. The following passage from the Samskárakaustubha shows that it is allowable to contract the *Sapiṇḍaship* if usage sanctions such a step. Thus:—

"अतः सिद्धमेतत् कलावपि येषां कुले देशेऽनुकल्पत्वेन सापिण्ड्यसङ्कोचः परम्परया समागतः तेषां तादृशसङ्कोचेन विवाहे न दोषः। अस्ति च भार्यात्वोत्पत्तिः। अन्येषां तैःसह व्यवहारे नैव दोषः। स्वयं तु स्वकुलदेशविरुद्धसापिण्ड्यसङ्कोचेन विवाहे भवत्येव दोषः नच भार्यात्वोत्पत्तिः। दृश्यन्ते हि स्वयं सापिण्ड्यसङ्कोचेन विवाहमकुर्वन्तोऽपि तादृशसङ्कोचेनासकृज्जातविवाहेभ्यः कन्याः स्वीकुर्वन्तस्तत्कुलीनान् श्राद्धादौ भोजयन्तश्च बहवः शिष्टाः। अतएव मातुलकन्योद्वाहिनां हेमाद्यादौ श्राद्धनिषेधोऽपि स्वकुलदेशे परम्परयानागतसापिण्ड्यसङ्कोचकृतविवाहविषय एवेति बोध्यम्"॥—(The Samskárakaustubha l. 175 p. 2 lines 2—6.)

Translation:—"Thus it is established that even in the Kali age, marriage within the prohibited degrees is not sinful, if it takes place in families or countries where the alternative of the narrowing of the *sapiṇḍa* relationship has prevailed through several generations, and if it is in accordance with such usage. The state of the wife is also superinduced [on the bride so married]. There can be no sin in others associating [with such a family]. There will of course be a sin in a marriage within prohibited degrees where such marriage is opposed to [the usage of] the family or the country; nor will the state of the wife be superinduced [on the bride so married]. Several *śishṭas* (learned men), who themselves do not marry within the prohibited degrees, are seen accepting [into their family] brides from those who have more than

[1] See above pp. 353—356.

once contracted such marriages, and feeding the descendants of such a family on an occasion like that of *Sráddha* (an offering to the manes). Therefore, the prohibition [laid down] in Hemádri and the rest in regard to [the entertainment of] those who marry the daughters of their maternal uncles, at a *śráddha* (an offering to the manes) should be understood as applying to those who marry within the prohibited degrees without such usage having prevailed in their family or their country through several generations."

The entire passage from the Kaustubha is given elsewhere.

In cases where the *Pravaras*[1] of both parties are the same, marriage is said to be improper. Very few do this knowingly. But if it be done, marriage cannot be dissolved. Some hold that a girl so married should be maintained like a mother. But there are hundreds of families notorious for such connections. They were once accounted inferior in social position, and even now some sticklers will not contract alliances with such families. But the majority do so, and even those who will not contract matrimonial alliances with them, treat them in all respects as well qualified members of their communities. The question of a proper or an improper marriage is therefore always one of usage, to be determined according to the people's *áchára* (practice), and not by mere texts of greater or less antiquity.[2]

Other instances of the supersession of text law by new usages are not wanting. The Samskárakaustubha (l. 196 p. 1 lines 9 and 10) cites a text of Nárada[3] to show that a *pratyudváha* (the marriage of a brother and sister in one family with a sister and brother in another respectively)

[1] See Samskárakaustubha, leaf 182, p. 2. There are 49 *Pravaras* altogether, of which a list is given. They are also enumerated by Áśvaláyana in his Śrauta Sútra (pp. 871—889, Cal. ed)

[2] See the texts quoted by Nirnayasindhu *pari.* iii. 1st half, leaf 30, page 1. The Chaturvimśatimata says :—यस्तु देशानु रूपेण कुलमार्गेण चोद्वहेत् । नित्यं स व्यवहार्यः स्याद्वेदाचैतत्प्रदृश्यते ॥—Translation : —' He who marries in accordance with the usage of his country or his family may always be associated with, [for] this [rule] is supported by the Vedas.' The Chaturvimśatimata again :—यस्मिन्देशे य आचारः पारंपर्यक्रमागतः । वर्णानां किल सर्वेषां स सदाचार उच्यते. Translation :—Where a usage has prevailed through [several] generations in a [particular] class in a [particular country], that [usage] is named *Sadáchára* (practice of the learned).

Bhrigu says :—यस्मिन्देशे पुरे ग्रामे वैविधे नगरेपि वा । या यत्र विहितो धर्मस्तं धर्मं न विचालयेत् ॥ Translation ;—' That usage which prevails in a country, a city, a village, a community of *traividyas* (people learned in three Vedás) or a town, should not be disturbed.'

[3] The text runs thus :—

प्रत्युद्वाहो नैव कार्यो नैकस्मिन्दुहितृद्वयम् ।
न चैकजन्ययोः पुंसोरेकजन्ये तु कन्यके ॥

Translation :—*Pratyudváha* (exchange in marriage) should never be done; two daughters [should not be given] to one [individual]; so also should two daughters of one man not be given in marriage to two sons of another.

is prohibited. But custom has now decreed otherwise; and it is a common occurrence in these days in our society, even in the highest class, and is known in Maráthi by the name of *Badalávaṇa* (exchange). It will be seen that the above text is thus clearly superseded by custom.

As regards the marriage of one person with two sisters, the text is in some districts respected by usage only to this extent, that their marriage as cotemporaneous wives is held improper. But on the death of one wife, her sister is married without the least objection being raised as to the propriety of such an alliance. Probably it was on seeing the force of this growing custom that Náráyaṇabhaṭṭa, the author of the Muhúrta Mártaṇḍa, had in Śake year 1493 to record in v. 51[1] of his chapter on marriage (l. 39 p. 1), that such marriages were permissible under exceptional circumstances. In some provinces, however, such marriages freely take place; two and even three sisters marrying one individual.

Again, referring to the second hemistich of the above verse, I may say that the marriage of two sisters to two brothers is sanctioned by custom. Instances of such marriage in the highest families will be found in Bombay and other centres of the population.

As regards *Viruddha sambandha* (contrary alliances), they are permitted as a matter of course. Thus, two sisters are given in marriage to a nephew and his maternal uncle: on the other hand, a girl and her mother's sister are married to two brothers.

The question of the marriage of a man with the daughter of his mother's brother was once considered debatable by some writers. Usage has however sanctioned such marriages amongst the Dekkani Bráhmaṇas of various denominations. Thus, amongst various sections of the Deśastha Bráhmaṇas and amongst the Kaḷiráḍas such connections are very frequent; and it is said that if a man can get such a bride, he will often have no other. On this point I give the opinions of different modern writers, which will also furnish useful information on the customary law generally.

The Dharmasindhu (*pari.* iii., 1st half l. 50 pp. 1 and 2), approving of Anantadeva's view on this subject, summarizes it thus:—

कौस्तुभे तु ॥ उद्वहेत्सप्तमादूर्ध्वं तदभावे तु सप्तमीम् । पञ्चमीं तदभावे तु पितृपक्षेऽप्ययं विधिः ॥ सप्तमीं च तथा षष्ठीं पञ्चमीं च तथैव च । एवमुद्वाहयेत्कन्यां न दोषः शाकटायनः ॥ तृतीयां वा चतुर्थीं वा पक्षयोरुभयोरपि । विवाहयेन्मनुः प्राह पाराशर्यो यमोऽङ्गिराः ॥ यस्तु देशानुपूर्व्येण कुलमार्गेण चोद्वहेत् ॥ नित्यं स व्यवहार्यः स्याद्वेदाच्चैतत्प्रतीयत इत्यादिवचनानां चतुर्विंशतिमतपरत्वेन्मन्वादिषूपलभ्यमानत्वात् सापिण्ड्यसङ्कोचेन विवाहस्य बहुदेशेषु दर्शनाच्च येषां कुले देशे चानुकल्पत्वेन सापिण्ड्यसङ्कोचः परम्परया समागतस्तेषां सापिण्ड्यसङ्कोचेन विवाहो न दोषाय ।

[1] The latter half of it runs as follows:—

नैकस्मै दुहितृद्वयं सहजयोर्नैकोद्भवे कन्यके दद्याद्वह्नं मिथो न तनुयात्कुर्यादसम्पद्यदः ॥

स्वकुलदेशाविरुद्धेन सापिण्ड्यसङ्कोचेन विवाहे दोषो भवत्येव । जनपदधर्मा ग्रामधर्माश्च तान्विवहे प्रतीयात् ॥ येनास्य पितरो याता येन याताः पितामहाः । तेन यायात्सतां मार्गं तेन गच्छन्न दुष्यति इत्यादिवाक्यैः स्वकुलदेशाचाराविरुद्धस्यैव शास्त्रस्य विवाहेऽनुसर्तव्यत्वात् । एवं मातुलकन्यापरिणयनेऽपि । तृप्तां जहुर्मातुलस्येव योषां भागस्ते पैतृष्वसेयीं वपामिवेति मन्त्रलिङ्गैः मातुलस्य सुतायुद्वा मातृगोत्रां तथैव च । समानप्रवरां चैव त्यक्त्वा चान्द्रायणं चरेत् इत्यादिस्मृतीनां बाधाद्येषां कुले मातुलकन्यापरिणयः परम्पराप्राप्तस्तैः स कार्यः । गोत्रान्मातुः सपिण्डाच्च विवाहो गोत्रधस्तथेति मातुलकन्याविवाहस्य कलिवर्ज्यत्ववचनमपि येषां कुले देशे मातुलकन्याविवाहो नास्ति तत्परम् । मातुलकन्यापरिणयनस्यानेकश्रुतिस्मृतिसिद्धत्वात् । अत एव मातुलकन्योद्वाहिनां श्राद्धे निमन्त्रणनिषेधोऽपि स्वकुलाचारादिविरोधेन तदुद्वाहादिपरः । उक्तविधसापिण्ड्यसङ्कोचेन विवाहं कुर्वतां शिष्टैः श्राद्धादौ भोजनाद्याचारादित्यादि बहूपपादितम् ॥

Translation:—As for the [Samskára] Kaustubha it says:—'Since in works like the Chaturvimśatimata and the Shaṭtrimśanmata, there are seen texts like the following:—('One should marry a [bride] beyond the seventh [degree]; failing her, one of the seventh degree; failing her, one of the fifth degree. This rule holds even on the paternal side;' 'Śákaṭáyana says there is no sin in marrying a bride of the seventh, the sixth, or the fifth [degree]'; 'even [a female of] the fourth or the third [degree] on either side may be married according to Manu, Párášarya, Yama, and Aṅgiras'; 'he who has married in accordance with the usage of his country or family, may ever be associated with, as appears from the Veda'); and since marriages by the contraction of *Sapiṇḍa* relationship are seen in several countries, [it follows] that a marriage by contraction of the *Sapiṇḍa* relationship is not sinful for those in whose country or family such contraction of *Sapiṇḍa* relationship as an allowable alternative has prevailed through generations; but that it is sinful for those who perform such marriages by contraction of the sapiṇḍa relationship against the usage of the country or the family. For, in respect of marriage, such *Śástra* (text law) alone has to be followed as is not repugnant to the usages of one's country or family, in accordance with texts like the following:—'The usages of the country should be observed in marriage;' 'one should follow that path as the path of the good, whereby one's forefathers and grandfathers have gone; [for] in going by that path, he will be committing no sin.' Accordingly, in the case of a marriage with the daughter of one's maternal uncle, such marriage may be done by those in whose family the espousal of a maternal uncle's daughter has descended through generations; for Smṛitis like the following, (viz., 'one marrying the daughter of his maternal uncle, or a daughter either of the same *gotra* as the mother [or rather the mother's father], or having the same *pravara* [as the bridegroom] should abandon her, and observe the *chándráyaṇa* penance,' are overruled by such indications from the Vedas as the following:—'[They] offered thee as thy portion the *vapá* properly dressed; as [they do] the daughter of the maternal uncle or the daughter of the

father's sister.' That text too in reference to prohibitions in the *kali* age, which forbids the marriage with the daughter of a maternal uncle, viz., 'marriage with one of the maternal *gotra*, or with a *sapiṇḍa*, and the slaughter of a cow [are prohibited],' applies [only] to those in whose family or country, marriage with the daughter of a maternal uncle is not performed; since such marriage is deducible from various *Śruti* and *Smṛiti* [texts]. Therefore the prohibition about inviting at a *śráddha* those who have performed marriages with the daughters of their maternal uncles applies to those who have so married in opposition to their family usage; it being usual for the learned to invite at a *śráddha* feast men who have married according to the said contraction of *sapiṇḍa* relationship. Much has been said in this way.

Mádhava in the following passage distinctly sanctions such marriages, both on texts and customs in the Dekkan and other Southern countries :—

एतेन मातुलसुताविवाहविषये विवादोपि परास्तः । तथाहि । तन्निषेधवचनानि गान्धर्वादिविवाहोद्वजविषयाणि तत्र सापिण्ड्यनिवृत्तेरभावात् तदनुग्राहकश्रुतिस्मृतिसदाचारा ब्राह्मादिविवाहोद्वजविषयाः । तत्र सापिण्ड्यनिवृत्तेः । तानि च निषेधवचनानि । तत्र ज्ञातातपः । मातुलस्य सुतामूढ्वा मातृगोत्रां तथैव च । समानप्रवरां चैव द्विजश्चान्द्रायणं चरेत् । पैठीनसिरपि । पितृमातृस्वसृदुहितरो मातुलसुता धर्मतस्ता भगिन्यस्ता वर्जयेदिति विज्ञायते ॥ सुमन्तुरपि । पितृपत्न्यः सर्वा मातरस्तद्भ्रातरो मातुलास्तद्दुहितरश्च भगिन्यस्तदपत्यानि भागिनेयानि अन्यथा सङ्करकारिण्यः स्युरिति । व्यासः । मातुः सपिण्डा यत्नेन वर्जनीया द्विजातिभिरिति । नन्वविशेषेण प्रवृत्तानामेषां वचनानां कथं विशेषविषयता । विशेषवचनकलापादिति ब्रूमः । तथाच मनुः । पैतृष्वसेयीं भगिनीं स्वस्रीयां मातुरेव च । मातुश्च भ्रातुराप्तस्य गत्वा चान्द्रायणं चरेत् ॥ एतास्तिस्रस्तु भार्यार्थे नोपयच्छेत बुद्धिमानिति ॥ भगिनीपदं पैतृष्वसेय्यादेर्विशेषणम् । आप्तस्येति मातुर्भ्रातृविशेषणम् । तत्र सुतामित्यध्याहारः । आप्तस्य सन्निकृष्टस्य सपिण्डस्य गान्धर्वादिनोढाया मातुर्भ्रातुरित्यर्थः । पैतृष्वसेयीमित्यत्राप्यनिवृत्तसापिण्ड्या गान्धर्वादिनोढा पितृष्वसा विवक्षिता । तथा सति तदुहितुर्भगिनीति विशेषणं सार्थकम् । ब्राह्मादिविवाहेषु सापिण्ड्यनिवृत्तेर्भगिनीपदं नान्वियात् । अयमेव न्यायो मातृष्वस्रीयायामपि योजनीयः । तस्माद्भगिन्याप्तपदोपेतमनुवचनबलादविशेषनिषेधो विशेषविषय एवोपसंह्रियते । ननु ब्राह्मादिविवाहविषये मातुलसुताया इव मातृष्वसृसुताया अपि विवाहः प्राप्नुयात् । तत्र शिष्टगर्हितत्वेन तत्र निषेधस्मृतिकल्पनात् । शिष्टगर्हितस्यानुपादेयत्वं याज्ञवल्क्य आह । अस्वर्ग्यं लोकविद्विष्टं धर्म्यमप्याचरेन्नहीति । यद्यपि मातुलसुतापरिणयनमुदीच्यशिष्टगर्हितं तथापि दाक्षिणात्यशिष्टैराकृतत्वेन नाविगीतोयमुदीच्यानामाचारः । नच दाक्षिणात्यानां रागमूलत्वे शङ्कनीयं विधिनिषेधपरीक्षकैरेव तद्विवाहकरणात् । मातृष्वसुः सुताविवाहस्त्वविगीतेन शिष्टाचारेण गर्हितः । मातुलसुताविवाहस्यानुग्राहकश्रुत्यादयः । तत्र मन्त्रवर्णः । आयाहीन्द्रपथिभिरीळितेभिर्यज्ञमिमं नो भागधेयं जुषस्व ॥ तृप्तां जहुर्मातुलस्येव योषा भागस्ते पैतृष्वसेयी वपामिवेति । अयमर्थः । हे इन्द्र पथिभिरीळितेभिस्तुर्तैर्नोस्माकमिमं यज्ञमायाहि आगत्य च अस्माभिर्दीयमानं भागधेयं जुषस्व तृप्तामाज्यादिना संस्कृतां वपां त्वामुद्दिश्य जहुः त्यक्तवन्तः तत्र दृष्टान्तद्वयं यथा मातुलस्य योषा दुहिता दौहित्रस्य भागः परिणेया परिणेतुं योग्या यथाच पैतृष्वसेयी पौत्रस्य भागः तथायं ते तव भागो वपाख्य इति । वाजसनेयकेपि । तस्मादुसमानादेव पुरूषादत्तावाद्यश्च जायेते च मिथः संकल्पयतः कूटस्थमारभ्य उत तृतीये संगच्छावहै चतुर्थे संगच्छावहा इति । समानादेकस्मात्पुरूषादत्ता भोक्ता आद्यः संभोग्यः द्वावुत्पन्नौ तौ मिथः संकल्पयतः कूटस्थमारभ्य तृतीये चतुर्थे वा संगच्छावहै विवहावहा इत्यर्थः । यद्यप्ययमर्थवादः तथापि मानान्तरविरोधाभावात् स्वार्थे प्रमाणम् । विरोधिवचनानां मातृसपिण्डाविषयत्वस्य वर्णितत्वात् । तस्मादविरोधार्थवादेनानुदितत्वादुपरिधारणवद्विधिः कल्पयितुं शक्यते । तथाहि प्रेनाग्निहोत्रे श्रूयते । अधस्तात्समिधं धारयन्ननुब्रूवेदुपरिहि देवेभ्यो यज्ञं धारयतीति ।

तत्र पैतृकस्य हविषोधस्तात् समन्त्रकं समिद्धारणं विधाय तद्वाक्यशेषे समिधो हविरुपरिधारणं दैवे कर्मणि यच्छुतं तत्किमर्थवादः उत विधायकइति संशयः । तत्राधोधारणविधिस्तावकत्वेन तदेकवाक्यतालाभादर्थवाद इति पूर्वः पक्षः । प्रसिद्धं ह्यर्थमनूद्य तेन स्तुतिर्युक्ता उपरिधारणं तु न क्वापि प्रसिद्धम् । अतः स्तावकत्वायोगाद्वाक्यभेदमभ्युपगम्याप्यपूर्वार्थत्वाद्विधिः कल्पितः । एवं तृतीये पुरुषे संगच्छावहा इत्यादावपि अपूर्वार्थत्वेन मातुलसुतां विवहेदिति विधिः कल्प्यते । तस्माच्छ्रुतावनुगृहीतोयं विवाहः । स्मृतयस्तु ब्राह्मादिषु सापिण्डयनिराकरणेन मातुलसुताविवाहप्रापकश्रुत्या प्रदर्शिताः । शिष्टाचारश्च दाक्षिणात्यानामविगीत उदाहृतः । केचित्तु आसुरादिष्वपि देशविशेषेण मातुलसुताविवाहो धर्म्य इति मन्यन्ते उदाहरन्ति च वचनानि । तत्र बौधायनः । पञ्चधा विप्रतिपत्तिर्दक्षिणतःअनुपनीतेन भार्यया सह पर्युषितभोजनं मातुलदुहितृपितृष्वसृदुहितृपरिणयनमिति तथोत्तरतः ऊर्णाविक्रयः सीधुपानमुभयतो दद्भिर्व्यवहारः सायुधीयकं समुद्रयानमिति इतर इतरस्मिन्कुर्वन्दुष्यति । न स्वदेशे तथेति । उदीच्य इतरस्मिन्दक्षिणे देशे सीधुपानादिकं कुर्वन्दुष्यति । न स्वदेशे कुतः देशप्रामाण्यात् । देशनिबन्धत्वादाचारप्रामाण्यस्येत्यर्थः । तथा देवलः । यस्मिन्देशे य आचारो न्यायदृष्टस्तु कल्पितः । स तस्मिन्नेव कर्तव्यो देशाचारः स्मृतौ भृगोः ॥ यस्मिन्देशे पुरे ग्रामे त्रैविद्ये नगरेपि वा । यो यत्र विहितो धर्मस्तं धर्मं न विचालयेदिति ॥ ननु शिष्टाचारप्रामाण्ये सति दुहितृविवाहोपि प्रसज्येत प्रजापतिना तथाचरणात् । अतएव बौधायनः । अनुष्ठितं तु यद्देवैर्मुनिभिर्यदनुष्ठितम् । नानुष्ठेयं मनुष्यैस्तदुक्तं कर्म समाचरेदिति ॥ तदेवं पूर्वोक्तब्राह्मादिविवाहव्यवस्थया देशभेदविषयव्यवस्थया मातुलसुताविवाहोऽसपिण्डामित्यादिशास्त्रादेव सिद्धः । [MS. Áchára Mádhava.]

Translation:—In this way the dispute in regard to one's marriage with the daughter of his maternal uncle is also set at rest; for those texts that prohibit it refer to [brides] born in *Gándharva* or a similar [form of] marriage, owing to the absence of the termination of the *sapiṇḍa* relationship in such marriages; while the Śruti and Smṛiti texts and the usage of the learned which support it apply to [brides] born in Bráhma or the like form of marriage, owing to *sapiṇḍa* relationship ceasing in such cases. The prohibitory texts are [as follows]:—Śátátapa [says]:—'having married a daughter of the maternal uncle, or [a bride] of the mother's *gotra* or of the same *pravara*, a twice-born shall perform the *chándráyaṇa* [penance].' Paiṭhinasi too [says]:—'The daughters of the father's or the mother's sister, and the daughter of the maternal uncle [are] properly sisters; it is understood that they should be avoided [in marriage].' Sumantu also:—'All fathers' wives [are] mothers, their brothers maternal uncles, their daughters sisters, and the issue of such daughters [are] sister's children. Otherwise there will be [a prohibited] intermixture [of races].' Vyása:—'*Sapiṇḍa* relations of the mother should be carefully avoided by the twice-born [in marriage].' Now [if it be asked] how these texts, which contain no limitation, can be restricted in application, we answer 'in virtue of several texts [indicating the necessity of such restriction].' Thus Manu (ch. xi. vv. 171, 172)—'Having married the daughter of the father's sister, the daughter of the mother's sister, and [the daughter] of the mother's brother who is *ápta*[1] (a *sapiṇḍa* relation), who are all sisters, [a man] should observe

[1] Kullúka's reading of this word is तनया instead of Mádahva's आप्तस्य (see Manu l. 204, p. 1).

the *chándráyaṇa* [penance]. A wise man should not marry these three females.' The term *Bhaginí* (sister) qualifies the *paitṛishvaseyí* (daughter of the father's sister) and the rest. [The term] *áptasya* (of a *sapiṇḍa* relation) qualifies the *matur-bhrátuh* (of the mother's brother). Here the term *sutám* (daughter) is understood. *Áptasya* means of the nearest *sapiṇḍa* relation; [so that the maternal uncle here meant] is the brother of the mother, who has been married according to the *Gándharva* or a similar [form of marriage]. Even in the case of the daughter of the father's sister, that father's sister, who being married according to *Gándharva* or a like [form of marriage] has her *sapiṇḍa* relationship [with her father's family] uninterrupted, is here meant: for in such a case [alone the term] *Bhaginí* (sister) could be properly applied. In the case of *Bráhma* and a like [form of marriage] the word *Bhaginí* (sister) could not be used, as there the *sapiṇḍa* relationship [with the family of birth] ceases. This same explanation applies in the case of the daughter of the mother's sister. Therefore a prohibition which [apparently] was without a limitation, is restricted to a particular sphere, in virtue of the [said] text of Manu, containing the words *Bhaginí* and *ápta*. It may be said that in the case of a marriage according to the *Gándharva* or a like [form], the daughter of the mother's sister would be eligible for marriage just as the daughter of the mother's brother [is held to be]. [But] that [can] not [be]; for the condemnation [of such a marriage] by the learned will lead to the inference [of the existence] of a [special] prohibitory text [to that effect]. Yájñavalkya thus lays down the rejection of what is condemned by the learned:—'[One] should not practise that which, though ordained, is rejected by the people, and can [therefore] not lead to heaven? Although marriage with the daughter of a mother's brother is condemned by the learned men of the north; yet it is accepted by the learned men of the south. So such [a marriage] will be a reprobated practice on the part of the northerners, but not so on the part of the southerners. [Such marriages] in the case of the southerners cannot be imputed to wantonness; for they are [often] made by people versed in positive and negative [ordinances]. The marriage with a daughter of the mother's sister is, on the other hand, condemned by the unreprobated practice of the learned. *Śruti* texts and the like supporting the marriage with the daughter of a mother's brother are [as follows]:—Of them the Śruti text [runs thus]:—'Oh Indra, come to this sacrifice of ours by famed routes; and accept thy portion of the dressed omentum which [the sacrificers] have dedicated [to thee] as the daughter of a mother's brother [and] as thy daughter of a father's sister.' The meaning is:—Oh Indra, do come to our sacrifice by famed routes; and having come, do accept the portion offered by us [sacrificers] who have renounced in

your favour an omentum well dressed by clarified butter and the like. There are two similes [here adduced, thus:—] Just as the daughter of the mother's brother is the portion of the daughter's son,[1] that is to say, is marriageable by him, and as the daughter of a father's sister is the portion of the son's son,[1] that is to say, is marriageable by him; so is this bearing the name of *vapá* (omentum) your portion. So also in the Vájasaneyaka[2]:—'From the same man are born both the enjoyer (male) and the enjoyed (female).' They say to each other:—'counting from the common ancestor, we shall unite either in the third or in the fourth [degree].' The meaning is—[Here Mádhava's commentary is not translated because it contains nothing more than what appears in the translation of the text just given]. Although this proposition is [apparently] an *arthaváda*[3] (a corroborative sentence), yet it is by itself obligatory as not being repugnant to any kind of proof, the prohibitory texts having been stated to refer to [the case of a bride] who is a *sapiṇḍa* relation of the mother. Therefore it is possible here to infer a specific commandment based on an *arthaváda*, which is contradicted by nothing, as is done in the case of the placing above [of the oblation on a *Samidh*]. In [the ritual about] the cremation of a deceased, it is stated [in a Vedic text]:—'Holding a *samidh* (a small stick) below, [the performer of the obsequies] should move forwards, with an [article of] sacrifice to deities supported on [the said stick].' Here the holding of the stick below the offering to the manes after [recitation of] holy texts, being [first] enjoined, the holding the offering on the stick for [dedication to] deities is referred to in the latter part of the sentence. Now the question is, whether this last statement is an *arthaváda* or an ordinance [by itself]. The objector's proposition is that it should be taken as an *arthaváda*, commending the ordinance of the holding below [of the stick], so as to treat the whole as one sentence. [But] commendation is properly made by something which [itself] is well-known; and the holding above [of the offering] is not so well-known anywhere. So it being impossible [to take the statement] as commendatory, the splitting up of the sentence should be accepted, and it should be construed as laying down an independent ordinance. Similarly in [the sentence] 'we shall unite in the third degree,' a statement being made of something not mentioned before, an ordinance [permitting] the marriage with the daughter of the maternal uncle may be inferred [therefrom]. Thus this [kind of] marriage is favored by the *Śrutis*. As *sapiṇḍa* relationship ceases in the *Bráhma* and the like [forms of] marriages,

[1] This is said in reference to the common ancestor of the bride and the bridegroom.

[2] The Śátápatha Bráhmaṇa in the chapter on *Darśasráddha*.

[3] The definition of *arthaváda* given by Bhaṭṭojí Díkshita in his commentary on Páṇini II. 1, 33—स्तुतिनिन्दाफलकं अर्थवादवचनं अधिकारैवचनं (an *arthaváda* sentence contains [either] a commendation [or] censure as an additional predication).

the [existence of] Smṛitis too may be inferred from the [aforesaid] *Śruti* text favoring the marriage with the daughter of a maternal uncle, and the practice of the learned of the south should be styled as unreprobated. Some think that even in the *Ásura* and the like [forms of marriage], the marriage with the daughter of a maternal uncle may be lawful, and cite texts [in support thereof]. Thus Baudháyana [says]:—'There is a dispute on five points. In the south the partaking of food with a boy who has not had his *upanayana* performed, or with one's wife, and the eating of stale food, and the marriage with the daughter of the maternal uncle and the daughter of the father's sister, [are allowed]. In the north, the sale of wool, the drinking of wine, trading in [animals with] teeth on both sides, the bearing of arms, and travelling by sea [are allowed]. These done by one of another country produce sin; but not [when done] in a country [where they are allowed]. An inhabitant of the north in drinking spirits in another country, *i.e.* the south, commits a sin, but not [in doing so] in his country in virtue of the country [usage]; the meaning being that a usage followed in a country is binding. So Devala [says]:—'A usage which prevails in a particular country as consistent with equity should be observed in that country alone according to the Smṛiti of Bhṛigu. That which is accepted as *dharma* (duty or correct practice) in a [particular] country, city, village, a community of *traividyas* (persons learned in the three Vedas) should not be disturbed.' It may be said that if the practice of the learned should be [held to be] binding, then marriage with one's daughter might have to be allowed on the example of Prajápati. It is on this account that Baudháyana says:—'That which has been done by gods, and that which has been done by sages, should not be done by [ordinary] men, who should follow what has been laid down by them.' Thus from what has been said in regard to Bráhma and the like [forms of] marriage, and the difference of countries, the marriage with the daughter of a maternal uncle is established from the aforesaid text itself, viz., *asapiṇḍám* [the bride should not be a *sapiṇḍa* relation].

The Samskárakaustubha of Ananta Deva observes:—

"एवं आयाहीन्द्र पथिभिरिति बह्वृचमन्त्रे तृप्तां जहुर्मातुलस्येव योषा भागस्ते पैतृष्वसेयी वपामिवेति मातुलकन्यादेः भागिनेयादिंप्रति भागत्वोक्त्या परिणयनसूचनात् सापिण्ड्यसङ्कोचाङ्गीकारेण मातुलकन्यादिपरिणयने इदं मन्त्रलिङ्गमपि साधकं। इदंच मातुलस्य सुतामूढ्वा मातृगोत्रां तथैव च ॥ समानप्रवरां चैव कृत्वा चान्द्रायणं चरेत् इति स्मृत्यपेक्षया बलवदिति बलाबलाधिकरणवार्तिकव्याख्यावसरे न्यायसुधाकार उक्तवान्। वेदाच्चैतत्प्रतीयत इत्यत्र सर्वनाम्ना पूर्वार्धनिर्दिष्टदेशकुलानुसारिण एव सापिण्ड्यसङ्कोचस्य परामर्शात्तदनुसरणमपि वेदोक्तमिति ज्ञाप्यते। तथाचामनन्ति बह्वृचा मन्त्रं। तेन स्त्राध्वंते वततउ नोऽअधिवोचत ॥ मानःपथःपित्र्यान्मानवादधि दूर नैष्टपरावत इति। अत्रहि पित्र्यात् पितुरागतात् मानवान्मनुसंमतात्। उक्तंहि तेन। येनास्य पितरो याता येन याताः पितामहाः ॥ तेन यायात्सतां मार्गं तेन गच्छन्न दुष्यतीति यथोक्तमार्गात्तदतिक्रमेण नोस्मान्दूरं मा नयतेति देवप्रार्थनया तादृशमार्ग एवावस्थानमुचितमिति ज्ञाप्यते ॥ इति स्तुतासो असथारिशादसोयेस्थत्रयश्चत्रिंशच्च ॥ मनो

देवयज्ञियास इति पूर्वार्चे प्रकृतिदेवानामेव मैष्टेति मध्यमपुरुषे कर्तृत्वानुवादेन निषेधसंभवात्। अतएव वेदाश्चेति चकारेण मनुस्मृतेरिति समुच्चीयते। अनेनच यथा भृग्वङ्गिरसनशनाद्यैश्च वृद्धस्य मरणं तथेति सत्यपि कलिवर्ज्येषु पाठे ये वै तन्वं १ विसृजन्तीति श्रुतिस्मृतिसिद्धत्वात् त्रिवर्णाग्रवेशस्य तत्तादृङ्नास्यैव जलाग्रवेशस्य कलिवर्ज्यत्वं स्वीक्रियते। तथा स्वकुलदेशाविरोधिना मातुलदुहितृपरिणयनादेरुक्तविधयानेकश्रुतिस्मृतिसिद्धत्वात् गौत्रान्मातुः सपिण्डाच्च विवाहो गोवधस्तथेति माधवोदाहृतब्राह्मवचनेन प्रतीयमानं मातुलकन्यापरिणयनादेः कलिवर्ज्यत्वमपि स्वकुलदेशाविरोधितादृशपरिणयनविषयमिति ज्ञाप्यते। तच्च बौधायनः। पञ्चधा विप्रतिपत्तिर्दक्षिणतस्तथोत्तरत इत्युपक्रम्य दक्षिणतः पर्युषितभोजनादिभिः सह मातुलकन्यापरिणयनाद्युपन्यस्योत्तरतश्चौर्णाविक्रयाद्युपन्यस्याह तत्र तदितर इतरस्मिन् दुष्यति इतरदितरस्मिन् तत्तद्देशग्राम्यात् मिथ्यैतदिति गौतमः उभयमेव नादियेत शिष्टस्मृतिविरोधदर्शनादिति। तत्रापि
10 प्रामाण्यादित्यन्तो ग्रन्थो मिथ्यैतदित्यादिना पर्युषितभोजनसौधुपानादेर्व्यावर्त्य मातुलकन्यापरिणयनादिविषयतया व्यवस्थाप्यते वेदाश्चेतग्रहणेन इति स्मृत्या श्रुतिस्मृतिसिद्धत्वेनोपन्यस्तोक्तपरिणयने स्मृतिविरोधोपन्यासासम्भवात्। पर्युषितभोजनादौ कर्तव्यतासूचकश्रुतिर्विशेषतः स्मृतेश्चाभावेन स्मृतिविरोधहेतूपन्यासस्तम्भवेनच मिथ्यैतादेति तद्विषयमेवेत्यादि सुधीभिरूह्यम्। अतः सिद्धमेतत् कलावपि येषां कुले देशेनुकल्पत्वेन सापिण्ड्यसङ्कोचः परम्परया समागतः तेषां तादृशसङ्कोचेन विवाहे न दोषः अस्तिच भार्यात्वोत्पत्तिः अन्येषां तैः सह व्यवहारे नैव दोषः। स्वयंतु स्वकुलदेशाविरुद्धसापिण्ड्यसङ्कोचेन विवाहे भवत्येव दोषः। नच भार्यात्वोत्पत्तिः। दृश्यन्ते हि स्वयं सापिण्ड्यसङ्कोचेन विवाहमकुर्वन्तोपि तादृशसङ्कोचेनासकृज्जातविवाहेभ्यः कन्याः स्वीकुर्वन्तस्तत्कुलीनाञ्छ्राद्धादौ भोजयन्तश्च बहवः शिष्टाः। अतएव मातुलकन्योद्वहिनां हैमाद्यादौ श्राद्धनिषेधोऽपि स्वकुलदेशे परम्परयानागतसापिण्ड्यसङ्कोचेन कृतविवाहविषय एवेति बोध्यम्" ॥

20 [Leaf 174 p. 2 and leaf 175 pp. 1, 2.]

Translation:—"In the Rig-Veda hymn, viz., *Áyáhi Indra pathibhih* (oh Indra! come by paths, &c.) daughter of a maternal uncle and the like [females] are spoken of as portions belonging to a sister's son and the like (males), in this manner—'They offered [to thee] as thy portion a dressed omentum, even as a daughter of a maternal uncle or a daughter of a sister of the father.' Thus this indication too from the Vedas is favourable to a marriage with a daughter of one's maternal uncle, or a like [female] by contraction of the *sapinda* relationship. While commenting on the Várttikas relating to the question which texts are of
30 greater weight than others, the Nyáyasudhákara says that the above Vedic hymn has greater authority than the following Smriti text: 'Having married a daughter of a maternal uncle, or a female belonging to the same *Gotra* as his mother, or a female whose father has the same *Pravaras* with himself, a man should undergo a *chándráyana*.' Again, in the text, ('men should always keep intercourse with him who marries according to customs handed down in the country, or according to ways established in his family, this being inferable from the Veda,') the pronoun *etat* (this) refers to the narrowing of *sapinda* relationship in the manner mentioned in the first hemistich, in accord-
40 ance with the customs of one's country or family; and thus again it is inferable that the adherence to such custom is sanctioned by the Vedas. Thus Rig-Vedins have written a hymn, viz.,—"May you who are of this sort save us, protect us, pronounce benedictions upon us. Do

not lead us far off from the path of our forefathers or those approved of by Manu. Do keep us away from circuitous ways." Here *pitryát* signifies 'handed down from forefathers'; *Mánavát* signifies 'approved of by Manu.' For he says:—'He who follows the way which his father followed, or the way which his grandfather followed, shall attain to the path of the righteous. If he incurs censure on that account, he is not to be treated as censurable.' From the aforesaid prayer to gods, viz., "carry us not away, [from the path of our forefathers]" (offered by devotees) on account of their transgression from the path as described above, it is to be inferred that adhering to the same ways alone is proper. Again, 'oh ye gods, who are destroyers of enemies, are thirty-three [in number], and are worthy of an offering from Manu, may you be praised by us.' Hence from the conjunction *cha* (and) in the expression *Vedát cha* (and from the Vedas this is known), the Smṛiti of Manu is also to be included. Here just as [the text] 'The death of an old man by [a fall from] the precipice, fire, and fasting and the like [is prohibited]' occurs in the prohibitions for the Kali age, and yet that prohibition is accepted as applying to [a person's throwing one's-self into] waters other than the confluence of the three rivers [at Allahábad], because of the self-drowning at the said confluence being supported by Smṛitis and Śrutis like 'those who throw their bodies,' &c.; so here, the marriage with the daughter of one's maternal uncle in accordance with the custom of one's country or family, being established in the aforementioned manner from Śrutis and Smṛitis, it follows that the prohibition of such marriage in the Kali age, which appears in the Bráhmaṇa text cited by Mádhava, viz., 'marriage [with a female who is] of the same gotra with or a *sapiṇḍa* relation of the mother, should be held to apply in the case of such a marriage where it is opposed to the custom of one's country or family. Thus Baudháyana having commenced 'there is a dispute on five points,' and having stated that in the south the partaking of stale meals, the marriage with the daughter of one's maternal uncle and the like, and in the north the drinking of the wine, &c. [are allowed], says "that must be [practised] there; in another country it will be a sin. A wrong practice in a wrong place [will be sin] owing to the binding force of the customs of different countries. Gautama says '[all] this is wrong'; so both may be disregarded as opposed to the [practice of] the learned and the Smṛitis." Here in consideration of [that portion of] the text beginning with *mithyaitat*, &c. the [earlier] portion ending with the word *prámáṇyat* should be held not to apply to the partaking of stale meals and the drinking of spirits and the like, and should be restricted to the marriage with the daughter of one's maternal uncle and the like; for in the case of such a marriage which, as stated before, is supported by the Śrutis and Smṛitis

such as 'this is inferable from the Vedas,' it is not possible to allege any opposition with Smṛitis. [On the other hand] in the cases of the partaking of stale meals and the like, there is neither Śruti nor Smṛiti indicating the doing [of such things], and therefore the text *mithyaitat*, &c. (this is wrong, &c.) should be held to apply to them. Thus wise men may interpret the text. Hence it is established, that where the custom of optionally narrowing the circle of sapiṇḍa relationship is handed down from generation to generation in a country or a family, the people of that country or that family do not incur sin, even in the Kali age, by narrowing the sapiṇḍa relationship in that manner. There springs up the relation of (husband and) wife. Others do not incur sin by keeping intercourse with them. When a man marries by personally narrowing the sapiṇḍa relationship against the custom of his own family or country, he certainly incurs sin. Nor does the relation of wife and husband spring up (in the latter case). Surely there appear many respectable men who, though they themselves never marry by narrowing the sapiṇḍa relationship, marry maidens from families in which marriages by narrowing the sapiṇḍa relationship have more than once taken place; and who feed at *śráddha* ceremonies, and the like men sprung from such families. Hence it should be understood that the prohibition, stated in the works of Hemádri and others, to the effect that those who marry daughters of their maternal uncles should not be fed at a *śráddha* ceremony, refers to those men who marry by narrowing the *sapiṇḍa* relationship in spite of a contrary custom handed down in their family or country."

The Smṛiti Chandriká in its comment on the word *asapiṇḍam* (a bride who is not a *sapiṇḍa* relation), raises the question of the validity of a marriage with the daughter of one's maternal uncle, and concludes a long discussion on the subject in the following words:—तेन श्रुतेः स्मृतेराचाराच्च सिद्धं मातुलदुहितृपैतृष्वसेयीपरिणयनमिति सर्वं निरवद्यम्. Translation:—'Thus marriage with the daughter of one's maternal uncle and with the daughter of one's father's sister is established in accordance with *Śruti*, Smṛiti and the usage of the learned. So everything is unobjectionable [*i.e.* explained].' The section ends thus:—इति मातुलदुहितृपरिणयनसमर्थनम् (Thus ends the proof [of the validity] of the marriage with the daughter of one's maternal uncle.)

The Nirṇayasindhu recognises the existence of the custom, but considers it improper. In defiance of Kamalákara, however, the people have accepted it. In regard to this, Gopináthabhaṭṭa, in his Samskáraratnamala, quotes Baudháyana, Bṛihaspati, Devala and other authorities, and holds that such marriages are quite proper, because [स्वदेशनिबन्धनत्वात् आचारप्रामाण्यस्य.] Translation: 'the authority of usage is binding [in reference to people of] the country where it arises.' In the coun-

tries south of the Narmadá (which is always the dividing line) such usages are binding; and if the Southerners go to the North, they take their usages along with them.

The above authorities show that contracting the *sapiṇḍa* restrictions has been sanctioned from the earliest times and by the highest Rishis. It rests with those who attack marriage ceremonies publicly performed in accordance with caste usages and with the sanction of the caste people, to make out that such marriages are improper. They must satisfy the respective community and caste of the parties that such marriages are wrong.

Another important usage of the country is for a man to marry his sister's daughter. All the authorities whom I have consulted agree on the point. H. E. Sir T. Madava Rao, the Divan of Baroda, bears testimony to the prevalence of this custom. He says in answer to my enquiry:— "I am certain that in the Madras Presidency among the Deśastha Brahmins it is customary and legal for a man to marry his sister's daughter." Rao Bahadur Trimulrao Vyankatesh Inamdar, a retired Small Cause Court judge now residing in Dharwar, writes as follows:—

"The practice of maternal uncles marrying their nieces, *i.e.* sister's daughters, in the S. M. Country and Mysore, and the surrounding countries, is quite general, both amongst the Bráhmins and the Śúdras of all grades. When people are rich the maternal uncles take their nieces in marriage out of affection towards them. When they are poor, such marriages take place out of necessity to both parties; *i.e.* the maternal uncles cannot get brides without much expense, and the nieces' parents have no dowry to give to a [strange] bridegroom. If the parents of the nieces are poor and maternal uncles rich, the former insists upon the latter's taking the nieces in marriage, as the mother of the bride, *i.e.* the niece, cannot bear to see her brother's riches go to a [strange] bride. I know of no marriage *having been set aside* on the ground of maternal uncles having married their nieces, although disputes have arisen between some of such parties.

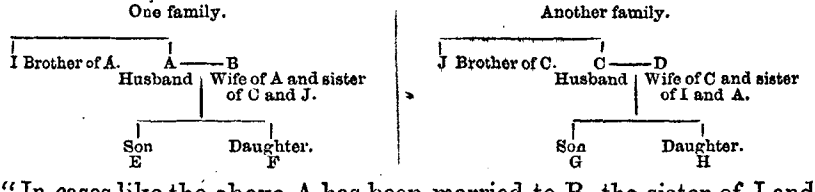


"In cases like the above A has been married to B, the sister of J and C, and C has been married to D, the sister of I and A. Such marriages are called ಎದುರು ಹೆಣ್ಣು ಕೊಡೊಣ *i.e.* समोरा समोर नवरीस देणें. A and C happen, each, to have one or more sons and daughters respectively, such as E and F, and G and H. A has an unmarried brother I, and C an unmarried brother J. A gives his daughter F in marriage

to J, the brother of B, and C gives his daughter H in marriage to I, the brother of D. If B or D happen to die before F or H (or any other sister they may respectively have) is married, F (or her sister, if any) is given in marriage to C; because she is the daughter of C's sister B. For the same reason H is given to A.

"But cases of the latter nature are very rare, as few families will be found so related to each other.

"It is not however to be understood that all maternal uncles are *obliged* to marry their nieces.

"There are so many cases throughout the country of maternal uncles having married their nieces, that it would be very laborious task to make a list of such parties. I think that about 8 per cent of the population contract such marriages."

At the time Steele's Summary was compiled, both these usages (namely, that of marrying a sister's daughter, and the daughter of the mother's brother) and others were prevalent in some of the castes consulted by him or by his assistants and correspondents.[1] In some cases his information is derived from written replies, and the observations gathered cannot therefore be exhaustive either as to the castes or as to their ceremonies. Those who examine the Summary by the light of local experience will easily find out mistakes and omissions. Indeed he himself held the work to be merely a preliminary one.[2]

A good deal might be said about the origin of these usages. Thus whether the Bráhmaṇas borrowed them from the Śúdras, or *vice versâ*; or whether they arose from local peculiarities or by contact with foreigners. We have examples of similar customs in ancient Indian History from which these may have been taken. There are also widely spread local usages sanctioning such marriages all over the country.[3] These are very interesting problems; but I have no space to go into them in this work.

I regret I am obliged to be brief. For both the time and space at my disposal are limited. Outsiders can hardly form a correct notion of how present usage has so changed the old structure that but little remains of the old texts; and this change must in each case be carefully ascertained from practice. Even in matters most dear to the Bráhmaṇas and the other twice-born classes, usage has fearfully twisted the Smṛitis. Thus in marriages, the bridegroom should, it is laid down, be free from defect of limb; he should not be *patita* (fallen into sin),

[1] See 1st Ed. pp. 167, 168.
[2] See his preface, page xvi.
[3] See Rev. J. F. Kearn's Kalyáṇa Śhatanku, Madras, 1868, pp. 33, 54, 59, 62, 68.

nor *klíba* (impotent), and he should be free from the ten *doshas* (blemishes). Usage has however made a clean sweep of this. Even the marriage of an impotent person in the higher classes is held good and binding; and the wife can get no divorce. Again, a man born deaf and dumb can get married. For this purpose the most sacred Bráhmaṇical rite—the *Upanayana*—is successfully tortured by usage. This rite, as is well known, is necessary to *make* one a *dvija* (twice-born), and before he can be married his *Upanayana* is essential, or he must become a *Vrátya*, and lose caste. For the purpose of the *Upanayana* he must be able to repeat certain *mantras*, and be initiated in the most holy *mantra*, viz., the *gáyatrí*. The *prayoga*-writers therefore lay down that the officiating priest is to recite the *mantras* near the boy; and custom has further invented the following symbolical ceremony. The *mantras* (sacred verses) are written in water; that is, the reed is drawn over a quantity of water describing the letters of the *mantras*, and that water is poured down the boy's throat, and he is transformed into a *dvija* (or twice-born). There are scores of such cases; and writers of *prayogas* (ceremonials) have composed rituals for the occasion. Thus in Gopínátha Bhaṭṭí, the ceremonial is what I have above described. But the *saṅkalpa* (determination) is altered from the usual form, sanctioned by the Śutras and Smṛítis (see part II., vv. 14, 15, pp. 16, 62), and made to fit cases where the future student cannot study from physical incapacity.

These deaf and dumb men are afterwards married in the ordinary mode, and the same *mantras* are recited. The answers which the bridegroom is supposed to give[1] are in this case repeated by the priest. Beyond animal instinct, there is no other element in such a marriage, and yet according to usage, such marriages are reckoned quite proper, and sanctioned by the community, although they are opposed to the old text laws.[2]

In the case of females, if they are deaf and dumb, lame, blind, or otherwise defective in limb, their marriage is discouraged by old writers.[3]

[1] I say this advisedly, for the ceremonial is in Sanskrit, which is not generally understood by the people; and when the married are children, they are simply the objects of a show which they can hardly understand.

[2] I say so because in the qualifications of the bride all old-text writers say she must not be feeble or defective in limbs. (See Yájñavalkya ch. i. 52; Manu ch. iii v. 4; and Vishnu ch. xxiv., p. 109 Cal. ed.). Again, the marriage rite contemplates the recitation of certain texts which, as containing the pledges to be made by the bridegroom on marrige occasions, are of the essence of the rite. Again, the prayoga writers say that in the case of the dumb and the idiot, everything relating to the marriage rite is to be done by the priest, save the acceptance of the bride, which is to be done by the bridegroom. But how can an idiot be capable of accepting a bride? And yet the marriages of such idiots appear to have been contemplated by Yájñavalkya when he declares that the blameless sons of idiots are qualified for inheritance (see ch. 2 v. 141).

[3] Yájñavalkya, ch. i. v. 52.

But custom now compels a father to get such a daughter accepted in marriage; although it is with difficulty that somebody is induced even to go through the ceremonial. Usage however is apparently quite content with this empty show, for such a marriage generally amounts to nothing more. The girl is thrown back on her father's family, and dies there from age or neglect.

The only department that now remains to be noticed is that of divorce. This, as I have said before, is not known to the Smriti writers. But usage has superseded texts in the case of all the lower castes of which I have given one or two examples before. In the summary given below, I have collected a variety of other examples. I shall therefore content myself by giving two more from our immediate neighbourhood Gujarat.

The first is from the Gujaráthi Kásara caste, wherein a wife, it seems, can get a divorce from her husband on the ground of ill usage. One Kasiram sued his father-in-law, complaining that he neglected to send his wife Itcha with her dower to his house. It was alleged that ill usage had compelled her to leave her husband. A decree was passed directing her to return; and this was upheld in appeal. But "on a petition from Itcha complaining of ill usage, the court of appeal called up the Patels of the caste, some of whom declared that ill usage was by the rules of the caste a valid ground, which was practised from the oldest time." This was opposed by the husband and by some Patels; but the court finding the ground to be sufficient pronounced a divorce.[1]

In another Gujarath case,[2] one Kasee sued to get possession of his wife, who pleaded that a divorce had been made between herself and the plaintiff by the caste in consequence of the latter's drunkenness and depraved conduct. And the Court held that the divorce pronounced by the caste was a valid one. It is thus clear that caste sanction according to some usages suffices for a divorce, and it is reasonable that it should be so.

Before concluding this section, a few observations on some cases decided in the Presidencies of Bengal, Madras and Bombay in regard to marriages are necessary. The first case is a Bombay case, namely, that of *Karsan Gojá* and *Bái Rúpá*, (Bombay High Court Reports, vol. II., p. 124). In this case the Reporter's head note runs as follows:—

"Held that a custom of Talapda Kolí caste, that a woman should be permitted to leave the husband to whom she has been first married, and to contract a second marriage (nátrá) with another man in his life-

[1] I. Borradaile 387. [2] I. Borradaile 410.

time and without his consent, was invalid as being entirely opposed to the spirit of the Hindu law; and that such marriage was void by reason of its taking place during the life of such husband, and therefore punishable, as regards the woman, under section 494 of the Penal Code; and that the man with whom the woman so married, having had sexual intercourse with her, was guilty of adultery under section 497."

The charges against the accused were as follows:—"The prisoners Karsan Gojá, aged about twenty-two, and Báí Rupá, aged about fifteen, Hindus of the Talapda Kolí caste, and inhabitants of the Urpár Parganá in the Surat Zilla, were charged before the Court of Sessions, the first (Karsan), under section 497 of the Penal Code, with adultery, in having had sexual intercourse with a person (Báí Rupá), who was, and whom he knew, or had reason to believe to be, the wife of another man (Jayarám Kesheva); second (Báí Rupá) under section 494, for having, while having a husband living, contracted a marriage which was void by reason of its taking place during the life of such husband." Of these they were severally found guilty, and sentenced to suffer certain punishment.

In Karsan's case, the first marriage of Rupá was proved; so was the *nátrá* marriage with the accused Karsan proved. The defence was that as a matter of fact there had been no intercourse during the three months after the *nátrá* marriage; and if there were, it would not amount to adultery as the parties had contracted *nátrá*. As regards the first point the trying judge held that the accused had had sexual intercourse, and on the second point he held that Rupá had not been divorced from her first husband, that she could not get such a divorce without his consent; that the Hindu law was applicable to the Kolí caste; that the caste rules, which were produced, and which showed that *nátrá* marriage regularly contracted should not be set aside, did not affect the point under consideration; that even if it were presumed that the general Hindu law in such a case had been superseded by custom, no circumstances were proved showing under what circumstances a divorce like this could be obtained; and he therefore held the second husband to be guilty of adultery, and the woman to be guilty of bigamy. The parties appealed to the High Court on the ground that Karsan had contracted *nátrá* according to the rules of the caste, and was guilty of no offence. The Court referred to the Sessions Judge for enquiry as to custom, and although it was found proved, they adjudged prisoners guilty, and sentenced them to reduced terms of imprisonment.[1]

[1] I give below extracts from the printed proceedings:—

Before deciding the case, the Court called for the finding of the Sessions Judge on the following questions:—

(1.) Is it permitted to a woman in the Talapda Kolí caste, for any and what reasons,

In another case in 1876, the Bombay High Court appears to have gone a step further, and ruled that "Courts of law will not recognise the authority of a caste to declare a marriage void, or to give permission to a woman to remarry." This was in a Telí caste from Khandesh.[1]

---

to leave the husband to whom she has been first married, and to contract a second marriage (nátrá) with another man in his lifetime and without his consent?

(2) Is the permission of the caste necessary as a preliminary to such second marriage (nátrá), or is such permission ever given subsequent to the contract; and if so, what is the mode in which it is given, and what is the effect which, when given, it is considered in the caste to have?

(3.) Quote any instances which may have occurred in the caste, within your own experience, in which a woman has contracted a second marriage in the lifetime of her first husband and without his consent; and mention the position which such a woman has occupied in the caste since such second marriage.

The Session Judge reported as follows:—"My finding on the first question is that it is proved by the depositions of the witnesses recorded that it is permitted to a woman in the Talapda Kolí caste to leave the husband to whom she has been first married, and to contract a second marriage (nátrá) with another man in his lifetime without his consent.

"My finding on the second question is that the permission of the caste is not necessary as a preliminary to such a contract of second marriage (nátrá); that permission is sometimes given or withheld subsequently to the contract, *i. e.*, on the complaint of the first husband; if she restore to him any property she may have acquired by her first marriage, she does not lose her position in the caste.

"My finding on the third issue is that the instances quoted support the view contained in the two preceding questions."

On these findings being received, their Lordships passed the following decision:—

"*Per curiam.*—Karsan Gojá has been convicted of committing adultery with Rupá, the wife of Jayarám, and Rupá has been convicted of contracting a marriage with Karsan, which is void by reason of its having taken place during the lifetime of Jayarám. The defence in the case of each prisoner is the same, namely, that a nátrá marriage has been solemnised between Karsan and Rupá, and that it is the custom of the Talapda Kolí caste that a woman may without the consent of her husband leave him, and contract a valid marriage with another man. We are of opinion that such a caste custom as that set up, even if it be proved to exist, is invalid as being entirely opposed to the spirit of the Hindu law; and we hold that a marriage entered into in accordance with such a custom is void. The convictions must be held up, but as the Judge has found the custom set up by the prisoner to be proved, we reduce the punishment awarded to Karsan Gojá and Báí Rupá to three months' and one month's rigorous imprisonment respectively."

[1] Indian Law Reports, I. Bombay series 347. The judgment in appeal says:—"The Court does not find it established that there is any valid custom by which a woman of the caste of the first accused can claim a right to marry again, because her husband is a leper, and without having obtained a release from him. The Court does not recognise the authority of the caste to declare a marriage void or to give permission to a woman to remarry. The wife in this case, and the appellant who performed the ceremony of remarriage, probably acted in a *bonâ fide* belief that the consent of the caste made the second marriage valid; but though that circumstance may be taken into account in mitigation of punishment, it does not constitute a defence to a charge under Section 494 of the Indian Penal Code, or under that section combined with Section 109 of the Code. The Court confirms the conviction; but as the Appellant has already undergone imprisonment for 25 days, it remits the remainder of his sentence."

Two issues are raised by these cases; first, what is the law applicable to the tribes and castes concerned in respect to their marriages, and secondly, what is the tribunal which is to enforce obedience to that law. On the first point I think the facts and authorities which have been above adduced, and others which will be succinctly given further on, make it clear that it is not the text law of the Śrutis or Smṛitis that applies to these castes.[1] They are Ati-Śúdras at the best. But even were they Śúdras, the result ought to be the same. For in regard to Śúdras, the Áryan authorities are very unfavourable to their reception into the Vedic circle. A Bráhmaṇa must not teach a Śúdra. He is commanded not even to hold converse with him by some writers. For the touch of a Śúdra, no end of penances are prescribed. Even when the privilege of performing certain rites was conceded to Śúdras, it seems to have amounted to little more than the performance of the mere ceremonies without the recitation of texts.[2] And here again, a kind of distinction appears to have been drawn by which the Śúdras were divided into two classes. But if one examines narrowly, very little substantial difference is to be perceived. They are still the servile class[3]

*N.B.*—The cases noted in the foot note at page 349 which are connected with the subject are—2 Bom. H. C. Rep. 117 (2nd Ed.), 124 (1st Ed.); *Reg.* v. *Manohar Raiji* (5 Bom. H. C. Rep. 17 Cr. Ca.); *Khemkor* v. *Umiashankar* (10 Bom. H. C. Rep. 381); *Rahi* v. *Govind* (Ind. L. R., 1 Bom. 97).

[1] Kiráta seems to be the old name for the people who now go by the name of Kolís. They appear to have been considered out of the pale of the four classes from their being called *Dasyus* (see Manu ch. x., vv. 44, 45). There is also a caste whose occupation is that of fishermen, and who are called Kolís. In that case too they would be out the pale of Áryanism as being *Antyajas*, see Yama Smṛiti v. 54 (p. 565) and Angirasa Smṛiti v. 3 (p. 554).

Again, a *Teli* (oilman) is described as a *pratiloma* offspring of a Śúdra from a Vaiśya woman (see Auśanasa Dharmaśástra vv. 22 and 23 p. 498). An oilman is placed on a par with the manufacturers of wine and *Antyas* in the Bṛihatparáśara ch. vi. v. 240 (pp 203 and 204, 2nd part).

[2] Śúdra Kamalákara (l. 32 p. 2 line 6) :—

एते संस्काराः सच्छूद्राणां । एवं वक्ष्यमाणमाह्निकाद्यपि तेषां नियतं असच्छूद्राणां विवाहमात्रम् ।

Translation :—These rites are for *sachchhudras* (superior Śúdras). Similarly the daily observances which will be hereafter laid down, are for them alone. In the case of the inferior Śúdras the marriage alone [takes place].

[3] In Laghu Vishṇu Smṛiti, vv. 105 and 106 :—

शूद्रस्तु द्विविधो ज्ञेयः श्राद्धी चैवेतरस्तथा ॥
श्राद्धी भोज्यस्तयोरुक्तो ह्यभोज्यो हीतरः स्मृतः ॥

Translation :—A Śúdra is known to be of two sorts :—*Śráddhi* [unauthorized to perform a Śráddha] and others; of these, food may be taken from the Śráddhi, but not from the others. In the Auśanasa Dharmáśastra v. 50 (p. 501) runs as follows :—शूद्रादेव तु शूद्रायां जातः शूद्र इति स्मृतः । द्विजशुश्रूषणपरः पाकयज्ञपरान्वितः ॥ सच्छूद्रं तं विजानीयादसच्छूद्रस्ततोन्यथा ॥ Translation :—One born from a Śúdra of a Śúdra woman is terme da Śúdra. If he is devoted to the service of the twice-born and the performance of the *Pákayajñas* is termed a Sat-Śúdra. One not such is an Asat-Śúdra.

In the Garuda Puráṇa, *Jambudvipa prastáva* section it is said :—

पूर्वे किरातास्तस्यान्ते पश्चिमे यवनाः स्थिताः ॥ आन्ध्रा दक्षिणतो रुद्र तुरुष्का अपि चोत्तरे ॥

standing on the borders as it were of the Árya community, but not forming an integral portion of it. They were indeed provided for in a speculative way by the Árya Code; but they had the ban of their class as a mark of exclusion from the regular Áryas. There were various rules laid down to mark their degradation, the principal being in the matter of intermarriages, the non-performance of Vedic sacrifices and ceremonies, and the descent of property to illegitimate members of families as of right. It is true that the division into four classes is older than Manu; for Manu notices it, and in his time the mixed classes, both *Saloma* and *Viloma*, had acquired considerable importance. But still there seems to be a clear line of demarkation between the first three classes and the fourth. And this must not be lost sight of by the historian and the administrator.

In our present social scale, there are classes below the Śúdras, viz., the Bhils, Kolis, Mahárs, Mángs, &c. These are popularly called Ati-Śúdras—meaning, exceeding even the Śúdras in lowness, &c. It seems that Mahárs are probably *Maháharas* (great thieves), and belong to that class of people termed the *Dasyus*, the enemies of the Áryas.

Some writers would place *Dasyus* among the *Pratilomas* (see Medhátithi on Manu). The Śúdra Kamalákar notices the division by some *Smṛiti* writers into the Śat-Śúdras, and the Asat-Śúdras, to which I have alluded before. The latter class would be the Ati-Śúdras, who are likewise termed Antyajás.[1]

Rúpa Náráyana, quoting the Bhavishya-puráṇa, thus speaks of the worship of Vindyhavásini by the different tribes of Mlechchhas and Dasyus:—"In this manner, that cruel [goddess] sacred to the *Kirátás*[2] is worshipped by various thievish tribes of Mlechchhas, without *mantras*" [Śúdra Kamalákar, Bombay Edition, leaf 10 p. 2 line 3]. This shows what mixture there has been.

The nonregenerate class thus seems to form a group by itself; and its internal economy is not specially provided for by the ordinary Árya writers on law. For when we come to consider what law is in the view of the early writers, we find that the Śúdras are always avoided

---

Translation:—On its borders live the *Kirátas* in the east, the *Yavanas* in the west, the *Andhras* in the south, and the terrible *Turashkars* in the north.

Pryáschitta Mayúkha thus quotes Apastamba:—

रजकश्चर्मकारश्च नटो बुरुड एव च।
कैवर्तमेदभिल्लाश्च सप्तैते अन्त्यजाः स्मृताः॥

Translation:—'*Rajaka* (washerman), *Charmakara* (leather-worker), *Naṭa* (the rope-dancer, &c.), *Buruda* (worker in *Bambu* wood), *Kaivarta* (kolis, &c.), Meda and Bhilla; these seven are termed Antyajás.'

[1] People born on the boundaries of the Aryāvarta.

[2] Kolis, Bhils, Gonds, &c.

by the twice-born classes.[1] Manu puts the Kolis amongst the Dasyus[2] (thieves). Kamalákara says (see note p. 37) that there are not even ceremonies for the *Asat-Śúdras*; but mere marriage. The Mahábhárata in giving the law for kings prohibits the performance of the duties of the Bráhmaṇas[3] by any other class, and especially by the Śúdras. Further on Vyása himself, as interpreted by his commentator, limits the religious acts for the Śúdras or Dasyus to making gifts to the twice-born alone.[4] While all that is thus left to Śúdras is to make gifts to Bráhmaṇas, the Bráhmaṇas are commanded not to accept their gifts on pain of becoming Śúdras by such acceptance.[5]

Such being the state of the Śúdras and the Áti-Śúdras in respect to the performance of religious ceremonies according to the old Áryan writers, I now proceed to examine into the Smṛiti-texts, if any, applicable to their marriages. In both the cases above mentioned, there are no texts cited which govern the present marriage practices of the Śúdras and of the Ati-Śúdras. And the Árya Law (or the Hindu Law as it is now called) has, if I may with deference say, nothing to do with them. They are regulated by usages of the country and of castes and families, and these alone ought, it seems to me, to be always ascertained and followed so far as respects the first question with which I started.

As regards the second question, namely, the tribunal which finally decides these matters socially. So far as history goes, it appears that

[1] Manu ch. iv., vv. 61, 80, 81, 84—86, 99. Aṅgiras Smṛiti, vv. 49, 50, p. 558, v. 54 p. 559; Ápastamba, ch. iii. vv. 1—2 p. 571.

[2] Ch. x., 44.

[3] See Mahábhárata Śantiparvan Rájadharma, ch. 65 v. 9 :—

चातुराश्रम्यधर्माश्च वेदधर्माश्च पार्थिव । ब्राह्मणेनानुगन्तव्या नान्यो विद्यात्कदाचन ।

Translation :—The duties of the four orders and those laid down by the Vedas should, oh king! be followed by Bráhmaṇas; no one else shall ever know them.

[4] See Mahábhárata Śántiparvan Rájadharma ch. 65 v. 21, which runs thus :— दक्षिणा सर्वयज्ञानां दातव्या भूतिमिच्छता । पाकयज्ञा महार्हाश्च दातव्याः सर्वदस्युभिः ॥ Translation :—'He who wishes prosperity should give presents on account of the different sacrifices—so all the Daśyus should perform the *Pákayajna* which are important.' The commentator Nílakaṇṭha on this verse says :—महार्हा इति पाकयज्ञमुद्दिश्य ब्राह्मणाय धनं देयं श्राद्धमपि आमेन हिरण्येन चेति ज्ञेयम्. Translation :—Wealth should be given to Bráhmaṇas on account of the *Pákayajna*. The Śráddha too, it should be understood, is to be performed by him by [gifts of] uncooked food and wealth. Kamalákara too in connection with these verses says in his Śúdra Kamalákara l. 15 p. 1—यत्तु भारते राजधर्मेषु – – – – – म्लेच्छादीनां श्राद्धविधानं तदपि सजातीयभोजनद्रव्यदानादिपरम्:—Translation :—'As to the *Śráddha* rite that is laid down for Mlecchhas and the like in the Rájadharma (duties of a king) in the Mahábhárata, it means the feeding of one's castemen, gifts and the like.' The departure from the plain meanings of words involved in this interpretation is justifiable in view of what Vyása himself has said in the earlier part of the same *Parvan*, see ch. 60. v. 37, viz., मन्त्रः शूद्रे न विद्यते. Translation :—There is no recitation of a holy text in the case of a Śúdra.

[5] See Part II. p. 56, lines 10 and 11 p. 57, line 1.

marriage and divorce disputes have always been decided by the caste Punchayats, or Mahajans, as the case might be.[1] Bombay Regulation II. section 21 cl. 1st, as far as it is yet unrepealed, does not permit of caste questions being litigated in courts.[2] The Bombay High Court have held that "it would be an interference in a caste question within the meaning of that section, if a court were to make a decree ordering the members of a caste to re-admit a member to a participation in caste communications and privileges."[3]

There is happily no matrimonial court for Hindus, and according to their usages and traditions it seems that, unless the Government deems it proper to invoke the aid of the legislature, it will be for the castes to decide whether their members are married or divorced according to the proper usages. According to the constitution of Hindu society, the Bráhmaṇas will take the lead; but in the case of other castes, they (the Bráhmaṇas) can only act as advisers. Agreeably to such usage, the granting of a divorce, or the recognising of a divorce as one properly made, is the duty of the caste. In some cases the mere will of either party or of both parties suffices, and there the caste can do very little, except to accept what has been done. Even Kamalákara recognises divorces made by either of the parties.[4]

[1] See the cases previously cited, pp. 13, 34; also Steele's Summary pp. 85 to 158, and pp. 166—169, 170, 171; and all the authorities noted in the marriage summary at the end of Appendix IV. Section 1.

[2] The unrepealed portion runs as follows:—The jurisdiction of the Civil Courts shall extend to the cognizance of all original suits and complaints of a civil nature, it being understood that no interference on the part of the court in caste questions is hereby warranted, beyond the admission and trial of any suit instituted for the recovery of damages on account of an alleged injury to the caste and character of the plaintiff arising from some illegal act or unjustifiable conduct of the other party.

[3] Printed judgments for 1878, p. 235, *Narottam Bhagvan* v. *Mithálal Káhándas and 42 others*; see also I. L. R. 2 Bom. 470, 476.

[4] See Śúdra Kamalákara l. 74 p. 2 lines 4 to 8, viz.:—

कल्पतरौ देवलः। नष्टः प्रव्रजितः क्लीबः पतितो राजकिल्बिषी। लोकान्तरगतो वापि परित्याज्यः स्त्रिया पतिः॥ मृते भर्तरि जीवे वा स्त्री विन्देतापरं पतिम्। सन्तत्यनाशार्थतया न स्वातन्त्र्येण योषितः॥ नारदः। अष्टौ वर्षाण्युदीक्षेत ब्राह्मणी प्रोषितं पतिम्। प्रसूतिका तु चत्वारि द्वे समे ह्यप्रसूतिका॥ न शूद्रायाः स्मृतः कालो न च धर्मव्यतिक्रमः। विशेषतो ऽप्रसूतायाः स्त्रियाः संवत्सरास्थितिः॥ अप्रवृत्तौ स्मृतः काल एष वेषितयोषिताम्। जीवति श्रूयमाणे तु स्यादेष द्विगुणोऽवधिः॥ प्रजाप्रवृत्तौ नारीणां वृत्तिरेषा प्रजापतेः। अतोऽन्यगमने स्त्रीणामेष दोषो न विद्यते॥

Translation:—As cited in the Kalpataru, Devala says:—'A woman may abandon her husband, if he happens to be missing, or to become votary of the fourth order, or to be one impotent or degraded, or an offender against the king; or when he is dead. A woman may, for the continuance of the line and not out of wantonness, take to another husband whether the first husband is alive or dead.' Nárada says:—'A Bráhmaṇí ought to await [the return of] her husband, who has gone abroad, for eight years; a woman who has become a mother, for four years, and one not a mother, for two years.' No period [of waiting] is laid down for a Śúdra woman, nor is there any transgression of duty [in her marrying again], particularly in the case of one not a mother. In the case of

Steele's Summary likewise gives cases in which it is open to the parties to effect a divorce. The consent of the husband is not always contemplated. The sanction of the caste alone appears to suffice.[1] It would seem therefore that those who have to administer laws according to the usages of the country, must take such usages as they are. It would be very desirable if they were better. But we cannot, I say with all deference, help ourselves in this matter. In each case one must depend on the usages of the caste.

Thus in the case of Karsan Gojá, above mentioned, the trying judge said, he could think of no case of such irregular marriages save in the province of Malábár. But general as well as Indian history afford numerous examples of the same kind.[2] It may be unfortunate that these things exist. It may equally be unfortunate that hundreds of such caste usages by which the people are guided in their daily transactions should prevail, but so they do *mutatis mutandis* in all countries; and unless the law is altered, I cannot conceive how people can be blamed for acting in accordance with what they know to be the law, and in accordance to which they have acted for thousands of years. Kolís and similar tribes are considered non-Áryan by several writers. Others have made attempts to include them within the scheme of

---

women of the remaining classes [viz., the intermediate two,] the period of waiting is one year. If [the first husband] is reported to be living, the period of waiting is double. This is the rule laid down by Prajápati for women is respect of procreation. Therefore, in resorting to another [husband under the said circumstances] there is no sin.

[1] Steele, p. 170 :—"Among the lower castes, widows and wives under certain circumstances are allowed to form the inferior contract termed Nikah, Pat (P.) or Oorkee (D.) These circumstances are if the husband proved impotent (76 C. P. S. K.); or the parties continually quarrel (72 C. P.); if the marriage were irregularly concluded; if by mutual consent the husband breaks his wife's neck ornament, and give her a *chor* chittee (K. P.) After which divorce, with the concurrence of the caste, the wife may form Pat with another man, S. : sometimes even without their concurrence. And if after 12 years' absence a husband continue unheard of, his wife may form Pat : should he afterwards return, she must return to her first husband; or live with either at her option, the party deserted being reimbursed his marriage expenses, K. D."

Id., p. 174 :—"In the lower castes, besides adultery, &c. above mentioned, the husband's impotence or simple disagreement of the parties, even against the advice of the caste, is sufficient to cause a divorce, D. The husband breaks his wife's Mungalsootr, and tears her saree, when she is at liberty to form Pat with another, K.P.D."

[2] See Mayne's Hindu Law and Usage pp. 51, 52; Indian Antiquary vol. VI. pp. 251 to 261 (Polyandry in Northern India); Ibid. vol. VII. p. 86 (Polyandry in the Punjab); Ibid. vol. VIII. p. 314 (The Weddas of Ceylon); Bhutal Pandye's Law of Alyasantana translated by Rámaswamy Naidu; Nelson's View of the Hindu Law as administered by the High Court of Judicature at Madras, pp. 93, 99, 141 to 146 McLennan's Studies in Ancient History, Primitive Marriage, &c. pp. 139 to 156; Consanguinity in Marriage, Fortnightly Review, November 1865, pp. 710—30; Endogamous and Exogamous Marriages, Contemporary Review 1873, pp. 412—426; Levirates and Polyandry, Fortnightly Review, May 1877, pp. 694—707; The Northern Barrier of India, by F. Drew, pp. 263—265.

Áryan classes by either calling them *Ati-Śúdras* or *Mlechchhas*, or by adopting the fifth class, which was at one time in the contemplation of the Vedic writers. This would probably be the class whom Patañjali would call *Niravasita-Śúdras*. But for practical purposes, such as marriages, &c., the religious scheme of Hindu ceremonial has left them out altogether. Were it otherwise, all the nations of the earth would have to be included in the same class.[1]

These low caste Hindoos, like Kolís and Telís, are not therefore within the ordinary pale of the Hindu law. Their family relations, their ceremonies, and even their gods are determined by custom and usage. It is a matter of consideration, therefore, whether they can be punished civilly or criminally for disobedience to a law to which they owe no allegiance.

A few remarks on other criminal cases may not be out of place. The case noted below[2] of *Sagái* wives in Behár as opposed to *Bihái* wives resembles our *nátrá* in Gujaráth and *Páṭa* in the Dekkan as opposed to *lagna*. The custom of divorce set up in this case does not appear to have been proved. But if the sanction of the caste by payment of a fine or otherwise had been obtained, I presume it would have been sufficient. A marriage which is made by the application of a little red powder to the future wife's forehead, can surely be unmade by its being wiped off if the community to which the parties belong recognise the propriety of such a proceeding.

In another case[3] (which came from Assam) wherein the husband sued for restitution of conjugal rights, it was pleaded that there was a divorce and a deed executed to that effect; the Munsif held the deed proved; but the District Judge ruled that the custom of Assam proved by the deed could not override the Hindu law, which forebade divorce. The

[1] See the following curious extract from Steele's Summary of Castes and Customs, 1st Ed. p. 124 :—

"The Moossalmans and other foreign castes (called Yewun) are inserted in this place by the Brahman compilers. Their origin, as fabulously told in several books, was from four causes :—From the Dyty, wife of Kusyap Rishee, from the fifty sons of Wiswumit Rishee who were cursed by him ; from the cow Kamdhenoo given to Wasisht Rishee by Brahm ; from Parseemoond and Ardhmoond, sons of Sagur Raja, to whom Wasisht Raja presented the Sagur country (including Persia) to the westward; from Kshatriyas and other Hindoos who have from time to time lost caste (Wishnoo Pooran).

"During the 4000 years of Kaleeyoog, the sects of Yewun have increased to a great number. They reckon several thousand prophets and saints whose tombs are endowed with spiritual energy (Kurâmat) at the present day. The Chinese are a low caste of Yewun who do not refuse any kind of food," and "the Yewun of Bokhara are accused, like the Portuguese, of making proselytes by force."—"They distinguish three kinds of Yewun in Hindoostan, Parsee, Moossalman, and Iswee," including English, French, Portuguese, &c. These castes refuse no kind of occupation."

[2] See 3 Calcutta Law Reports 410 (*Bissuram Koiree* v. *The Empress of India*).

[3] Ind. L. R. 3 (Calcutta series) 305, *Kudomee Dossee and others* v. *Joteeram Kolecta*.

High Court corrected this, and sent back the case for a finding as to the custom set up. But it seems to me that when there was a deed, no reference need have been made unless the deed had been denied. For, so far as the history of Assam shows, there is but little Hindu law known there, and indeed in several divisions of Bengal and Assam, marriage customs are as different from those contemplated by Áryan writers, whether of texts or glosses or digests, as they can possibly be conceived. Half the world, it is said, does not know how the other half lives. In India, where intercommunication is still so slow, and mass education so defective, the people go on in their old grooves, altered and fashioned by their local customs and usages, which have been sanctified by time and confirmed by habit.

Again, it is worthy of consideration whether it is just for courts of law to disregard well established customs and national usages on the ground of morality and public policy. The laws of marriage for the different castes are their own usages, and they can only be altered either by the castes or by the legislature.

Morality is a very elastic term. History shows that it is a very unsafe guide; and courts in India ought especially to be very careful. An example of morality working unequally may be seen by referring to recent reports of two Madras cases, viz., *Iravanni* v. *Ittápu*,[1] and *Chinná and ten others* v. *Tegarái*.[2] In the first case a common Malabar squabble formed the subject of discussion; in the second, the rights of certain dancing girls attached to a pagoda establishment. As regards the morality of both classes, I should probably not differ at all. The one is a system of open and the other of clandestine prostitution. But I should be loth to impose my own moral convictions on two numerous communities, which have existed from time immemorial. In fact, my unwillingness to dictate would be in the direct ratio of the intensity of my convictions. The growth of customs may be slowly changed, but it must come from within, and not from without, if the progress is to be genuine. And it strikes me in reference to the above two cases that when the judges speak of *family* quarrels, in the first case, the word 'family' is only used in the *Malabar* sense. For there can really be no family according to our notions when the relations of man and wife are perverted. Yet the courts do justice to the children of such people, and decline the duty in dealing with the temple girls on the score of morality. I confess I cannot see the difference between the two cases. And again, if the dancing girls had previously a legal position,[3] when was it changed by a special law? They are still the members of a religious establishment.

[1] In L. R. I. Madras 153. [2] Id. 168.

[3] See 2 Madras H. C. Rep. 56 (*Chalakondee Alasami* v. *Chalakonda Ratnachalam*); v. 5 Madras H. C. 161 (*Kámákshi v. Nagarathnam*)

Moreover, unless the safe guidance of caste usages and customs be left untouched, I do not know what a state of confusion we may be landed into. Thus in a recent case,[1] one of the Calcutta High Court judges has held that—

"Marriage between parties in different subdivisions of the *Śúdra* caste is prohibited unless sanctioned by any special custom, and no presumption in favor of the validity of such a marriage can be made although long cohabitation had existed between the parties."

In a Madras case[2] it has been held that a marriage between two sub-divisions of the Śúdra class would be valid by Hindu law. In the course of his judgment, Mr. Justice Holloway observes:—"Further, I am clearly of opinion that the classes spoken of are the four classes recognised by Manu, and not the infinite subdivisions of these classes, introduced in the progress of time."

This, I think, ignores Manu's code itself. For the provisions of chapters ix., x., and xi. show that the whole system was speculative, and was never introduced anywhere as a whole. As a matter of fact neither Manu nor any other Smṛiti has had legislative force at any time as I have elsewhere explained; and before going into the wide, uncertain and unexplored field of Hindu law, we ought to seek for the parties' customs in such matters. Our Elphinstone code rightly places the usage of the country (which includes caste and family usages) above the Hindu law. As usage goes, the Bengal judgment in the case of *Narain Dhara* v. *Rakhal Gain*, guardian of Jonardon, seems to be the correct one.

The last case I have to speak of is that of *Ramangavdá and two others* v. *Shivaji Rayaji Patil*.[3] In this case the court hold that by Hindu law, the marriage of a man with his sister's daughter is incestuous.

It does not appear whether the customary law on the point was questioned by the opponent from the first. But looking to the testimony of such eminent persons as Sir T. Madava Row and others,[4] I take that to be impossible. As a question of dry law, the above

---

[1] Ind. L. Rep. 1 Calcutta 1, (*Narain Dhara* v. *Rakhal Gain, guardian of Jonardon*).

[2] I. Madras H. C. Rep. 478, (*Pandaiya Télaver* v. *Puli Télaver*). See on the other hand Elphinstone's India (3rd ed. p. 84).

[3] Printed Judgments of the Bombay High Court for 1876, pp. 73, 154. The authorities stated are:—

(1) Manu, chap. iii., pl. 5;
(2) Yájñavalkya, i., 52;
(3) Vijnañeśvara Áchárakánḍa, f. 6. p. 1, l. 15;
(4) 1 West and Bühler, p. 141;
(5) Vyavahara Mayúkha, chap. iv., sec. v., pl. 29;
(6) Macnaughten Hindu Law, 61, 2nd ed.;
(7) Steele, pp. 33, 36, 165, 168.

[4] See p. 425 above.

authorities resolve into two—thus the first[1] and sixth[2] are one and the same: namely, Manu, III., 5, which says that the bride should be "an *asapiṇḍa* of the mother." Beyond this, the translation of Sir W. Jones is not quite accurate. Similarly, two,[3] three[4] and four[5] are one and the same. Authority five[6] refers to the subject of simple adoption and of *Dvyá mushyáyaṇa* adoption, and the subject of marriage of the adopted with a bride from the families of the natural father and mother, is brought in from a text of Gautama to prove that there is a simple adoption as opposed to a Dvyámushyáyaṇa one. The seventh refers to four pages of Steele's Summary of Castes and Customs.[7] It will be seen that the passages refer to different districts. So

[1] Manu, III., 5 :—असपिण्डा च या मातुरसगोत्रा च या पितुः ॥ सा प्रशस्ता द्विजातीनां दारकर्मणि मैथुने ॥

Translation :—She who is not a *sapiṇḍa* of the mother, and who is not of the same *gotra* with the father, is proper for the twice-born to marry.

[2] W. H. Macnaughten's Hindu Law, p. 61, 2nd Ed. :—" The relations with whom it is prohibited to contract matrimony are thus enumerated by *Manu* : ' She who is not descended from his *paternal* or *maternal* ancestors within the sixth degree, and who is not *known by her family name to be* of the same same primitive stock with his father or *mother*, is eligible by a twice-born man for nuptials and holy union.' [This is Sir W. Jones' translation based on Kullúka's comments on the verse in the preceding note.]

[3] Yáj I. 52. अविप्लुतब्रह्मचर्यो लक्षण्यां स्त्रियमुद्वहेत् । अनन्यपूर्विकां कान्तामसपिण्डां यवीयसीम् ॥

Translation :—He who has not lost his *Brahmacharya* (chastity), let him marry a girl of [good] parts who has not been accepted or enjoyed by another, [who is] attractive in his sight, who is not a *Sapiṇḍa* of him [and is] a junior. [See above, Part II. p. 167.]

[4] Vij., f. 6, p. 1, line 15 :—

असपिण्डाम् समान एकः पिण्डो देहो यस्याः सा सपिण्डा न सपिण्डा असपिण्डा ताम् । [This is merely a dissolution of the compound *asapiṇḍam* in the verse in the preceding note, showing that " *asapiṇḍa* is one whose body is not the same."

[5] This is an amplification of the same word by Vijñaneśvara :—1 West and Bühler p. 141 :—" Vijñaneśvara says (Áchárakánda f. 6, p. 1, line 15), when he explains the verse I., 52 of Yájñavalkya in which it is declared that a man shall marry a girl who is nōt his sapiṇḍá :—

असपिण्डा । समान एकः पिण्डो यस्याः सा सपिण्डा । न सपिण्डा असपिण्डा ताम् । सपिण्डता चैकशरीरावयवान्वयेन भवति । तथाहि पुत्रस्य पितृशरीरावयवान्वयेन पित्रा सहैकपिण्डता । एवं पितामहादिभिरपि पितृद्वारेण तच्छरीरावयवान्वयात् । एवं मातृशरीरावयवान्वयेन मात्रासह । तथा मातामहादिभिरपि मातृद्वारेण तथा मातृष्वसृमातुलादिभिरप्येकशरीरावयवान्वयात् । तथा पितृव्यपितृष्वस्रादिभिरपि । तथा पत्यासह पत्न्या एकशरीरारम्भकतया । एवं भ्रातृभार्याणामपि परस्परमेकशरीरारब्धैः सहैकशरीरारम्भकत्वेन । एवं यत्र यत्र सपिण्डशब्दस्तत्र तत्र साक्षात्परंपरया वैकशरीरान्वयो वेदितव्यः ॥

[6] See above Part II., page 61, lines 25—40, and p. 62, l. 1.

[7] I quote from the first edition of Steele the material passages which bear on the present question :—

"5. Intermarriage within the Sugotr Supinda is forbidden, and with a female of another caste, P. C. (Mit.), and besides the Wirood Sumbund or prohibited degree of connexion within seven degrees, marriage is forbidden with the following Usogtor

far as marriages like the one in question are concerned, it is stated that "Intermarriage with cousins and nieces is prohibited, but occasionally takes place" (p. 165). D. refers to Southern Maratha Country. It may be seen also that intercourse would be incestuous only where the marriage was between *Sagotras* or between different castes. Again, Steele is not correct in saying that the marriage is annulled even in such cases, for except where the parties belong to different castes, there is no annulment of marriage. If the marriage be of *Sagotras*, it stands—though it cannot be followed by intercourse. As regards *Sapiṇḍas*, no such restrictions appear. And Áśvalayana, Baudháyana, Devala, Bṛihaspati and others distinctly direct local usages to be observed in regard to marriage and other matters. B. S., or Bhálachandra Śástri, is one of the authorities quoted by Steele in respect to prohibited degrees. It is a pity his opinion in original is not given; because in Bhálachandra Śástri's own caste, marriage with a maternal cousin is universal. In regard to this particular class of marriages, the law in the Southern Marátha Country, Mysore, and the South of India seems to be clear. It seems to be a pity that marriages like Ráyáji's, celebrated many years ago, and apparently with the sanction of the community, should be disturbed. It is now conceded that even the Mitákshará and Mayúkha are not binding as a whole, and that remark would apply with still greater force to Manu, Yájñavalkya and others, whose works are now almost obsolete, and have had no legislative force at any one time in history.

---

Supindu connexions : a parent's sister's daughter, a mother's brother's daughter, and a sister's daughter. (Page 33.)

Should the parties prove to be within the prohibited degrees of marriage (see paragraph 5), the wife must be repudiated with maintenance, and expiation performed. B. S. (Page 36.)

The parties must be of the same caste and different Gotr or family stock, P. Bráhmaṇas are prohibited from intermarrying with all Supindu relations, and descendants of their Rishi's brothers, and connexions within 3 or 4 degrees, P. Intermarriage with cousins and nieces is prohibited (53 C. P.), but occasionally take place from poverty, P. D. So with aunts and their children, Sugotras and Supruvhurs, and of course with daughters, mothers and sisters, D. A brother's children may, however, marry sister's children not being Sugotr, D. First cousins intermarry in the Wys caste, D. Komtees give their children to nephews and nieces, D. Other exemptions in particular sects of Bráhmans and other castes are mentioned, P. D. (Page 165.)

Among the Bráhmans and higher castes, if it be discovered that the parties were of the same Gotr, or different castes, the marriage is annulled, the wife being maintained by the husband, but connexion would be deemed incestuous (the husband must maintain her as a sister), 2 C. P. S. D.

The woman and her children are permanently excluded from caste, D. Minor omissions of ceremonies are followed by penance only, D. In the lower castes, in which previous inquiry is not so strict, if the discovery be made before the girl's Shanee, or even before the birth of children, she may be married to another by Pat, S. D.

The marriage is not annulled by the discovery that the parties are of the same koolee, 10 C. P. (Page 168.)

## SUMMARY OF MARRIAGE CUSTOMS IN DIFFERENT PARTS OF INDIA.

[In several instances, references alone are given, as the space at my disposal is limited.]

Southern India (including Berars, Central Provinces, and the Bombay and Madras Presidencies):—

The following are extracts from the Gazetteer for the Haidarábad Assigned Districts, commonly called Berar, by A. C. Lyall, Commissioner of West Berar: Bombay, 1870:—

"The custom of widow marriages prevails universally among the agricultural communities, and perhaps more or less among all others, except the Bráhmans, the north country trading classes, and the highest families of any caste. Divorce by mutual consent and deed of separation is also permitted, and the divorced woman marries again. These irregular unions are called *pat* marriages; but they are quite reputable, and the offspring is legitimate. Very primitive and grotesque connubial rites prevail among the Banjáras and Mánbháus, who have strongly coloured their ceremonial with that shade of mockery which still tinges slightly all marriage rejoicings" (p. 186).

Again:—

"In some castes, even Bráhmans, marriage is allowed with maternal uncle's daughter, and this concession grows more common as the social grades are descended. You may marry your deceased wife's sister, but not your dead husband's brother; though among the Gonds this latter kind of match does occur, and even among some of the Banjáras.

"But, perhaps, the most curious incident of the system is, that in certain communities similarity of *worship* is a bar to connubium. Before concluding an alliance the Kunbi and other tribes look to the *dewak*, which means literally the deities worshipped at the marriage ceremonies; the fact being that certain families hold in honour particular trees and plants, and at marriage time branches of these trees are set up in the house. It is said that a betrothal, in every other respect unexceptionable, will be broken off if the two houses are discovered to pay honour to the same kind of tree. Follow this vein of inquiry lower down, and you find the custom more distinct among the Gonds in their wilder state. In the Wún district the Gonds are divided into tribes, which are again sub-divided into *Gotras*. The Gotras have each a distinguishing name, or surname, to all members; while Gotras fall within one or another of four classes of worshippers:—

(1.) Those who worship 4 gods.
(2.) „ „ „ 5 „
(3.) „ „ „ 6 „
(4.) „ „ „ 7 „

"Now, a marriage cannot, of course, take place between two persons having a common surname; but it is also declared that neither is marriage allowed between two of the same worshipping class, though surnames be different" (pp. 187, 188).

The following in regard to the Wún district shows that the Rákshasa form is still extant:—

"The males and females work separately and at a distance, and are never associated in their labour. A Gond male desiring to marry, gathers intelligence as to what lady of the adjacent villages he should make the object of his choice. This being done, he, attended by his comrades, resorts to jungles where his wife elect is working, in company with her female relations and friends. Coming in sight, the bridegroom, taking

advantage of the unprotected state of the women, working as they do far away from their homes and male relations, pursues them. His friends will not aid him to carry away the bride by force, unless he, unaided, succeeds in touching the bride's hand before she finds a safe shelter in her village. Here it must be told that the women often fight every inch of ground with their pursuers, inflict the most serious hurt, and sometimes most shameful defeats. The contest continues even after the bridegroom has touched the bride's hand. If the fight is drawn to the skirts of the village, the male portion joins the females, and pursues the enemy back to their village. But the touching of the bridegroom once effected, the marriage contract is sealed, and cannot be broken" (p. 188).

Marriages within the *gotra* and out of it are illustrated below (pp. 188, 189) :—

"The custom of marrying an elder brother's widow, which still survives among the aborigines, is supposed to be a lingering relic of the primitive system of polyandry or kinship through females. However, as society progressed, and these groups intermarried, paternal descent became more certain and trustworthy, for the system of capture gave way to peaceful betrothal, while property in womankind became more secure; and at that stage female kinship gave way to the latter law of agnatic kindred to the female head of each family or group. Here we get the *Gotras* or Gotes fully developed out of the tribe, just as we see them throughout Hindusthán to this day, and notably among the Rajpúts. When one of these *Gotes* or families departs from its country, and settles afar in foreign lands, it soon separates into different Gotes, by reason of the difficulty of obtaining wives from outside. Berar affords one or two instances of this process among the offshoots of up-country tribes which have migrated down hither. The emigrants were very soon entirely cut off, and alienated from the parent tribe left in Upper India; and whereas in their own country they must have gone to *another* tribe for wives, here they form a caste of their own, within which its members must marry, exchanging alliances between the different newly formed sub-divisions. Of this process the *Puars* of Berár and the Nagpur province afford a good example; and I believe that the Rajbansis, and all the other isolated settlements of Rajputs in Berár and the Dakhan, follow the same rule. But the ancient family of the Jádow Rájás of Sindkher still intermarries exclusively with the clans of Rajputana" (p. 189).

Divorce and Second Marriages :—

"Widows can, on the death of their first husband, marry again by a *pat* marriage. A man can at one and the same time have only one 'lagan' wife alive; but he can have several *pat* marriage wives" (p. 201).

Again :—

"Except the Brahmanas, the Vaisya Sonárs, and one or two other castes, all Hindu women here are allowed to make a second marriage. Some of the deshmukh families, who hold their heads high, forbid it also. There is this difference between a first and second marriage. In the former, if a woman goes wrong, her husband can give her a *farkhattinámá* or bill of divorce; whilst if he goes wrong, she has her redress. But in the second either may dissolve the marriage" (p. 211).

Curious customs of the Mánbháus :—

"The Mánbháus, though vowed to celibacy, have been accused of inchastity. Under full vows they are said to be allowed to marry, the ceremony being of two kinds. According to one rite the couple roll about before the *mahant* until they touch, which touch unites them for life. According to the other, both persons go

before the mahant with their begging wallets, which the priest ties together, and the marriage knot is fast" (p. 214).

The following account of a marriage in the Ellichpur district may be compared with similar ceremonials in other parts of India :—

"The boy and family go to the girl's village, and he and the girl are covered with *haldi* (turmeric), and then wash, and worship the Kulswami and the god Ganpati. In the evening Brahmanas hold a sheet up between them, and at the time fixed jawári is thrown on them by the people present; the sheet is let drop and the marriage is complete. The people are feasted for four days, during which time a string called 'kankan,' which on the first day is tied on the girl's wrist, remains there. Presents are given to the bride and bridegroom, who then go to the latter's house, where they swear mutually to be faithful, and the husband to protect the wife, and the wife to be obedient. The bride remains eight days in her husband's house; then there is a festival in propitiation of 'Devi,' called 'goudhál,' and the bride returns to her parents" (p. 218).

CENTRAL PROVINCES.

In reference to these I would refer to the following :—

Central Provinces Gazetteer, by C. Grant, Esq., 1870; women divorcing themselves at pleasure, and marrying several husbands in succession (in Bhandara), p. 62; Kanwar marriages beyond the *got*, and the changes that are occurring in reference to castes and ceremonies in the community, p. 107; Gond marriages of seven kinds, and widow marriages, the widow simply walking over to the man's house; or marrying her husband's younger brother, pp. 276, 277. In reference to the same, see also "Papers relating to the aboriginal tribes of the Central Provinces," by the Rev. S. Hislop, edited by R. Temple, C.S.I., 1866, pp. 9, 23.

*Hoshangabad* :—Report on the Land Revenue Settlement of Hoshangabad, by C. A. Elliott, Bengal C. S., Allahábád, 1867, pp. 259—262. Five forms of marriage among Kooroos: (1) *Shúdí* (regular marriage), (2) *Lumjuna* (where the bridegroom works and lives in his father-in-law's house), (3) *Boloni* (where the girl goes to her lover's house), (4) *Pat* (widow-marriage), and (5) marrying another man's wife by mutual consent. See also Journal of the C. B. Antiquarian Society, pp. 45 to 48, vol. 1.

*Narmada* (Nerbudda) Division, Nursingpore District :—Improper marriage allowed among Kaonras and Kerars. Widow marriage with a younger brother of the husband allowed: see Report on the Land Revenue Settlement of the Narsingpore District, by C. Grant, Esq., B. C. S., 1866, Nagpore, paras. 21—24, page 27.

*Mandlah* :—Paper relating to the Settlement of Mandala Districts by Captain H. C. E. Ward, 1870 (pp. 136—140, 157).—Shadee Bundonee (a sort of mixture of *Rákshasa* and *Gándharva*,) p. 139; love marriages of a curious kind, p. 139; widow marriages with the deceased's younger brother, p. 140; marriages consummated in jungles and not in houses, p. 157.

*Raipore* :—See Paper relating to the Settlement of the Raipore District, Chettigarrh Division, 1869, by J. F. K. Hewitt, Esq., B. C. S., Nagpore. Tying up clothes of the couple and going seven times round a pole constitutes marriage (page 52) ; widow marriage almost universal (*Id.*) ; conjugal fidelity little thought of (*Id.*)

*Jubbulpore* :—See Papers relating to the Settlement of the Jubbulpore District : of the Jubbulpore Division, by Major W. Nembhard and A. M. Russel, Esq., Nagpore, 1869 ; issue of the married wife and concubine (if of equal caste) equal ; a brother marries the widow of a younger brother, p. 25.

BOMBAY.

The following notes will explain some of the caste customs in the Bombay Presidency :—

"In Gujarat the Gotra relationship is observed when known. But it is said that in some castes of Bráhmans whose numbers are not increasing suitable matches are scarce. And in some cases the rule of relationship on the mother's side has been so far disregarded that first and second cousins have intermarried. Among the lower castes marriage is allowed if the families are not shown to be related within three generations."

There are different customs in regard to dowry. The grant of a dowry by the bride's father is to some extent held dishonorable. This is so in the Dekkan. But the usage is now quite common amongst the highest castes ; and all the details are settled generally by the boy's side with the cupidity of hucksters. Another mode is :—

"The return marriage system is called *sátu* or bargain. This arrangement is adopted to save marriage expenses, and gain brides for men of low family, and is common among Bráhmans, Wániás, Kunbis, and other high caste Hindus. The simple case of a return marriage is when A gives his daughter to B, and B in return gives a daughter to A. If B has no daughter, a daughter of B's brother, sister or other relation is given. In other cases three families may join together to arrange a marriage. Thus A gives his daughter to a son of C ; C gives a daughter to a son of A. This form of bargain is known as *tarakhlu* or *chokhru* if four families join."

In regard to second marriages the following information gives some of the current views :—

"To the men of almost all classes of Hindus a second marriage is allowed. But except in some families among the higher castes of specially good position, and in cases where the first wife dies or proves to be barren, a second marriage is unusual. On the question whether women may marry a second time, Hindus are divided. All except the higher castes allow and practise it. But the Bráhmans, Wániás, Sonis, and some subdivisions of Suthár, in fact all who wear the sacred thread, are strongly opposed to it, and visit with excommunication from their caste any one bold enough to break through the rule.

"Among lower classes the practice of giving divorce is in existence."

Bhil marriages in Panch Mahals [Gujarát]. After the bridegroom's reaching the bride's house the following ceremony takes place :—

"The bride is then led in by her mother, and seated opposite to the bridegroom. Their hands are joined, and the hems of their garments tied. Then while three women sing songs, the bride and bridegroom walk together twelve times round a branch of the *salyara* tree placed in the middle of the booth. When this is over, the bride and bridegroom feed each other with wheaten bread and molasses."

Again :—

"A man may marry a second or a third wife in the lifetime of the first. A woman marries again, not only if her husband dies, but if she gets tired of him, and can bring another man to take her and pay her husband his marriage expenses. The children, if there are any, stay with their father.

"A Bhil youth and girl anxious to marry, but unable to find the necessary £7 (Rs. 70) or so, not uncommonly arrange that he should carry her off on her way to or from some fair or wedding feast. She then lives with him as his wife, and when her parents come in pursuit, an agreement is made for paying the dowry by instalments, or in some other way suited to the bridegroom's means." [Campbell's Bombay Gazetteer, vol. III. pp. 220, 221.]

Náikdá marriages [Panch Mahals]—

"After dinner the bride and bridegroom are seated face to face in the square, or *chori*, in the centre of the booth, and by two old men, one from each family, called for the occasion priests or *pujaris*, have their hands joined and their skirts tied. Then a sheet is thrown over their heads, and the old men give them some balls of flour and molasses. When each has twice fed the other, the cloth is drawn away, and the marriage is over. In many cases there is no ceremony of this kind.

"If a girl reaches the age of sixteen, and her parents have not betrothed her, she may go and live with any man she chooses, and if he agrees to pay her parents from £1 12*s*. to £5 (Rs. 16 to Rs. 50), no objection is raised. Again, if a woman deserts her husband, and goes to live with another man, he pays the husband from £1 12*s*. to £6 (Rs. 16 to Rs. 60). If the husband agrees to give up his wife, he is paid nothing. A widow may marry again. On such occasions there is no ceremony. The husband presents her with a new petticoat, bodice, and robe. He comes to her house, and takes her away with him. But this must be done at night, for it is a common belief that if a widow is married in the daytime, the village will be burnt down. A man may have at the same time more than one wife. The Náikdás do not intermarry with any other caste. But if a Koli woman lives with a Náikdá or a Koli with a Náikdá woman, they are admitted into the Náikdá caste."—Id. Vol. III., pp. 224, 225.

MADRAS PRESIDENCY.

Malabar, Nair marriages :—

"The Nairs marry before they are ten years of age, but the husband never cohabits with his wife. He allows her oil, clothing, ornaments and food, but she remains in her mother's house, or after her parent's death with her brothers, and cohabits with any person she chooses of an equal or higher rank than her own. In consequence of this strange arrangement, no Nair knows his own father, and every man considers his sister's children as his heirs." [Hamilton's History of Hindustan, vol. II. p. 280; see also page 293 of the same volume : also a more detailed account of the customs in Buchanan's "Journey from Madras through Mysore, Canara and Malabar," vol. II. pp. 410—412. The consequences of these extend to other castes, see pp. 423—427 of the same volume of Buchanan.]

In connection with these marriages a good deal of light will be thrown

by the following Sixteen Rules, extracted from a translation of Bhûtâlapândya's Law of Alyasantâna by B. Ramaswammy Naidu, B.A., Canarese and Telugu Translator on the Appellate Side of the High Court, pp. 20, 23, [Madras, 1872]:—

*Sixteen Kuttales or Rules.*

1. If a question should arise as to how the line of a family governed by the Alyasantâna law may be continued in case the only girl of that family goes to see her husband, the answer is, the father and mother are not competent to give the girl (in marriage) to another; but the maternal uncle and others of that family may do so. The father and mother have no power to make a gift of their girl by the ceremonial of pouring water, but they can touch the vessel with the water to be so poured.

2. If in that (Alyasantâna family) a girl loses her husband, such girl is called Buḍavaḷati; if she happens, before she receives the Uḍigé (wedding cloth) to become pregnant by intercourse with a person of her own caste, Bhûtâlapândya declares that she may be given to such person in Bodadhâre marriage on levying a fine from him. Bhûtâlapândya adds that if the man be of a higher caste than the girl, she may be allowed to be kept by him; but if he be of an inferior caste, the Ballâlas may sell such girl after exacting a fine from him.

3. If a husband leaves his wife and goes to a foreign country, Bhûtâlapândya declares that she may, after the expiration of 5 years, be joined to another person with a gift of Uḍigé (cloth). He further says that if she become pregnant in the absence of her husband, she may be placed in the keeping of her paramour, with a gift of ornaments, provided he be of superior caste; if of the same caste, with a gift of clothes; and if of an inferior caste, she may be abandoned, fined, and joined to such caste.

4. If after such a woman has brought forth three or four children subsequent to her marriage, the husband goes to another country, she cannot be wedded to another person. If she should have connection with a person of equal caste, and becoming big with child before the return of her husband, she cannot be remarried. If in such case the person be of an inferior caste, she should be abandoned (excommunicated).

5. Bhûtâlapândya records a rule to the following effect: If a married woman find her husband to be an adulterer, and the husband find her to be adultress, and he take her and deliver her over to her parents, she may be wedded to another person. If the husband forsaking his wife takes another woman [into his keeping, and fails to treat his wife properly] the members of her family may recall her from her husband, and get her wedded to another person. Moreover, if the husband illtreats [the wife by striking and abusing her as he likes], a reconciliation may be effected between them three or four times; but should there be a recurrence of disagreement even afterwards, the members of her family may recall her from her husband, and get her married to another person.

6. If a girl shall arrive at puberty, and become pregnant before marriage, such girl as well as the person that caused such pregnancy should be fined, and the girl may be placed in his keeping if he be of a superior caste, or abandoned if he be of an inferior caste.

7. If a girl who has arrived at puberty as aforesaid elopes with anybody before her marriage, she may be married to him if he be of the same caste, or abandoned if he be of an inferior caste, or placed in his keeping if he be of a superior caste.

8. If a married woman leaves her husband, and elopes with a man of the same caste, she may be wedded to the latter. If he be of a superior caste she may be placed in his keeping; if he be of an inferior caste she may be abandoned.

9. In respect of Kshatria girls the custom of Kshatrias should be observed. Among Kshatrias and Brahmins marriages may be performed by the process of Kaidhâre (giving the girl in marriage, attended with the pouring of water by the hand). If the male be of the same or of an inferior caste, she shall be abandoned.

10. As regards the Jaina sect, if the male be of the same caste she may be placed in his keeping, but if she had connection with one of a superior or inferior caste, she becomes abandoned.

11. With reference to the women of Malavara class, if the male be of the same or superior caste, she may be placed in his keeping; if he be of an inferior caste, she should be abandoned and cannot be recalled.

12. Bhûtâlapândya declares that among the two castes Nâyaminar and Nâyar, there is only Kanyakalyan, or marriage of virgins, and not Svayanvaram, or marriage by the girl selecting her husband; but afterwards (the girl) may be allowed to be kept by persons of the same caste, or of a superior one, such as Brahmins.

13. As regards the Kadamba class and Kumâra Ballala, such girl may be placed in the keeping of a male of the same caste or of a Kshatrya, Brahmin, &c., but if of an inferior caste, she should be abandoned.

14. As regards Sthânikas and Ambalavásis, if the male be not of the same or be of any inferior caste other than that of a Brahmin, she shall be abandoned.

15. Bhûtâlapândya says that a girl of Padârthi or Horapoduvâlu class may be taken into the keeping of a person of the same caste or of a superior one after Udigé cloth shall have been given to her.

16. In the case of Arasus (kings) the Brahminical marriage may be performed. As a (Anyata) gift is generally made to the children born of him (Arasa), Bhûtâlapândya has declared that the marriage ceremony may be performed by (fixing) pillars and (placing) pots, &c.

If those Arasus are such as cannot afford to make gifts, it would not then be possible to celebrate the marriage according to the Brahmanical customs. Bhûtâlapândya also declared that Chowtas and Baugeras have the same rules and the same auspicious and inauspicious ceremonies as Brahmans.

The following information is to be gathered from the Kalyâṇa Shaṭanku, or the marriage ceremonies of the South of India, by the Revd. J. F. Kearns [Madras, 1875] :—

About the Maravers (p. 33) :—

"Among very poor Maravers, few ceremonies only are performed. They simply have a feast for their relations, place the bridegroom and the bride on the Manavarei, and cause the bridegroom's sister to tie the Thâli; and thus ends the business. Wives can be taken only from the relations of the *bridegroom's mother*; and never from the father's relations. Strangers are preferable to the father's relations."

About the Kuravers (pp. 34 and 35) :—

"In cases where separation occurs, the sum given as the nuptial present should be returned, and any one willing to pay the same amount may take her again in marriage.

"In this caste, children are espoused, even before their birth. Two men who wish to have marriages between their children say one to the other, 'If your wife should have a

girl and mine a boy, or *vice versâ*, they must marry.' And to bind themselves to this, they exchange tobacco, and the bridegroom's father makes a feast of arrack or toddy to the coming bride's relations. But if after the children are grown up, the Brahmin should pronounce the omens unpropitious, the marriage is not consummated, and the bride's father pays back the cost of arrack and other spirits used at the betrothal."

About the Kuluvars (p. 50) :—

"A girl is espoused to a young man before she becomes marriageable. On the day of the espousal, a person is sent to fetch all the other Kuluvars, wherever their huts may be; and in their presence the espousal is settled, and the bridegroom gives them a feast of a fat pig and several bottles of arrack."

About the Naickers (p. 54) :—

"The rule with this caste is that the men shall marry the daughters of their sisters, *i. e.* their nieces. Marriages are consequently made by persons between whom there exists a strange disparity of age. Oftentimes the bride is a mere infant, while the bridegroom is a fullgrown man, and *vice versâ*."

About the Reddies (p. 59) :—

"The Reddies, like the Naickers, are obliged to marry their sisters' daughters, *i.e.* their nieces. They have no fixed time for celebrating their marriages, but, generally speaking, their marriages take place before the bride has attained the age of puberty, but having determined upon celebrating a marriage, an astrologer is consulted, in order to ascertain a lucky day for the event; and having ascertained it, a message is sent to the bride's friends desiring them to get all things ready."

(P. 62.) "N. B.—In this caste and also in the Naicker caste, polygamy of the worst description is legally practised. It is no uncommon thing to meet a man married to two sisters, and having a family by each. I know an instance of a man having three sisters to wife at the same time."

About the Koliar Pullars (p. 68) :—

"There are seven tribes or classes in this caste, and no man of the caste is allowed to take him a wife from his own tribe or class, because the women of his class are considered his sisters."

## India north of the Narmadá.

Bengal.—[The references in the portion relating to the different provinces of Bengal are to the Statistical Account of Bengal by Dr. W. W. Hunter in 20 volumes.]

Dr. Hunter, after describing Kulinism in Dacca, and the results of the enquiry instituted by the last Hindu independent King Laxman Sen, speaks of the division of the Kulin Ráhrí Bráhmaṇa families into two groups—*mukhya* (chief) and *gauna* (secondary). He then enumerates the *mukhya* Kulin families, and goes on :—

"Difficulties regarding marriages soon sprung up, and the status of the Kulins was again remodelled by Debí Sinh, a distinguished ghatak (marriage registrar), and he further classified the Rárhí Kulins into thirty-two mels or families. Those Kulins who had married their daughters to Srotriyas or non-Kúlins, were degraded and called Bansaj; while those who married the daughters of these lapsed Bansaj Bráhmans were ranked a step higher, and called Bhanga (literally broken). A Kulin, however, may marry a girl belonging to the upper class of Srotriyas without incurring any loss of caste. By marrying into a family of lower class Srotriyas or a Bansaj family, he loses a certain amount of respect, but still retains his Kulinism. . . . . .

There is no limit to the number of wives a Kulin may have. The Deputy Collector reported to me in 1871 that there was then in Bikrampur a man of this class with upwards of a hundred wives, while his three sons had fifty, thirty-five, and thirty respectively. Those Kulins who make marriage a profession do not maintain their wives, but leave them and their children to be provided for by the respective fathers-in-law. They are, however, bound to provide dowers for their female children. The sons are raised to the father's rank, the daughters take that of the mother, and a portion is required to get them eligibly married. Few Kulins, however, have the means of endowing their daughters, and the consequence is that a large proportion of the female children of Kulins by Bansaj wives remain unmarried." [Vol. V. p. 55.]

Further on the following remarks occur in regard to marriages among certain Vaishnavas in this part of Bengal:—

"Owing to this disparity in the number of the sexes, a large proportion of the women have to remain single. The men often join the fraternity for the sake of concubinage. A man happens to fall in love with a widow or with a woman of a different caste. As a consequence they are both persecuted by society, and become Vaishnavas, when they can marry without molestation. The marriage ceremony is very simple; the man and woman exchange garlands, make a small present in money to the goswámí, or spiritual guide, and a feast to the neighbouring Vaishnavas according to their means." [Vol. V. p. 57.]

Marriages amongst the Chakmás of the Chittagong Hills. The procession with the bridegroom comes to the house of the bride's father:—

"On arriving, all enter the house, and the bride and bridegroom sit down together at a small table. On the table are eggs, sweetmeats, rice and plantains, all laid out on leaf platters. The best man (Sowala) sits behind the bridegroom, and the bride has a representative bridesmaid (Sowali) behind her. These two then bind around the couple a muslin scarf, asking, 'Are all willing, and shall this thing be accomplished?' Then all cry out, 'Bind them, bind them;' so they are bound. The married pair have now to eat together, the wife feeding the husband, and the husband the wife. . . . After they have thus eaten and drunken, an elder of the village sprinkles them with river-water, pronounces them man and wife, and says a charm used for fruitfulness." [Vol. VI. p. 47.]

And again:—

"It sometimes happens that a lad and lass fall in love with each other, but that the parents will not hear of the match. In such a case, should the lovers elope together the girls' parents have the right to demand their daughter back, and take her home. If, notwithstanding this opposition, the lovers' intentions remain unaltered, and they elope a second time, no one has a right to interfere with them." [Id., vol. VI. p. 47.]

"If a man runs away with another man's wife, he has to repay to the injured husband all the former expenses of marriage, and is in addition fined from £4 to £6. Divorce is not difficult of attainment, and is awarded by a jury of village elders, the party adjudged to be in fault being fined heavily." [Id., vol. VI. p. 47.]

Among the Tepperahs of Chittagong:—

"At a marriage, a pig is killed as a sacrifice to the deities of the woods and streams; the girl's mother pours out a glass of liquor, and gives it to her daughter, who sits on her lover's knee, drinks half, and gives him the other half; they then crook together their little fingers. This concludes the ceremony.

"Divorces are obtained only on an adjudication of the village elders. Captain

Lewin instances one case which he witnessed himself, in which a divorce was sued for by the wife on the ground of habitual cruelty. The jury deliberated, and found that the cruelty was proved, and that the divorce should be granted." [Vol. VI. p. 52.]

Among the Kumis of Chittagong :—

"A marriage among the Kumis is simply a festive occasion, and does not appear to entail any particular ceremonies." [Id., vol. VI. p. 55.]

Similarly among the Lushais or Kúkis :—

"Marriage is a civil contract, that may be dissolved at the will of both parties, and is celebrated only by feasting and dancing." [Id., vol. VI. p. 61.]

In regard to the Noákali district it is said :—

"Widow marriages take place among the Chandáls, barbers, washermen, fishermen, and shoemakers of the district. They are marriages of mutual inclination, and require no ceremony; but though excommunication is not incurred thereby, and the children are considered legitimate, such marriages are exceedingly rare." [Id., vol. VI. p. 282.]

In vol. X. Dr. Hunter describes the marriage ceremonies among the Koch or Rájbansi tribe in Kuch Behar :—

(1) Gandharba Bibába :—

"The only ceremony performed on such occasions is the placing before the girl of the *chalan báti*, before described, and the presenting her with a new cloth and shell bracelets (Sankh) to be worn on the wrist. The lower garlands are also exchanged between the bride and the bridegroom. The services of the Brahmans are not brought into requisition, as no religious ceremony is performed. The *chalan báti*, which seems the main part of the ceremony, is placed before the girl by young married women whose husbands are living. This kind of marriage is seldom resorted to by the lower orders of the people, but it prevails extensively amongst the higher classes. It is not held in very high consideration, although it is binding on both parties" [pp. 374, 375].

The next form is called Bráhma. It resembles the same form in other parts of India; but many ceremonies are omitted. Even the *saptapadi* and the *vivahahomam* are omitted, and probably instead of the first the bride is seated on a board, and carried round her husband seven times, a barber holding an umbrella on her head. The third form is the widow marriage, which is thus described :—

"*Widow marriage.*—This marriage, if it deserves to be called by that name, takes place without any ceremonies whatever; but the children of the union are acknowledged as heirs and successors to the property of their father. Such children, however, are not recognised as legitimate children in Hindú society, and the women are always looked down upon even by the Rájbansi. The peculiar circumstances under which widows are received by men as wives have given rise to different names by which such women are known, such as *danguá* wife, *dhoká* wife, *páshuá* wife. *Dang* means a stick or a blow dealt with a stick; when a widow lives by herself and a man goes to the house with a *Dang* or stick in his hand, and strikes a blow with it on the roof of the house, and so enters in, and takes possession of the woman, such woman is called a *danguá* wife. This mode of union is naturally only resorted to under previous arrangement between the parties. Dhoká means 'to enter into'; when a widow of her own accord enters into the house of a man, she is denominated a dhoká wife. *Pashua* or *pash* means 'afterwards;' a woman that is taken afterwards, that is, after she has been once before married, is called a *pashua* wife. *Pashua*, in fact, is the general name for widow marriage." [Id., vol. X. page 377.]

Among the Santals:—

"On the day fixed for a marriage, the bridegroom with his relations proceeds to the bride's father's house, where they are seated on cots and mats; after a repast the bride's father takes his daughter's hand, and places it in that of the bridegroom, and exhorts him to be loving and kind to the girl that he thus makes over to him. The groom with the little finger of his right hand marks the girl on the forehead with *Sindúr* or vermilion, and linking the same finger with the little finger of her right hand, he leads her away to his own house. Polygamy is allowed and practised, and if a man dies leaving several widows, they can become the wives of his brothers or cousins, but only one to each. In regard to tribal or other restrictions on marriage, I find no information, except that a man may not marry a near relation." [Id., vol. XIV. p. 298.]

And again:—

"No priest officiates at a Santal marriage. The social meal that the boy and girl eat together is the most important part of the ceremony. By this act the girl ceases to belong to her father's tribe, and becomes a member of her husband's family." [Id., vol. XIV. p. 316.]

Marriages among the Birhors of the Lohárdagá district:—

"Their marriage is of the most primitive form, stimulating the chase and forcible abduction of the bride by the bridegroom. As soon as a young couple have agreed to marry, the elders of both families collect all available resources for a feast. Roasted pig, stewed monkey, herbs cooked in fat, and all sorts of roots, make up the bill of fare, with plenty of rice-beer, or, if that cannot be obtained, the intoxicating liquors made up from the plants *Khulu* and *Khasuná*. When the feast is ready, the members of the two families sit down in a line opposite one another, and the father of the bridegroom addresses the bride's father, to the effect that his son is swift of foot, and is calling on the bride. The girl's father then turns to her, and tells her to run and show her lover how fleet she is. On this, she gets up, and runs into the jungle, and after a minute's interval her lover follows to catch the bride. During the chase the assembled company chant a kind of song, in which one side praises the speed of the bridegroom, and the other that of the bride. The song goes on till the shout of the boy, as he succeeds in catching the girl, is heard, when silence follows. The marriage is consummated at once in the jungle, and the girl on returning to the company is dressed by the women in a new *sári*, of coarse country cloth, the bridegroom's present." [Id., vol. XVI. p. 258.]

Among the Uráons of Lohárdagá:—

"A bower is constructed in front of the residence of the bride's father into which the bride and bridegroom are carried by women, and made to stand on a currystone, under which is placed a sheaf of corn, resting on a plough-yoke. .....

"In Uráon marriages the bridegroom stands on the currystone behind the bride, but, in order that this may not be deemed a concession to the female, his toes are so placed as to tread on her heels. The old women under the cloth are very particular about this, as if they were specially interested in providing that the heel of the woman should be properly bruised. Thus poised, the man stretches over the girl's head, and daubs her forehead and crown with the red powder, *sindúr*; and if the girl is allowed to return the compliment (it is a controverted point whether she should do so or not), she performs the ceremony without turning her head, reaching back over her own shoulder, and just touching his brow. When this is accomplished, a gun is fired; and

then, by some arrangement, vessels full of water, placed over the bower, are capsized, and the young couple and those who stand near them receive a drenching shower bath. They now retire into an apartment prepared for them, ostensibly to change their clothes, but they do not emerge for some time, and when they appear they are saluted as man and wife." [Id., vol. XVI. p. 286.]

Among the Bhuiyas in the tributary state of Bonai, a child is named generally after the grandfather, and—

"There are no religious ceremonies after this till marriage, which cannot take place till the parties are adult, and the parents have very little to do with the selection of partners." [Id., vol. XVII. p. 171.]

There appear to be no ceremonies.

Among the Muasis or Kurus the following appears to be the chief ceremony:—

"A vessel full of water and a lighted lamp are placed near the pole, and also a currystone, on which is arranged seven little heaps of rice and turmeric. When all is ready, the chief bridesmaid and best man lead the young couple once round the post, then leave them to perform the remainder of the revolutions themselves; and each time as they approach the currystone, the bridegroom causes his bride to kick away one of the heaps of rice and turmeric. When the seventh is knocked off, the best man seizes the pole, and violently shakes it, and on this the people all exclaim, 'it is done.' The wedded pair are then taken inside, and after spending some time together, come out to receive the congratulations of their friends and retire again to the chamber prepared for them." [Id., vol XVII. p. 186.]

And among the Kúrnis of Mánbhum,—

"The bride is now introduced into the assembly, with the gifts prepared for her by her father-in-law, and the *var* presented. She is then taken by her friends to a *Mahuá* ree, which she must wed, as the *var* wedded the mango, and she is brought back to the bower of Hymen in a basket. The *var* then applies the *sindur* to her forehead, making a red mark between the eyes, and the guests all shout '*Haribol Sindradán.*' In some places, as in Singbhum, they touch and mark each other with blood as a sign that they have become one flesh, and this is probably the true origin of the singular but very universal custom of *Sindradán*. They are now man and wife, and receive the congratulations of their friends, and next morning go home together on the *Jaház*, the bride sitting submissively at her husband's feet. The presence of a Brahma is not necessary to give validity to a Kúrmí marriage. They consult a Brahma astrologer as to whether the marriage is likely to prove happy and fruitful or otherwise, and he is sometimes asked to name a fortunate day, but his aid is not otherwise sought." [Id., vol. XVII. p. 294.]

Among the Juangs of Orissa:—

"The marriage ceremonies are very simple. The formal preliminaries are arranged by mutual friends; but this generally follows a private understanding, which the parties most interested have come to without intervention. After the bridegroom has made his election, the following gifts are bestowed in his behalf: To the girl's father, a bullock; to the maternal uncle, a bullock; to the mother, a rupee in money and a cloth." [Id., Vol. XIX. p. 240.]

And among the Bhuiyas of the same district:—

"*Marriages.*—Marriage is recognised, but is brought about in the simplest manner. If a young man fancies a girl, he sends a party of his friends to propose for her; and

if the offer is accepted, a day is fixed, and a load of rice in husk is presented on his behalf. The bridegroom does not go himself to the bride's house; his friends go, and return with her and her friends. Then they make merry, eating and dancing, and all stay and make a night of it. In the morning, the bridegroom dismisses the bride's friends with a present of three measures of husked and three of unhusked rice; and this is a full and sufficient solemnization. A man may have more wives than one if he can afford it, but no Juang has ever ventured on more than two at a time. They are divided into tribes, and are exogamous." [Id., vol. XIX. p. 247.]

### HINDUSTHAN PROPER: RÁJPUTANA.

The following portions of the Rájputana Gazetteer, vol. I. (*Calcutta*, 1879) may be referred to, pp. 68—70. The existence of exogamy, as Mr. J. F. McLennan calls it, is here best illustrated. Examples of abduction; of marriages with maternal cousins; of the disruption of tribes into castes or sects.

*Náthá* marriages:—Brothers marry the widow of the elder brother in Ajmere (p. 80). So also in Banswara (pp. 120, 121); again the widow goes to any man *she* pleases, but he must be "of a different caste to her father" (p. 121); Rákshasa marriages (pp. 121, 122); sale of widows in marriage (p. 161); poligamy and left-handed marriage between different castes held binding (p. 161).

Marriages in the Ulwar State:—

"A good deal, however, is spent by the poorer classes on marriages; and though boys often remain long unmarried owing to poverty, few grow old single, for Meos allow concubinage without bastardising the issue of it, and the lower castes of Hindus can make *daricha* marriages, that is, marry the widows of their brethren by the marriage of their daughters. Even Baniyas now often do this."[1]

*Mairwara*:—From Dixon's Sketch of Mairwara, the following may be gleaned. The Mairs consider themselves Hindus; but are regardless about forms and ceremonies. They worship some of the national deities. "Their marriages are conducted after the customs of the Hindus" Their widows can marry a younger brother of the deceased, but not an elder. There is no form. The widow can select any one she likes[2] with the above single reservation.

### N. W. PROVINCES.

The Gazetteer of the North-Western Provinces of India by Edwin T. Atkinson, B.A., may also be usefully drawn upon:—

Thus in regard to polyandry and its remains (Meerut Division) see vol. II. p. 70; Intermarriages between different *gots* (Saharanpur district), Id., p. 184; Remarriages with the deceased husband's

[1] Gazetteer of Ulwur by Major P. W. Powlett, late Settlement Officer of Ulwar. London, 1878: p. 44.

[2] Sketch of Mairwara, by Lieut. Colonel C. J. Dixon, London, 1850; see pp. 28, 29, 31, 32.

brother; Caste Panchayats arrange divorces and remarriages of divorced women (Aligarh district). [Id., p. 401.]

Caste-Panchayats acting in marriage and divorce questions (Bulandshahar district) see Atkinson's N. W. Gazetteer, vol. III., Part II. p. 51; Intermarriages between different Bráhmaṇa tribes, (Meerut district) Id., p. 256; Confusion of *gotras*, Id., p. 257; Caste-Panchayats, Id., p. 270; *Karáo* (concubinage or marriage with the widow of a deceased brother), (Muzafarnagar district) pp. 505, 511; Mixed marriages, (Eta district), Atkinson's N. W. Provinces Gazetteer, vol. IV. pp. 38, 39; Intermarriages between branches of the same family of Bráhmaṇas (Etawa district) Id., pp. 274—276.

The Oudh Gazetteer in 3 volumes, published in 1877, may also be consulted.

Intermarriages between the different *gotes* (in Amethi Parganah) vol. I., pp. 57, 58; The Castes of Kheri and their Customs, vol. II., pp. 204—215.

## SECTION II.

### *Adoption.*

The first mention of adoption in the Ṛig-Veda is that of Śunahśepa,[1] the son of Ajígarta, by Viśvámitra, who had a hundred sons living at the time when he made the adoption. Śunahśepa gave himself, and was therefore *Svayandatta* (self-given). Such instances still occur, and are sanctioned by custom. He is called Ájígarti, as having been the son of Ajígarta. In the Ṛig-Veda-Sarvánukrama he is styled "कृत्रिमो वैश्वामित्रो देवरात:"—Kṛitrima-Vaiśvámitra-Devarátah. As I said before, he became the adopted son of Viśvámitra, and he is now one of the *Pravara* Ṛishis of the Viśvámitra *gotra* under the name of Devaráta.[2] When Viśvámitra adopted him, he had a hundred sons living; of these, fifty disapproved of the adoption, and were cursed in consequence; while those fifty who approved of it, and accepted Śunahśepa or Ajígarta as their elder brother, were blessed by that sage.[3]

[1] Ṛig-Veda Saṁhitá, I., 6, 24; Aitareya Bráhmaṇa, 7th *Pañchiká*, 17th and 18th *Khaṇḍas*, vol. I., pp. 182—184; Dr. Haug's Translation, vol. II. pp. 467—471; Bhágavata Puráṇa, *Skandha* ix., *Adhyáya* 16, vv. 28-37, leaf 29, pp. 1 and 2; Mahábhárata, *Ánuśásanika Parva*, *Adhyáya* 3, vv. 6—8, l. 6, p. 1.

[2] Áśvaláyana Śrauta Sútra latter half, 6, 14, 2—4, Cal. ed. p. 883.

[3] Aitareya Bráhmaṇa, VII. 18; Haug, vol. I. p. 183, and vol. II., pp. 469, 470; Bhágavata Puráṇa, *Sk.* ix., *Adhy.* 16, vv. 28—36, leaf 29. The account given in note 10 by Mr. Sutherland (see Stokes' H. L. B. p. 533) is not correct, and is opposed to that in the Aitareya Bráhmaṇa, which latter agrees with other Puránic accounts.

The next example I shall give is from the Yajur-Veda.[1] The Ṛishi Atri gave away all his children to the son of Úrvá, who longed for a son. This is an example of the adoption of more than one son; and of giving away all sons.

The next example is from the Rámáyana, and it is that of the adoption of a daughter of king Daśaratha by Lomapáda, who gave her in marriage to sage Ṛishyaśṛinga.[2] In like manner Vasudeva gave his daughter Pṛithá to Kunti-Bhoja, who adopted her and bestowed her in marriage upon Paṇḍu, King of Hastinápur.[3] These instances appear

[1] *Taittiriya Kṛishṇa Yajush Samhitá, 7th Kánḍa, 1st Prapáthaka, 8th Anuváka* :— अत्रिरददौर्वाय प्रजां पुत्रकामाय सरिरिचानोऽमन्यत निर्वीर्यः शिथिलो वातयामास एतं चतूरात्रमपश्यत्तमाहरत्तेनायजत। ततो वै तस्य चत्वारो वीरा अजायन्त सुहोता सूद्गाता स्वध्वर्युः सुसभेयो य एव विद्वाँश्चतूरात्रेण यजत अस्य चत्वारो वीरा जायन्ते सुहोता सुद्गाता स्वध्वर्युः सुसभेयः।

Translation :—Atri gave his children to the son of Urvá, who was desirous of a son. He (then) being alone felt himself to be powerless, loose and advanced in age. He found this *Chatúrátra* [a *Satra* ceremony described in the Veda]. He adopted it, and sacrificed according to it. Therefrom, four sons were born to him—Suhotṛi, Súdgátṛi, Svadhvaryu and Susabheya, [the four sacrificing priests at a *Śrauta* sacrifice].

[2] According to another version of the text, she appears to be the daughter of Lomapáda. See however Válmiki Rámáyana, *Bálakánda, Sarga* 11, Comments, l. 31 p. 2. The verses quoted by Nandapaṇḍita run as follows :—इक्ष्वाकूणां कुले जातो भविष्यति सुधार्मिकः। नाम्ना दशरथो वीरः श्रीमान्सत्यपराक्रमः॥ २ ॥ सख्यं तस्याङ्गराजेन भविष्यति महात्मना। कन्या चास्य महाभागा शान्ता नाम भविष्यति ॥ ३ ॥ अपुत्रस्त्वङ्गराजो वै लोमपाद इति श्रुतः। स राजानं दशरथं प्रार्थयिष्यति भूमिपः॥ ४ ॥ अनपत्योऽस्मि धर्मज्ञ कन्येयं मम दीयतां। शान्ता शान्तेन मनसा पुत्रार्थे वरवर्णिनी ॥ ५ ॥ ततो राजा दशरथो मनसाभिविचिन्त्य च। दास्यते तां तदा कन्यां शान्तामङ्गाधिपाय सः॥ ६ ॥ प्रतिगृह्य तु तां कन्यां स राजा विगतज्वरः। नगरं यास्यति क्षिप्रं प्रहृष्टेनान्तरात्मना ॥७॥ कन्यां तामृष्यशृङ्गाय प्रदास्यति स वीर्यवानित्यादि ॥ तत्रैव लोमपादं प्रति दशरथवाक्यम् । शान्ता तव सुता वीर सह भर्त्रा विशाम्पते ॥ मदीयं नगरं यातु कार्यं हि महदुद्यतमिति। तत्रैवऋष्यशृङ्गंप्रति लोमपादवाक्यम् । अयं राजा दशरथः सखा मे दयितः सुहृत्। अपत्यार्थं ममानेन दत्तेयं वरवर्णिनी। याचमानस्य मे ब्रह्मन् शान्ता प्रियतरा मम ॥ सोयं ते श्वशुरो धीर यथैवाहं तथा तव इत्यादि।

Translation :—There will be born in the family of the Ikshvákus a warrior by name Daśaratha, who will be rich and attentive to his duties. There will be friendship between him, and the noble minded king of the Angas. He will also have a fortunate daughter by name Śántá. The king of the Angas known by the name "Lomapáda" being childless will request Daśaratha as follows :—"Oh righteous, I am childless; let this handsome daughter Śántá be given to me by you with heart calm, in the place of a son." Then king Daśaratha, after considering in his mind, will give that daughter Śántá to the Lord of the Angas. Then that king with his anxiety removed and his heart delighted, taking her with him, will go with speed to his city. Then that mighty king will give her to Ṛishyaśṛinga." In the same work Daśaratha is said to have spoken to Lomapáda as follows :—"Oh warrior and lord of the Vaiśyas, let that daughter of yours Śántá go with her husband to my city; for a great work is to be done." Again, in that very book these are the words spoken by Lomapáda to Ṛishyaśṛinga :—"This king Daśaratha is my companion and beloved friend, this handsome girl is given by him to me as my child; oh Bráhmaṇa, this Śántá is very dear to me, for having got her in gift. Oh wise man, he also is thy father-in-law, as I am (thy father-in-law)." See Dattaka Mímámsá by Nanda Paṇḍita, Cal. ed. p. 41.

[3] Harivaṁśa, *Adhyáya* 34, v. 27, leaf 41, p. 1, Dattaka Mímámsá of Nanda Paṇḍita, Cal. ed. p. 42; see other instances in Hemádri Dána Khanda, Cal. ed. p. 678.

to have occurred before the time of Bhṛigu's Manu, whose text in regard to adoption is very general.[1] The adoption of a daughter simply as a daughter, or as a *Putrikâ*, appears to have been general. There is no prohibition in the *Kali Varjya Prakaraṇa* (section describing things prohibited in the *Kali* age) as given by modern writers against the former of these adoptions. They are as frequently made at present, as they used to be in the times of old. The *Saṅkalpa* (determination) made before taking a daughter is different from that of taking a son, and is settled by the *Prayoga* (ceremonial) writers. In the case of a son the *Saṅkalpa* current in these parts assumes that the receiver has no *aurasa* son,[2] which according to the current view of the word *son*, includes the *auraṣa* son's son and the son's grandson.

Looking at the Vedas and the *Itihâsas* (histories), and the Puráṇas, it appears to me that the system of adoption was older than Manu. The present text in that Smṛiti simply declares the practice as it was then found in that part of the country where the work was compiled. No restriction as to age or number is there given. The only limitation is that the person adopted should be *Sadṛiśah* (similar). The rest of the distinctions and provisions as they now appear in some writings are comparatively *modern*, and they are not observed by the people; except that a sonless man alone at present adopts a son.

The object of having an adopted son is double, spiritual as well as worldly.

Manu[3] :—॥ अपुत्रेण सुतः कार्यो यादृक्तादृक्प्रयत्नतः । पिण्डोदकक्रियाहेतोर्नामसंकीर्तनाय चेति ॥

Translation—A *sonless* man should adopt, with efforts, a son of any description whatsoever, so that he may offer him the *Piṇḍa*, perform his obsequies, and perpetuate his name.[4]

It will be thus seen that adoption is advocated for two objects:—1, the performance of ceremonies consisting of giving *piṇḍa* and water, and 2, the perpetuation of the name. The first secures salvation or heavenly bliss; the second perpetuates the family. The merely spiritual or religious consideration of obtaining *Moksha* (salvation) can however be attained according to the Śástras by various other means, some of which are held to be even more efficacious than the begetting or adopting of a son. These are:—(1) *Svádhyáya*[5] (or the study of the Vedas); (2) appropriate gifts;[6] (3) resort to *tirthas* (holy places;

[1] Chapter ix., verse 168.

[2] Some limit this to an *aurasa* son.

[3] This text is not found in the present printed edition of Bhṛigu's Manu; but is quoted by Nanda Paṇḍita from Manu. (See page 2.)

[4] Taittiríya Áranyaka, *2nd prapáthaka*, 2nd *Anuváka*, and Śankara's Comments, Cal. ed. p. 199; see also Anuvákas 9 to 14, pp. 235 to 255 *id.* and the comments thereon.

[5] See authorities collected by Hemádri in his Dána-khaṇḍa, pp. 5-12; Cal. ed.

[6] Matsya Puráṇa, vol. II., p. 672, vol. I., 660—700; Agni Puráṇa, vol. I., 109—14, 376—386; and vol. II., pp. 1—21; Madana Párijáta, *Tirtha Prakaraṇa*; see also the Tirthendu Śekhara of Nágojibhaṭṭa.

(4) *puráṇa-Śravaṇa*[1] (hearing the Puráṇas recited); (5) the practice of Yoga[2] (meditation); (6) and accepting *sannyása*[3] (the order of an ascetic). If a man has no son, he can perform his own *Śráddha*, and be thus absolved from that obligation. The *Śráddha* so performed is called *Jívat-śráddha*[4] (*i. e. śráddha* performed while in life). Hemádri and other authorities think that this is to be performed by a man who has nobody else to perform it; but Baudháyana is of opinion that a man having such relatives, &c. may yet perform his own *śráddha*,[5] but that he cannot perform his own *Sapiṇḍana*. While the above is undoubtedly the Dharmaśástra as regards salvation, the popular tradition and belief joined to immemorial usage is strong that the begetting of a son is a moral obligation[6]; and failing that, adoption is desirable.

The above considerations in regard to the performance of *śráddha* and its substitutes will show whether adoption is or can, according to strict Dharmaśástra law, be a peremptory duty in the sense in which such a thing is now understood by our Civil Courts. So far as the performance of the *śráddha* is concerned, adoption cannot be said to be a peremptory duty; because there are so many other ways to attain the same object as that for which the performance of a *śráddha* is intended.[7] It is true that when a son is born or is adopted, he is enjoined to perform *śráddha* as one of his religious duties.[8] But if there be no son, the same object can be otherwise sufficiently attained. So that when a man gets a son either by marriage or by adoption, that son is by his religious law bound to perform his parent's *śráddhas*—both of his father and of his mother. But conversely a man

[1] Hemádri Vrata-khaṇḍa vol. I., p. 7; Cal. ed. Adhyátma Rámáyaṇa, leaf 5. The Mahábhárata, the Rámáyaṇa, the Bhágavata and other Puráṇas are read at people's houses every afternoon, and chiefly during the monsoon months; and in all Hindu temples throughout India.

[2] Yájñavalkya Smṛiti, chap. iii., vv. 202, 203, pages 261, 262, above part II., and Mitákshará chap. iii., leaf 41, p. 1; Agni-Puráṇa, vol. I. p. 1. See also Bṛihadaraṇyaka, vol. I., p. 450 Cal. ed.

[3] See Yájñavalkya Smṛiti, chap. iii., 57—205; Vijñáneśvara says that *Moksha* itself means *Sannyása*, Mit. (III.) l. 24, p. 2. The other Smṛitis speak to the same effect. All the above verses may be referred to in Part II.

[4] Nirṇayasindhu 3rd *Parichchheda*, *áśaucha Prakaraṇa*, l. 24, p. 1; Śráddha Mayúkha. (Benares edition) p. 114; see the authorities therein cited.

[5] Śráddha Mayúkha, pp. 114, 115.

[6] Aitareya Bráhmaṇa, VII. 13, vol. I. p. 178; vol. II., p. 462; Taittiríya Kṛishṇa Yajush Samhitá, 6th *Káṇḍa*, 3rd *Adhyáya*, 10th Anuváka; Samskárakaustubha, l. 42 p. 2.

[7] See above page 456; see also Yájñavalkya, chap. i. vv. 40—50, and chap. iii. vv. 190—205.

[8] Manu ch. ix. v. 180, states that sons are sought to avoid *kriyá-lopa* (the omission of ceremonies), and Kulúka (see leaf 167, p. 2) interprets *kriyá* by *Śráddha* and the rest.

or his wife is not religiously bound in the same manner to beget a son or to adopt one for the purposes of the performance of their or his *śráddhas* alone. Both marriage and adoption are ceremonies to be performed according to the usages of the people. The mode of performance of both depends on custom; and both are irrevocable when once duly performed.

It is sometimes loosely said that a childless Hindu is bound to adopt a son if at all anxious for his own salvation, and that what is required to be done for that end is not optional with him, but an imperative obligation.[1] But this is a very superficial view of the Hindu Law. Atri's text[2] and the other two passages (one from the Aitareya Bráhmaṇa, and the other from the Taittiríya Krishṇa Yajurveda) are merely *arthaváda* (phrases declaratory of the virtues, &c. arising from particular things); otherwise these texts being literally followed, we may have to go below the Nairs of Malabar!

Again, if it were an imperative obligation, adoption would, like the *upanayaṇa*, be one of the *nitya* (certain) ceremonies. But it cannot be so. For even marriage from which an *aurasa* (natural born, lit. fed from the breasts) son is expected is not a *nitya* ceremony. Náráyaṇa-bhatta in the Prayogaratna says :—

अत्र गर्भाधानाद्युपनयनान्ता एव सर्वेषां नियताः। न तु स्नानाद्याः। तेन ब्रह्मचर्यादेव प्रव्रजेदित्यादि न विरुध्यते॥

Translation :—From the *Garbhádhána* up to the *upanayana* [the ceremonies] are appointed for all; not so the (ceremonies) beginning with *Snána* or *samávartana*. Thereby the text "*brahmacharyádeva-pravrajet*," (from the *brahmachari's* state, one may become a *sannyási*) is not transgressed [1. 2 p. 1 l. 5].

---

[1] Sutherland's Weekly Reports, vol. XV. page 548. *Rágendro Naráyen Lákoree* v. *Saroda Soondaree Dabu and another*.

[2]. Atri: अपुत्रेणैव कर्तव्यः पुत्रप्रतिनिधिः सदा। पिण्डोदकक्रियाहेतोर्यस्मात्तस्मात् प्रयत्नतः॥

Translation :—At all times a sonless man only should secure a secondary son, by some means or other (*yasmát—tasmát* literally—from whomsoever or himsoever) with the object of the *Piṇḍá* (funeral cake) and water (Calcutta ed., vol. 1 p. 17).

Aitareya Bráhmaṇa; VII. 13, (Haug, vol. I., p 179) :—नापुत्रस्य लोकोऽस्तीति तत्सर्वे पशवो विदुः। तस्मात्तु पुत्रो मातरं स्वसारं चाधिरोहति एष पन्था उरुगायः सुशेवोऽयं पुत्रिण आक्रमन्ते विशोकाः तं पश्यन्ति पशवो वयांसिच तस्माच्चे मात्रापि मिथुनीभवन्तीति हस्मा आख्याय १३ Translation:—He who has no child has no place (no firm footing). This even the beasts know. Thence the son cohabits [among beasts] with his mother and sister.

This is the broad well-trodden path on which those who have sons walk free from sorrows. Beasts and birds know it, thence they cohabit (even) with their own mothers. Thus he told (Haug, vol. II. p. 462).

*Taittiríya* (or the Black) *Yajur Veda*, *Ashṭaka* VI, *Prapáṭhaka* III, *Anuváka* 10 :—

जायमानो वै ब्राह्मणस्त्रिभिर्ऋणवा जायते ब्रह्मचर्येणर्षिभ्यः यज्ञेन देवेभ्यः प्रजया पितृभ्यः। एष वा अनृणो यः पुत्री. Translation:—A Bráhmaṇa on being born becomes a debtor in three obligations to the holy saints, for the duties of a Brahmachárin; to the gods for sacrifice: to his forefathers for offspring. Or he who has a son, is absolved from debt.

Again, Nílakaṇṭha in the Samskára Mayúkha speaks to the same effect :— अत्र चोपनयनान्तानामावश्यकत्वं न स्नानादीनां । तेन यमिच्छेत्तु तमावसेद्ब्रह्मचर्यादेव प्रव्रजेदित्यादि संगच्छते ॥ Translation :—Hence the essentialness of [ceremonies ending with] the *Upanayana*, and not of the *Snána* and the rest [arises]. Therefore [the 'texts] that which he wishes he may enter,' or 'from the *brahmachárin's* state he may become a Sannyásin,' &c. are consistent with one another (p. 9, l. 20).

The Vedic passage from the Aitareya Bráhmaṇa has not been properly translated by Mr. Sutherland,[1] and the preceding remarks of Nanda Paṇḍita also require revision. Thus पुत्रोत्पादनविधेर्नित्यतया is rendered into "for the precept enjoining the production of a son being positive." This is not correct. It should be the "rule for begetting a son being *nitya* (constant or invariable)." The word *positive* is misleading. We can now at once see whether what follows are *Vidhi vákyáni* (rules), and in what sense, and further whether they are obligatory or optional will be the next question. All the above verses from the Vedas are a part of the story of Rájá Harischandra, and they are pure *arthaváda* (commendatory verses); and they are in no sense a *vidhi* (rule), either *nitya* (every-day act), or *naimittika* (act to be done on certain occasions). Both these kinds of actions are in one sense *nitya* (certain), as opposed to *kámya* (done for a particular object). Thus *sandhyá* (the daily prayers) is *nitya* (of daily occurrence), while *uparágasnána* (bathing during an eclipse) is *naimittika* (on account of a certain event). But both are *certain*, and therefore *nitya* in one sense though not in another. Marriage is purely *kámya* (with a particular object), and as Náráyaṇabhaṭṭa and Nílakaṇṭhabhaṭṭa and other authorities have stated, its performance is perfectly optional. Thus the Bhágavata Puráṇa[2] distinctly rules that abstinence or celibacy is desirable, although inasmuch as sexual desire is *nitya* (natural),[3] its regulation is to be effected by marriage. The same conclusion is also clear from the fact that among the twice-born classes, the performance of the *upanayana* is essential, and if it be not performed up to a certain time, the man becomes a *Vrátya*,[4] and he must perform *Vrátya-stoma* sacrifice for his redemption.[5] Such is not the case with marriage. Both on the texts, and on the authority of digest-writers as well as on general principles,

[1] Compare the Sanskrit passages at p. 1 Sanskrit ed. of Dattaka Mímámsá, and Stokes' H. L. B., pp. 531—532.

[2] *Skandha* xi, *Adh.* 5, v. 11, leaf 15, p. 1; see also Subodhiní by Káśináth Pádhyé, leaf 28, p. 2.

[3] Prof. M. Williams applies the *nityatá* (see p. 486 of his Dictionary) to this desire; but the word does not in this connection signify perpetuity or continual repetition as he puts it there; but it means natural or innate, as Śridhara-Svámin puts it *rágatah*, (from the [natural] love of the thing).

[4] Yájñavalkaya, chap. i. 38 (Part I, p. 102, Part II, p. 165).

[5] Áśvaláyana Grihya Sútra, 1, 19, 6—7, Cal ed., pp. 81 and 82; see Práyaschitta Mayúkha, Benares ed. p. 119.

it is thus clear that marriage is a *kámya* rite which may be performed at the option of the individual.[1] If this be so, adoption, which is but a secondary mode for attaining the same end, is necessarily a *kámya* and not a *nitya* ceremony, in the sense in which Nanda Pandita uses it; and it is therefore not essential or peremptory. The Dattaka Mañjari[2] after discussing the whole question arrives at the conclusion that the making of *putra-pratinidhi* (a substituted son), such as a Dattaka son, is essentially a *kámya* ceremony.

In its very nature therefore it cannot be obligatory in its performance in the sense in which it is now understood by European writers.[3]

[1] What is *kámya* may be seen from the Mímámsá Darśana, IV, 3, 20—24 pp. 502—504.

[2] The Dattaka Mañjarí (a work of Bálkrishna, son of Devabhadra Díkshita, surnamed Palniṭkara) concludes this subject in the following words :—

तस्मादन्वयव्यतिरेकाभ्यां निरुक्तपिण्डोदकक्रियाहेतुकः उक्तवाक्यैर्विहितः पुत्रप्रतिनिधिः काम्य एव। कामना चात्र जीवतो वाक्यकरणान्मृताहे भूरिभोजनात्। गयायां पिण्डदानाच्च त्रिभिः पुत्रस्य पुत्रेत्यादिः। वाक्यप्रतिपाद्यगुणशालिपत्न्याद्यधिकारिभ्यः पूर्वाधिकारितां प्राप्स्यमानपुत्रप्रतिनिधिकर्तृकमद्घटितश्रद्धेशकपिण्डोदकक्रिया भवत्वितीच्छारूपा ग्राह्या।

Translation :—Therefore both by an *anvaya* (an affirmative proposition) and *Vyatireka* (a negative proposition), [the act of securing] a substitute of a son enjoined by the said texts for [securing] the offering of the necessary [libations of] food and water, is optional. The motive in the present case should be taken to be the desire [of the adopter] that the offering [the libation of] food and water to three ancestors, including himself, may be made by the succedaneous son, who will have priority over persons like the widow authorized [to perform funeral rites], and who will possess the qualities mentioned in texts like [the following] : 'The sonship [or filial duty] of a son [lies] in three [things]; obeying the commands [of the father] during his lifetime, feeding [the Bráhmaṇas] on the anniversary of his death; and offering [a libation of] food at Gayá.'

The same result is deducible from the remarks of Krishnabhaṭṭa, commentator on the Nirṇayasindhu, namely, that an adoption is for a perceptible object. Thus in discussing the question of the necessity of permission to a widow in the matter of adoption, he adduces the following argument in support of his conclusion that the permission refers to a wife, and not to a widow, thus :—किंच पुत्रदानं नादृष्टार्थमिति स्पष्टमेव पुत्रप्रतिनिधीनाहुः क्रियालोपान्मनीषिणः इति वाक्ये क्रियालोपभयात्मकहेतूपादानात्। Translation :—Again, it is clear that the gift of a son is not for an *adṛishṭa* (unseen or spiritual) purpose; for in the text '[These] the wise declare to be the substitutes of a son [to be accepted] out of the fear of funeral rites failing,' there is a reason assigned [for securing succedaneous sons], viz., the fear of funeral rites failing.

[3] For this well known proposition of the Dharmaśástra, see the following amongst other authorities :—

The Bhagavat-gítá chap. xvii., v. 2 :—

काम्यानां कर्मणां न्यासं संन्यासं कवयो विदुः॥ सर्वकर्मफलत्यागं प्राहुस्त्यागं विचक्षणाः॥ २॥

Taittiríya Áraṇyaka, 10th *Prapáṭhaka*, 10th *Anuváka*, 21st Rich. (pages 816, 817, Calcutta ed.) —

न कर्मणा न प्रजया धनेन त्यागेनैके अमृतत्वमानशुः॥

Adhyátma Rámáyaṇa, *Uttara Kánḍa* chap. v., v. 21 :—

सा तैत्तिरीयश्रुतिराह सादरं न्यासं प्रशस्ताखिलकर्मणां स्फुटम्। एतावदित्याह च वाजिनां श्रुतिर्ज्ञानं विमोक्षाय न कर्मसाधनम्॥ २१॥

This being so on the authorities, it would be useful to look at the matter in its other aspects. If the rite of adoption were obligatory, a husband could not, so far as his worldly interests go, prohibit his wife from adopting. But it is now held that he can do so.[1] For a man being held free to dispose of his property by will, he may so far affect the descent of that property, that by prohibiting his wife to adopt, he may prevent a son adopted after such a prohibition from succeeding to his own property. It seems clear however on the authorities that the effect of his prohibition cannot go further. Because, above all authorities, rises the religious authority; and, as will be seen further on, the husband's prohibition in regard to all virtuous acts would be nugatory. If therefore the wife or widow adopts, the gift and acceptance be completed, and the subsequent religious ceremonies be performed, the adoption will be good religiously, and will regulate the descent of the widow's property and also that of the collaterals. Again, if adoption were peremptory, or obligatory, as it is sometimes described, a widow could be compelled to adopt, where her husband should happen to have enjoined his wife to do so. But it has been held, and I think rightly, that a widow in such circumstances could not be so compelled.[2]

In regard to the question of prohibition, the matter may also be usefully viewed from another stand-point. There are certain religious acts in regard to which the Hindu wife or widow would be bound to disobey her husband; and there are other religious acts in regard to which she would be justified by the Śástras, if she did disobey him. Thus, if a twice-born were to prohibit his wife from performing the *Upanayana* of a son, the wife would be bound by the Dharmaśástra to perform the ceremony in defiance of her husband. The caste-usage would support her, and she could charge the family estate with defraying the proper expenses attendant on the ceremony. Because, if after a certain period, the *Upanayana* remained unperformed, the boy would become *patita* (degraded), and be expelled from his caste;[3] or going still further, a twice-born Hindu would himself become liable to expulsion from his caste or class, if he left his son's *Upanayana* unperformed after a certain time.

But in regard to other religious acts like marriage, the performance of which though productive of religious merits is optional, she would be justified in setting aside her husband's commands in order to carry out those of their religion. Thus she could perform *Śráddhas*, go on pilgrimages to holy places, or hear the Puránas read or distribute proper *Dána* (gifts), even if she have been commanded by her late

[1] See *Bayábái* v. *Bálá alias Vyankatesh*, 7, Bombay H. C. R. (A. C. J.) App. I.

[2] *Bamundoss Mookerjea* v. *Mussamut Tarinee*, 7, Moore E. I. Ap. 169, especially the remarks at p. 190.

[3] See above p. 459 note.

husband not to do so. For, a Hindu, who would counsel his wife to disobey her religion, would be so far treated by the Dharmaśástra as a man of unsound mind. In matters of adoption, it would be equally so; for adoption in so far as it would directly tend to increase religious acts and ceremonies, would be a commendable act, the performance of which the Hindu religion would encourage.

In reference to this part of the subject, a few more facts must be noted. Marriage is a *Saṁskára*, though an optional one, whereas adoption by itself is not a *Saṁskára* but only an auxiliary religious ceremony, for creating a substitute-son. Yájñavalkya does not mention the begetting of a son amongst the things to be performed by a *gṛihastha* (householder) (chap. I. vv. 97—128); and the subject of adoption is treated by him in the portion relating to *Vyavahára* (civil law), where he considers the substitutes of a natural-born son; and he enumerates the adopted as one of them. Manu Smṛiti does the same. The subject of the adopted son is treated of there in chapter IX., whereas all the *Saṁskára* ceremonies, whether essential or non-essential, are described in chapters 2, 3, 4 and 6.[1]

To return: the next question for consideration is—Who can adopt? My answer is that so far as the texts and usages go, any person, male or female, may adopt. Atri[2] and Manu[3] counsel adoption for the performance of certain *Śráddha* ceremonies and for the perpetuation of the name. A son so adopted is necessary for both the husband as well as the wife, because all the funeral obsequies are required for both. And if the object of the performance of those obsequies is to be attained by other means, those means are equally open to both: what a widow can perform for her salvation, the same can be performed by the widower. There is no difference whatever in that respect between the two. As regards *Śráddhas*, the son serves both. The widow in making the adoption gets a son, who stands to her in a filial relation as well as to her deceased husband. When both are living, the husband is the principal mover. The wife may or may not join in the ceremony. As between the husband and wife, the right of receiving rests with the former; but if he be *patita* (fallen), or have become a *Sannyásin* (an ascetic), it would appear that the wife would be competent to receive on her own authority just as after the death of the husband. If, however, the husband be neither a *patita* (fallen) nor a *Sannyásin* (ascetic), the wife cannot take in adoption without his permission.

---

[1] See Vishṇu Smṛiti, where adoption is spoken of in chs. xv. and xvii., while *Saṁskáras* are treated of in chs. xxvii. to xxxiii.; Vasishṭha Smṛiti—adoption is mentioned in chs. xv. to xvii., after the *Saṁskáras* in chs. vii to xii.; Gautama Smṛiti—adoption in ch. xxix., and *Saṁskáras* in chs. ii. to ix.

[2] Calcutta Ed. p. 37 Part I.

[3] Chap. ix., v. 180.

What the wife may not do, the widow can do; for from the very necessity of the case, after the husband's death, the widow requires no such power from her husband. A text of Vasishtha,[1] which apparently lends color to the opposite view, has been so construed by *Gauda* writers that according to their interpretation a widow can, under no circumstances, make an adoption except with the express *anumati* (permission) of her husband. This however is not correct. The text applies to the wife and not to the widow; and so it has been construed by the *Nibandhakáras* and other writers who are followed on this side of India. Thus Kamalákara in the Nirṇayasindhu[2] after quoting the above text of Vasishtha observes:—इदं च भर्तृसत्त्वे। अन्यथा दद्यान्माता पिता वा यं स पुत्रो दत्रिमः स्मृत इति वत्सव्यासवचोविरोधः स्यात्। दानं प्रतिग्रहोपलक्षणम्। Translation:—This [text applies] where the husband is living; otherwise there will be a contradiction [between this text and] the text of Vatsa, and Vyása [to the effect that] 'he is to be known as a given son, who is given by his mother or father.' Gift here is illustrative of acceptance.

The Víramitrodaya says, l. 188 p. 2 ll. 6 to 16 and l. 189. p. 1 ll. 1, 2:—

तथा च वसिष्ठः। शुक्रशोणितसम्भवः पुरुषो मातापितृनिमित्तकस्तस्य प्रदानविक्रयपरित्यागेषु मातापितरौ प्रभवतः। न त्वेकं पुत्रं दद्यात्प्रतिगृह्णीयाद्वा। स हि सन्तानाय पूर्वेषां न तु स्त्री पुत्रं दद्यात्प्रतिगृह्णीयाद्वान्यत्रानुज्ञानाद्भर्तुरिति। अत्र भर्त्रनुज्ञां विना स्त्रियाः पुत्रप्रतिग्रहनिषेधाददत्तानुज्ञे भर्तरि मृते विधवया कृतः पुत्रो दत्तको न भवतीत्याहुस्तन्न। अपुत्रस्य गत्यभावात्पुत्रकरणस्यावश्यकत्वश्रवणाच्छास्त्रमूलकतदनुज्ञायास्तत्राप्यपेक्षितेः। न चैवमनुज्ञानादन्यत्रेति व्यर्थम्। व्यावर्त्यभावाच्छास्त्रीयानुमतेः सर्वत्रावश्यकत्वादिति वाच्यम्। मुमुक्षोः पत्न्यन्तरे पुत्रवतो वानुज्ञाया असंभवाद्भार्या यदि स्वपुत्रार्थमेव यतेत तां प्रतिषेधस्य चरितार्थ्यात्। सर्वासामेकपत्नीनामेका चेत्पुत्रिणी भवेत्। सर्वास्तास्तेन पुत्रेण प्राह पुत्रवतीर्मनुरिति पुत्रकार्यश्राद्धादेः सपत्नीपुत्रेण सिद्धे भर्त्रनुज्ञां विना तादृश्या पुत्री न कार्यः। उभयोरपि तत्र कार्यस्य तेन निष्पत्तेः। भर्तुर्हि स औरस एव मुख्यः तस्या अपि दत्तकद्वौण इति तादृश्यभर्त्रनुमतिमन्तरेणेतरो न प्रतिग्राह्य इति तात्पर्यार्थः। वस्तुतस्तु भ्रातॄणामेकजातानामेकश्चेत्पुत्रवान्भवेत्। सर्वांस्तास्तेन पुत्रेण पुत्रिणो मनुरब्रवीदिति वचनवदेतस्यापि भ्रातृपुत्रस्य गौणदत्तकपुत्रत्वादिसम्भवेऽन्यः पुत्रप्रतिनिधिर्न कार्य इत्यर्थकतया मिताक्षरास्मृतिचन्द्रिकादौ व्याख्यातत्वाद्भर्तुरिति जीवति भार्यया स्वातन्त्र्येण तदननुमतौ न पुत्रीकरणीय इति भर्तुरनुज्ञानादन्यत्रेत्यस्यार्थः। मृते तु तस्मिन् यत्पारतन्त्र्यं तदनुमतिरेवापेक्षिता। एवं सति दृष्टार्थता भवति प्रतिषेधस्य। तस्मादददत्तानुज्ञे मृतेपि भर्तरि भार्यया दत्तकादिकरणमविरुद्धम्।

Translation:—So also Vasishtha: "Man produced from virile seed and uterine blood proceeds from his father and mother, as an effect [from its cause]. Therefore his father and mother have power to give away, sell or abandon him. But no one should give or receive an only son; for he [represents] the continuity of the forefathers. Nor should a woman either give or receive a son without her husband's permission."

Here [*i. e.* in reference to this] it is said that inasmuch as the taking of a son [in adoption] by a female without her husband's permission is prohibited, a son adopted by a widow whose husband died without giving permission does not become a

---

[1] Vasishtha.—न स्त्री पुत्रं दद्यात्प्रतिगृह्णीयाद्वान्यत्रानुज्ञानाद्भर्तुः॥ Translation:—A female should not give or receive a son, except by permission of the husband.

[2] *Purvárdha*, 3rd *Parichchheda*, leaf 9, p. 2, lines 5 and 6.

[valid] *dattaka* (adopted son). [But] that cannot be ; for even there, [*i. e.* in the case of the husband dying without giving permission], his [*i. e.* the husband's] permission being based on *Śástra* (law) cannot be absent, inasmuch as the necessity of adoption by a sonless man who has no [prospect of] salvation is [expressly] enjoined. It cannot be said that in this way [the words] ' without permission' became nugatory, inasmuch as the permission based on law [*i. e.* arising out of a legal presumption] being imperative in all cases, [the above prohibition] will have no scope. For, that prohibition has scope in the case of the wife of a *Mumukshu* (one weaned from the world and wishing nothing but emancipation), or of one who has a son by another wife; there being no possibility of the husband's permission [of adoption in such a case]. Such a woman cannot adopt without her husband's permission ; because all that a son does, such as *Śráddha* (oblation) and the like is [equally] done by the son of a cotemporary wife, who in accordance with the text " if one out of several co-wives get a son, Manu declares that the rest become mothers by means of that son," is useful to both [the mothers]. That son being legitimate is a principal one to the father, and a secondary one to her [*i. e.* the stepmother] just as an adopted son is [to the father as well]. Therefore the substance [of the prohibition] is that such a woman cannot adopt another without her husband's permission. In reality just as the Mitákshára and the Smriti Chandriká have interpreted the text " if one out of several brothers get a son, Manu declares the rest to be fathers by means of that son," as enjoining that where it is possible to get a brother's son as the secondary adopted son, no other should be accepted as the substitute of a son; so, similarly, the words ' without the husband's permission' here mean that while the husband is alive, the wife should not on her own authority adopt a son not approved of by him [*i. e.* the husband]. After he is dead, the permission of those alone will be necessary upon whom [the widow is] dependent. In this way the prohibition is for worldly reasons. Therefore even though the husband died without giving permission, an adoption by the widow would not be objectionable.

Anantadeva in the Samskárakaustubha goes still further. He says:—

वस्तुतस्तु नापुत्रस्य लोकोऽस्तीत्यादिशास्त्रेण पुत्रकरणस्य दोषहेतुत्वे भर्त्रनुज्ञारहितां प्रति पुत्रीकरणाभ्यनुज्ञापरं अदः शास्त्रं, न तु निषेधपरम्, शास्त्रप्राप्तनिषेधस्यान्याय्यत्वात् पर्युदासे लक्षणाप्रसङ्गादिति सुधीभिर्बोध्यं ॥ ६

नच " न स्वातन्त्र्यं क्वचित् स्त्रिया" इति "अभावे ज्ञातय" इति च भर्त्रभावे ज्ञातिपरतन्त्रत्वात् नापुत्राया विधवाया अधिकारः पुत्रप्रतिग्रहे सिध्यतीति शङ्क्यं तुमप्यर्हम्। रक्षेत्कन्यां पिता विन्नां पतिः पुत्रास्तु वार्धके। अभावे ज्ञातयस्तेषां न स्वातन्त्र्यं क्वचित्स्त्रिया" इति याज्ञवल्क्यवचस्तद्व्याख्यानोपक्रमे मिताक्षराकारेणोक्तं पाणिग्रहणात्प्राक् पिता कन्यामकार्यकरणाद्रक्षेत् इति एवं च निषिद्धाचरणात् स्त्री निवर्तते तत्तदवस्थायां तत्तदधिकार इति वचनस्वरसात् व्याख्यानाच्च प्रतीयते नतु विहिताचरणप्रतिबन्धेपि ।

न च नित्यकाम्यव्रतानामाचरणे ज्ञातिपारतन्त्र्यकृतो विधवानामधिकारप्रतिबन्धः क्वचिद्देशे कैरपि शिष्टैरभ्युपेत्य वाह्यते ॥

किञ्च पक्षद्वयावसाने तु राजा भर्ता प्रभुः स्त्रियाः ॥ इति मिताक्षरोदाहृतवचनेन च तदुक्तरीत्या ज्ञातिरहितानां विधवानां राजाज्ञां विना व्रतादावधिकाराभावः स्यात् न च व्रतादेः पुत्रप्रतिग्रहे कश्चिद्विशेषः इति महत् पाण्डित्यमाविष्कृतं धर्मशास्त्राभिज्ञाभ्रुन्यैः ।

नच प्रतिग्रहमन्त्राभावेनाधिकाराभावोक्तिरपि घटते अनुज्ञायां सत्यामसत्यामपि तस्यामुक्तरीत्या अधिकारनिर्णये रथकारवन्मन्त्राध्ययनकल्पनासंभवात् एतेनानुज्ञायां सत्यामन्त्रकप्रतिग्रह इति निरस्तं।तस्माद्विधवया स्वीकृतः पुत्रो वृत्तिधनभाक् भवत्येव इति तादृशब्राह्मणस्य वृत्तिप्रतिबन्धं कुर्वतः स्वस्यैवानर्थं यतन्ते यो वै ब्राह्मणवृत्तौ तु प्रतिकूलं समाचरेत् । विड्भुजां तु कृमीणां स्यादेकः संवत्सरान् बहून् इति शास्त्रादित्यलं पल्लवितेन. (Samskárakaustubha, leaf 45, pp. 1 and 2.)

Translation :—In reality this precept (viz., the text of Vasiṣṭha which says that a woman cannot give or receive a son without the command of her husband) should be understood by the intelligent not as a prohibition but as intended to require a command [of some one] for adoption in the case of a woman who has had no permission from her husband; inasmuch as there can be no prohibition of what has been commanded, [as the adoption of a son is], owing to the failure to adopt being declared sinful by the text, "there is no higher world for a sonless man," &c., and inasmuch again as [treating the precept] as a *Paryudâsa* (a negative proposition) would imply a *Lakshaṇá* (metaphorical interpretation).

It cannot at all be objected that a childless widow can have no right to adopt a son in so far as in the absence of her husband she is dependent on his kinsmen, in accordance with [the following words], "there is no independence to a woman:" and "in his absence kinsmen,"[1] &c. Yájñavalkya says:—"A female shall be protected by her father in her maidenhood, by the husband in her married state, by the sons in her old age, and in their absence by kinsmen. [Thus] a female is never independent"; and the author of the Mitákshará in commenting thereon says that the father shall guard his daughter until her marriage against the doing of something prohibited. Thus the meaning of the text as well as the comment shows that a female during the several guardianships at different periods of her life is restrained from the doing of something prohibited, and not that there is any restraint on her in respect of the observance of what is commanded [by the *śástras*]. In no country is a female's dependence on kinsmen ever allowed by any learned men to restrain her in the observance of *Nitya* and *Kámya Vratas*; whereas according to the proposed interpretation, widows having no kinsmen would have no authority to observe *Vratas* and the like without the [previous] permission of the king in accordance with the text cited by the Mitákshará, viz., "on failure of both sides [that is kinsmen on the father's and husband's sides], the king is the supporter and lord of females." There is no distinction between *Vratas* and the like and the adoption of a son; but [in spite of this], much learning has been displayed on this subject by people devoid of any knowledge of the Dharmaśástra.

Nor can it be said that want of authority results from the unfitness [to recite] the Mantrás [required] for acceptance; for her right [to adopt] being determined to exist in the aforementioned manner, whether there be permission or no, she must be presumed [to be entitled] to recite mantras as in the case of the Rathakára.[2] Thus [the allegation that] the adoption [by a widow] though she have permission is [void as being] without holy *mantras* is refuted. Therefore a son adopted by a widow does by all means become the taker of wealth, and *Vritti*. Further, he who destroys a Bráhmaṇa's Vṛitti [by withholding his assent to adoption] does so at his own risk in accordance with the text "he who acts adversely to [the continuance of] a Bráhmana's *Vritti* shall be a prey for many years to insects feeding on filth." No more need be said [on this subject].

In the Datta-Darpaṇa following Kaustubha it is said:—

तथाच भर्त्रनुज्ञायाः सधवायामेवोपक्षीणत्वादुक्तप्रकारेण तत्सत्त्वेऽसत्त्वे वा विधवायाः पुत्रस्वीकारे न काप्यनुपपत्तिः ॥

Translation :—Therefore [rule about] the permission of the husband being satis-

[1] See Yájñavalkya chap. i. v. 85.

[2] From the fact of the Rathakára being commanded to worship the fires, his eligibility to recite holy mantrás is inferred in spite of his being a Śúdra; because the one is a condition precedent of the other. See Púrvamímámsá Rathakára Adhikaraṇa. Calc. Ed. p. 630.

fied [literally, exhausted] in the case of the wife, there is no difficulty in the way of the widow receiving a son, whether there is permission or not, as above explained.

The Dattaka Chandriká of Kubera (p. 51, lines 8—11) holds that "the अनुमति (permission) is to the wife while the husband is alive; and she can adopt without such permission, when the husband is *proshita* (gone abroad), or is dead." Kṛishṇabhaṭṭa in his comment on the Nírṇayasindhu supports Kamalákara by refuting the reasoning of the Gauḍa writers. The Mayúkha[1] follows Kamalákara.

The only work now quoted on the other side is the Dattaka Mímámsá of Nanda Paṇḍita,[2] whose three arguments, if they can be so called, have been fully answered by the above writers. Besides, I have elsewhere shown historically that Nanda Paṇḍita's work was not known to the Śastris in this Presidency until 1827 as noted by Mr. Borradaile. That Nílakaṇṭha and Kamalákara have not, in their numerous works, ever specially noticed it, shows that it was of no importance whatever in their time amongst the *Dákshiṇátya* (Southern) community. Anantadeva and his successors answer the objections of the Gauḍas: but even they do not notice the Mímámsá of Nanda Paṇḍita by name. And I find that Surajrám Śástri, so late as 1845, says distinctly while writing in reference to this very question, that though Nanda Paṇḍita's Dattaka Mímámsá says the widow has no right, still the aforesaid works (Víramitrodaya, Mayúkha, Kaustubha, &c.) say that she has the right, and that the *Vyavahára* (practice) is going on accordingly.

It appears to me that some confusion has been created by very loose and indefinite writing regarding the duties of a son; and the performance of *Śráddhas*, &c. by the adopted son. Sir T. Strange says[3]:— "The better reason, therefore, perhaps is, that the necessity of a son to celebrate the funeral rite regards the man, rather than the woman, who depends less for redemption upon such means; so that, whenever a woman, duly authorized, adopts, it is on her husband's account, and for his sake, not her own." Mr. Justice Strange goes further, and says:—"Unmarried males of whatsoever age, and females, whether unmarried or married, are not in danger of *Put*. No adoption on their account is hence necessary; neither would such adoption be valid."[4]

For these propositions no authorities are quoted by Mr. Justice Strange. Sir T. Strange quotes Manu, chap. V., v. 160. But this verse is intended to dissuade a female who has lost one husband from marrying again or having recourse to *niyoga*; and it has nothing to do either with adoption or the performance of obsequial rites. Colebrooke (463), who is referred to next, does not refer to the subject of *Śráddha*, &c. The note at page

[1] Part I., p. 42; and Part II. p. 57 ll. 30—37 and p. 58 ll. 1 and 2.
[2] Page 2 l. 15 to p. 4 l. 2. [3] Elements of Hindu Law, vol. I., p. 79, 3rd ed.
[4] Manual of Hindu Law, 2nd ed., p. 18.

91 of volume 2 of Sir T. Strange by Mr. Ellis, which is next cited, is equally loose. It says: "to render it [adoption] beneficial to the husband (for the widows can derive no advantage from it)," &c. All this is a very unsatisfactory mode of stating the Dharmaśástra. The *Gayá Śráddha* of the mother is as necessary as that of the father; and the two spots where that *Śráddha* is performed, are distinct—the one is in Behar and the other in Gujarátha. The statement of Mr. Sutherland is also not correct. The *Mahálaya Śráddha* and Tírtha and such other *Śráddhas* of both the father and mother must be performed together; but the annual *Śráddhas* of the mother and the other two female ancestors must be performed separately on the anniversary day of the mother's death, just as those of the father, grandfather and the great grandfather are performed on the anniversary day of the father's death. Moreover, in the *Nándi Śráddhas* the mother's *párvaṇa* comes first, then the father's, and lastly, that of the mother's father. This confusion of the mother's position and her necessity as to *Śráddha* has, it appears to me, led to a complete misunderstanding of the whole subject of adoption by females.

To sum up: a *Śráddha* produces equal benefit to both the father and the mother. When there is a son, he must perform it for both, and does so perform it, as all the *Śráddha* works and our current practice shows. If there be no son, a man can follow several ways to get his own salvation, or may adopt a son both for getting his *Śráddha* performed and for the perpetuation of his name. The same is the case with the man's wife. During his lifetime, her identity is sunk in her husband's. After his death, she may follow the several ways above indicated for her salvation as well as his, or both follow those ways and also adopt a son who will be her own as well as her husband's son.

A Brahmachárin would be competent to adopt, because he has the same interest in securing the performance of obsequies and the perpetuation of his family name as a sonless married man has. There is nothing in the Dharmaśástra to disqualify him from the performance of the rite of adoption, as there is in the case of a *sannyásin*.

In the view of the nature of adoption already given, minority cannot be a bar to adoption; for, although adoption does confer temporal benefits, it cannot on that account be considered a matter of a civil contract. It is a ceremony like marriage, and it confers temporal as well as spiritual benefits.

The next question is, who is the proper person to give in adoption. This is answered by Manu chap. IX. v. 168.[1] The giver must be (1)

[1] Manu, IX., 168:—"माता पिता वा दद्यातां यमद्भिः पुत्रमापदि ॥ सदृशं प्रीतिसंयुक्तं स ज्ञेयो दत्रिमः सुतः" ॥

Translation:—He whom his father or mother gives to another as his son, the donee being in distress, provided the boy be of the same class, affectionately disposed, is considered as a son given.

the father with the mother, (2) or the father alone, or (3) the mother if the father be dead,[1] or have given his assent, or be incapable of giving his assent. No third person seems, on the above authorities, to have the powers of giving.[2] It has been held[3] that the power of giving may be delegated. But some question[4] the propriety of this. Usage must decide, and it seems to favor delegation.

The widow's power of giving in her own right has, by some, been questioned, but, as it seems to me, on very insufficient grounds. In point of fact, even the texts by themselves are more clearly in favour of her competency to give, than her ability to take, and all the Digests held authoritative on this side of India, are equally pronounced in her favour. Nanda Pandita himself, though he would wish for permission for a widow to take, is obliged to hold that Manu's text being express in favour of the mother *or* the father being able to give, the widow has the right to give.[5]

The Dattaka Chandriká too[6] supports the right of the wife as well as of the widow to give on the authority of Manu and Yájñavalkya; but he qualifies the right by the prohibition of the husband, and supports the husband's authority to prohibit by the above cited text of Vasistha. But as the text of Vasishtha is opposed to Manu's text, it (the former) cannot prevail. For the Veda enjoins obedience to Manu above all other Smritis. Angiras says[7] that that Smriti which is opposed to Manu,

---

[1] See also Yájñavalkya, chap. ii. v. 130.

Part I. p. 138, Part II. p. 219 and note 3.

Also Víramitrodaya, l. 188 p. 2.

*Vyasa* and *Vatsa* (see Nirnayasindhu, 1st half, 3rd *Parichchheda*, leaf 9, p. 2) permit either the father or the mother to give: Vishnu (chap. xv. Calcutta ed. 1st Part, p. 93) says:—"स च मातापितृभ्यामस्य दत्तः" Translation:—"He is one given by the father and mother." So also Vasishtha. He uses the words यं मातापितरौ दद्याताम्. Translation:—He who has been given by the father and mother (Calcutta ed., 2nd Part, p. 488).

[2] *The Collector of Surat* v. *Dhirasingji Vaghbáji*, 10 Bombay H. C. R. 235.

[3] *Vijiarangam and another* v. *Lakshuman and another*, 8 Bombay H. C. R. (O. C. J.) 244.

[4] Púrva Mímámsá, 6th *adhyáya*, 3rd quarter.

[5] Dattaka Mímámsá, p. 19, Mr. Sutherland's note 12 (Stokes' H. L. B. p. 573) is not correct. The proper reading is *Mánava* and not Gálava. This reading moreover removes all the inconsistencies in the three paragraphs noted by Mr. Sutherland. The story of Gálava, a son of Viśvámitra, who was offered for sale by his mother, and from whose sale, king Satyavrata induced his mother to desist, by offering her and her children sufficient food to live upon, is given in the Devi-Bhágavata, 7th *Skandha*, 10th *Adhyáya*. And it is useful as showing that in distress a mother could sell her children when her husband was away.

[6] P. 51, lines 8—13. Yáj. II. 1. 30 (दद्यान्माता पिता वा यं स पुत्रो दत्तको भवेत्) and (मातापितृभ्यामुत्सृष्टस्तयोरन्यतरेण वा) which is Manu chap. ix. v. 171, and not a text of Yájñavalkya as Mr. Sutherland supposes. (See Stokes' H. L. B. p. 636, para. 32.)

[7] See above, Introduction p. xlvi.

is extinguished. All the digest-writers quoted by me above also apply the text of Vasishṭha to a *Sadhavá* (wife), and not to a *Vidhavá* (widow).

The father and mother in the above remarks must be the boy's father and mother. For Krishṇabhaṭṭa says that no other person can give. A grandfather could not according to these texts give away his grandson. Nor could a man or a woman after once taking a son give him away.

The person to be adopted is the next subject for consideration. As already stated, it appears to me that selection of the adoptee has always been a matter regulated by the will of the adopter. According to the Vedas and Manu, it is clearly so still; and the changes recommended during the middle period have nowhere obtained the binding force of law. Thus beginning with Manu (IX., 168), it is entirely a matter of discretion with the adopter whom he or she should adopt. The several restrictions that have since been suggested in works on that subject are later developments of Smṛiti-makers, who wished to liken the substitute son to the original son as far as possible according to their notions. Thus, the earliest lawgiver, viz. Manu, has given no direction whatever to fetter the adopter in the matter of selection, save that the adoptee should be *sadṛiśa* (proper or worthy). I am not sure that the interpretation of this term as a person of the same *Játi* (caste) suggested by Kullúka and others is the one contemplated by Manu; for it is not quite clear why, if according to Manu, a Bráhmaṇa could beget a Kshatriya son on a Kshatriyá wife, or a Vaiśya son on a Vaiśyá wife, he should not be able to adopt a son of either of those classes. Again, Manu (as interpreted by Vijñáneśvara)[1] recommends the adoption of the son of a brother without stating whether that brother should be of the same or of a different class. The restriction of *játi* (caste) was unmeaning, so long as intermarriages between the four classes were allowed by law; and the restriction only came to have a different meaning when such intermarriages began to fall into desuetude, and were ultimately discontinued.[2] It is clear that as we leave Manu behind, and approach our own times, the restriction as to *Sadṛiśa* (proper or similar) has come to mean one of the same class; and that one of a different class is not considered proper for adoption. Within the class itself, some Smṛiti and Digest writers have laid down rules for regulating the discretion of the adopter in the matter of selection. Thus a brother's son is declared to be the first eligible adoptee. Failing him, a *Sagotra-Sapiṇḍa*, an

[1] Manu chap. ix. v. 182; Mit., chap. ii., leaf 56, p. 1, lines 15, 16.

[2] Medhátithi's explanation supports the above theory; see above Part I, p. 39, line 17; also Dattaka Chandriká, p. 48, lines 18—25.

*asagotra-sapiṇḍa*, a *sagotra-asapiṇḍa*, and an *asagotra-asapiṇḍa* are said to be eligible in order. The recommendation of the brother's son is made to rest on a far-fetched reference to Manu ch. IX. v. 182,[1] which has nothing to do with adoption; and the order of eligibility after the son as above stated is evolved by digest writers out of Sáunaka's text,[2] which says that a *sapiṇḍa* should have preference before an *asapiṇḍa*. All these texts and comments, however, are simply deemed by the community recommendations, in no way obligatory on the adopter. To use the words of Sir T. Strange,[3] "the selection is finally a matter of conscience and discretion with the adopter, not of absolute presumption, rendering invalid an adoption of one not being precisely him who upon spiritual considerations ought to have been preferred." Mr. Sutherland says that the right of the brother's son to a preference is admitted, and may be regarded as a received rule of law. He cites no authorities for this position; and there is none in force in India. Happily the question has now been set at rest in conformity with the usages of the people by the Privy Council decision in the case of *Śrimati Uma Devi* v. *Gokoolanand Das Mahapatra*.[4]

Besides the above restrictions on adoption, there are others that have been suggested. These may all be well grouped into four divisions, in reference to (*a*) the class, (*b*) the age, (*c*) the relationship of the adopted with the adopter, and (*d*) the status of the adoptee in his natural family.

I shall now consider each division separately, and trace their history, and show how far they are now observed by the people.

As regards class, it is said that the adopter and the adopted should both belong to the same class.[5] This provision is regarded only so far that its violation would not nullify the adoption but would deprive the adopted of his right to inherit. Vṛiddha-Yájñavalkya directly counsels the adoption of one of a different class, when one of the same class cannot be had. Such a son can only perpetuate the line, but he can neither inherit the property nor offer the *Piṇḍa*.[6] Viewing this matter historically, one may here mark the gradual development of this limitation. Manu simply uses the word *sadṛiśa* (worthy or similar) to qualify the son to be given: in the original text there is no reference to class. Vasishṭha says he should be *adúre bándhavam*, which Krishṇabhaṭṭa interprets by सन्निहितदेशवर्तिपित्रादिकम् ज्ञातिकुलशीलं [Translation:—One whose father, &c. are residents of a neighbouring country, and whose family and character is known.]

[1] See Mit. chap. ii. l. 66, p. 1 ll. 15, 16.

[2] Part I. p. 40 ll. 14, 15; Part II. p. 53, ll. 3—6.

[3] Vol. I. p. 85.

[4] V. Law Reports, Indian Ap. 40.

[5] See Yáj. II, 133 Part I. p. 138; Mayúkha, Part I. p. 39; Datt. Mím. (Stokes' H. L.) See II, para. 22, and 25 Dattaka Chandriká see I, paras. 13 and 14.

[6] See Dattaka Chandriká, p. 49, lines 4—6.

Śaunaka[1] and Kátyáyana[2] say that the adoptee should be a *savarṇa* (one of the same *varṇa* or class). This would imply that the adopter had only to attend to the four divisions of the Áryáns. Yájñavalkya goes one step further, and introduces the word *Játi*[3] (caste), instead of *varṇa* (class). The Samskárakaustubha goes further still, and says that the adopter should not only be one of the same *varṇa* and *Játi*; but one of the same sub-division of a *Játi* (caste) based on the difference of domicile such as Gurjara, Maháráshṭra, &c.[4] He is also followed by Gopínáthabhaṭṭa and Krishṇabhaṭṭa. No specific text is cited for this extension; but the statement is perfectly consonant to current usage.

A violation of the above provision does not, as I have said before, nullify the adoption altogether; but it only renders it less efficacious, and gives the adoptee a right to maintenance from the adopter's estate.[5]

As regards age, there is no restriction whatever. The only text restricting age is one said to be from Káliká Puráṇa; but Nílakaṇṭha considers the said passages to be spurious.[6] Ananta-deva in the Samskárakaustubha also disbelieves their genuineness.[7] But he goes further, and, assuming them to be genuine, shows how they are to be applied in support of the adoption. He concludes thus: अतः कृतसंस्कारोपि पञ्चवर्षाधिकबालोपि दत्तको भवतीति सिद्धम्.

Translation :—Therefore a boy above five years of age whose ceremonies have been performed, can become a *Dattaka* (given): this is established.

The Dattaka Mímáṁsá favours the genuineness of the above passage (see pages 20—25 Dattaka Mímáṁsá). The Dattaka Chandriká like the Samskárakaustubha doubts their authenticity, but shows that when properly interpreted, they contain no restriction of age (see Dattaka Chandriká, page 54, line 5 and p. 56 line 15.). Kamalákara in the Nirṇayasindhu says that a boy of more than five years may be given, if he be willing to be given in adoption. This shows that he upholds such adoptions in spite of the Káliká Puráṇa on the authority of the Vedic[8] texts. In his Viváda Táṇḍava, the *Sapiṇḍa* relationship of one so adopted is laid down; and this assumes the adoption as being duly made. Kamalákara thinks, however, that the *samskáras* (ceremonies) of the adopted should not have been made before the adoption.

[1] Dattaka Chandriká, p. 49, lines 1, 2; Dattaka Mímáṁsá p. 18, lines 17—19; see Devala cited by Jimúta Váhana Dáya-bhága, p. 227.

[2] Dattaka Chandriká, p. 48, l. 24.

[3] Yájñavalkya II, 133.

[4] Samskárakaustubha, leaf 44, p. 1, line 1.

[5] Dattaka Chandriká p. 49, lines 1—6.

[6] See Part I p. 42.

[7] Leaf 45, p. 2, line 10.

[8] Nirṇayasindhu, 3rd Parichchheda, 1st half, leaf 9, p. 2 and l. 10, p. 1.

Krishṇabhaṭṭa, however, in his commentary on the Nirṇayasindhu clears up the whole question, and decides in favour of all such adoptions on general grounds. He shows that the passage from the Káliká Puráṇa as above noted is spurious; but that even if it were genuine, he points out that as it is given by some writers, it is incomplete. He supplies the omissions, and gives the complete passage as he found it,[1] and states that it refers to a son to be adopted by a king as a successor in his sovereignty and not to an ordinary son. Such a son should, he says, have his *samskáras* (ceremonies) performed by the adopter.

But except the incapacity to succeed to a Rájá, if the ceremonies be not performed, the adopted is in no other respect a *dása* or a son of any inferior status than a born-son. Krishṇabhaṭṭa himself shows that according to the Vedas, a man whose *upanayana* has been performed, may be adopted. Śunahśepa was so adopted. His *upanayana* had been performed; for if it had not been so performed, he could not have become a *dvija* (twice-born), and would not have been able to repeat Vedic *Mantras*.[2] That he did repeat such *Mantras* may be seen from the Rig-Veda Saṁhita[3] and the Aitareya Bráhmaṇa.[4] As the Vedas themselves sanction this, and the practice has always gone on in conformity thereto; all such adoptions are perfectly valid.[5]

---

[1] The passage runs thus :—

उक्तकालिकापुराणस्य राज्यार्हपुत्रपरत्वात् ॥ तस्यैव च प्रतिग्रहीतृकचूडकसंस्कार आवश्यकः । एवं हि कालिकापुराणं । न क्षेत्रजादितनयान् राजा राज्येभिषेचयेत् । पित्र्यर्णशोधने नित्यमौरसे तनयेसति असतीति छेदः ॥ औरसः क्षेत्रजश्चैव दत्तः कृत्रिम एव च । गूढोत्पन्नोपविद्धश्च भागार्हास्तनया इमे । क्रानीनश्च सहोढश्च क्रीतः पौनर्भवस्तथा । स्वयंदत्तश्च दासश्च षडेते पुत्रपांसनाः ॥ अलाभे पूर्वपूर्वेषां परान्समभियोजयेत् । पौनर्भवं स्वयंदत्तं दासं राज्ये न योजयेत् ॥ दत्ताया अपि तनया निजगोत्रेण संस्कृताः । आयान्ति पुत्रतां सम्यगन्यबीजसमुद्भवाः ॥ पितृगोत्रेण यः पुत्रः संस्कृतः पृथिवीपते ॥ आचूडान्तं न पुत्रः स पुत्रतां याति चान्यतः । चूडाया यदि संस्कारा निजगोत्रेण वै कृताः । दत्ताायास्तनयास्ते स्युरन्यथा दासतोच्यते ॥ ऊर्ध्वं तु पञ्चमाद्वर्षान्न दत्ताायाः सुता नृप । गृहीत्वा पञ्चवर्षीयं पुत्रेष्टिं प्रथमं चरेत् ॥ पौनर्भवं तु तनयं जातमात्रं समानयेत् ॥ कृत्वा पौनर्भवं स्तोमं जातमात्रस्य तस्य वै ॥ सर्वांस्तु कुर्यात्संस्कारान् जातकर्मादिकानथ । कृते पौनर्भवस्तोमे सुतः पौनर्भवस्ततः ॥ एकोद्दिष्टं पितुः कुर्यान्न श्राद्धं पार्वणादिकम् । क्रीता या रमिता मौल्यैः सा दासीति निगद्यते इति ॥ अस्यार्थः दत्ताया इति दत्ताायाः पुत्राः प्रतिग्रहीतृकचूडकजातकर्मादिसकलसंस्कारसंस्कृता एव राज्यार्हा नान्ये ॥ सम्यक् पुत्रतां राज्यार्हत्वमित्यर्थात् ॥ अन्यथा पुत्रतां यान्तीत्येव ब्रूयात् । न तु सम्यगित्यपि । अन्यथा दास उच्यत इत्यत्रापि अन्यथा ग्रहीतृकचूडकसंस्काराभावे दासस्तद्ब्राह्मण्यभागानर्हः अन्यत्र अन्यशब्दप्रयोगस्य मासमग्निहोत्रं जुहोतीतिवत्तद्धर्मातिदेशार्थत्वात् । एतमेव दासं राज्ये न योजयेदित्यभिधाय दत्तकराज्याधिकारं प्रकृत्यान्यथा दासतोच्यते इत्येतस्य संगतेरिति ॥

[2] Manu, chapter i. vv. 88—91; chapter x., vv. 126, 127, Náráyaṇabhaṭṭa's Prayogaratna, leaf 53 p. 2, lines 4 and 5; Śúdra Kamalákara leaf 1 p. 1.

[3] Maṇḍala I, *Súktas* 24, 25, (Prof. M. Müller's Ed. vol. I. pp. 242—262).

[4] 7th *Panchiká*, 14—17 khaṇḍas, Haug's vol. I. pp. 179—183; vol. II. pp. 463—469.

[5] Krishṇabhaṭṭa's work is in manuscript, and I therefore subjoin the passage referring to this subject. He therein says distinctly that a son whose *saṁskaras* have been performed, and who has had a son born to him, whether he be of the same or of a different *gotra*, may be adopted :—

Thus it will appear that the highest authority of texts as well as of digests is against restricting the age of the adoptee to any particular year. It may be noted, however, that the people generally are inclined to favour the adoption of one whose Upanayana has not been performed; just as they would rather get their children married when children. But these are mere sentiments; for cases of grown up boys being adopted are common, and they are considered perfectly valid. The fiction of sonship would seem to demand that the adoptee should be younger than the adopter, so as to make the former पुत्रत्व बुद्धयर्ह (one in regard to whom the idea of sonship would be worthy). 10

पौनर्भवस्तोमः सोमयागप्रभेदः तस्य सुतसंस्कारार्थत्वं अनाहिताग्नीनां तु तादृशयागासम्भवेपि तद्देवताकश्रुतदृष्टत्वः ॥ ब्राह्मणस्य तु न जन्मतः परिग्रहेऽधिकारः ॥ सदृशं तु प्रकुर्यात्यं गुणदोषविचक्षणम् ॥ पुत्रं पुत्रगुणैर्युक्तं स ज्ञेयः कृत्रिमः सुत इति मनूक्तकृत्रिमपुत्रलक्षणे गुणदोषविचक्षणं प्रकृतव्यवहारज्ञं न तु बालमिति मेधातिथिविरोधात् ॥ श्राद्धाकरणे दोषः तत्करणे गुण इति गुणदोषावधारणकुशलमिति सर्वज्ञनारायणविरोधात् सदृशं तुल्यं इमं पुत्रं करोमीति एकस्य पुत्रचिकीर्षा तदन्यस्याहमस्य पुत्रो भवामीति तदुभयप्रतिग्रहीतृसादृश्यवन्तं सकामं कुर्यादिति बौधायनसंवादात् । अहमस्य पुत्रो भवामीति यश्च न जातमात्रादाविति रत्नाकरविरोधाच्च तस्मात्पञ्चाधिकवर्ष एव प्रतिग्रहार्ह इत्येके । अन्ये तु एतत्सर्वं असगोत्रदत्तकपरमित्याहुः ॥ परे तु असगोत्रोपि उपनयनान्तसंस्कारोत्तरमपि परिणीतोपि उत्पन्नपुत्रोपि च दत्तको भवति बाधकाभावात् । शुनःशेपो विश्वामित्रपुत्रः स्वयमेवाभवदिति बञ्हृचब्राह्मणसंवादाच्च शुनःशेपश्चोपनीत अनुपनीतस्य वेदाध्ययनासंभवेन वैदिकमन्त्रैः प्रजापत्यादिस्तुताविन्द्रदत्तहिरण्मयरथप्रतिग्रहे च प्रवृत्त्यनुपपत्तेः । न च स्वयंदत्तक इति वाच्यम् । दत्तायास्तनया इत्यत्राद्यपदेन कृत्रिमादीनामपि ग्रहणेन भवन्मते तस्यापि निषेधात् ॥ न च श्रुतिवशाज्जातोपनयनः स्वयंदत्त एव स्वीकार्य इति वाच्यम् ॥ तर्हि जातोपनयनस्य दत्तकस्यापि दुर्वारत्वात् । श्रुत्या दत्तायाः इत्यस्याप्रामाण्योत्पत्तेश्च ॥ पितुर्गोत्रेणेत्यादेश्च प्रायशः कालिकापुराणादावदर्शनाच्च ॥ अथवास्तु दत्तायाः इत्यस्य प्रामाण्यं परंतु अन्यबीजसमुद्भवा इति यथाश्रुतार्थं दत्तादेरन्योत्पन्नत्वनैयत्यात् ॥ अतस्तेनान्यकृतगर्भाधानाद्युपनयनान्तसंस्कारयुक्तत्वं बोध्यते । बीजिनः पितुरुपनयनेऽधिकारात् अन्यकृतोपनयनान्तसंस्काराः अपि दत्तायास्तनयाः संस्कृताः कृतदत्रिमादिविधानाः निजगोत्रेणैव पुत्रतां सम्यक् यान्ति प्राप्नुवन्ति दत्रिमसंस्कारवशेन पितृगोत्रत्यागश्च मनुनोक्तः । एवं पितुर्गोत्रेणेत्यायप्यस्तु परं तु न पुत्रतां याति चान्यत इत्यस्य अन्यस्य पितृभिन्नस्य प्रतिग्रहीतुः पितृगोत्रेण पुत्रता न याति किंतु पितृगोत्रं विहायैव पुत्रतां यातीत्यर्थः ॥ चूडेति अन्यथा दासतोच्यत इति चतुर्थपादवशात् निजगोत्रेण प्रतिग्रहीतृगोत्रेण अन्यथा दातृगोत्रेण वा चूडादिसंस्काराः कृताश्चेत्तदा ते तनया दत्तायाः भवन्ति तेषां अदासता दासभिन्नता उच्यते इत्यर्थः । ऊर्ध्वमिति एतच्च यथाश्रुतमलग्नकम् । गृहीत्वा पञ्चवर्षीयमित्यनेनाविरोधात् ॥ किंतु नहि निन्दान्यायेन पञ्चवर्षप्रतिग्रहस्तावकं । तत्र प्रथमं पुत्रेष्टिः कार्या तत्र दातृगोत्रेणोपनयनपरिणयनान्तसंस्काराणां संजातत्वात् पुत्रपूतत्वार्थी पूर्नेष्टिः पालकेन विहितकर्मान्तरानुष्ठानात्प्रथमं कार्येत्यर्थः । यच्चान्यशाखोद्भवो दत्तः पुत्रश्चैवोपनायितः ॥ स्वगोत्रेण स्वशाखोक्तविधिना स्वशाखभागिति वाक्यं तन् प्रतिवेदमुपनयनपरमिति । केचित्तु । दत्तायाः इत्यादिपञ्चवचनानि द्व्यामुष्यायणपराणि तथाहि दत्तायाः इति । अन्यबीजसमुद्भवा इति अपि दत्तायास्तनयाः प्रतिग्रहीत्रा स्वगोत्रेण संस्कृता एवकृतजातकर्मादिसंस्कारा एव प्रतिग्रहीतृसगोत्रतां प्राप्नुवन्तीत्यर्थः । द्व्यामुष्यायण एकगोत्रः स इति भावः । पितुर्गोत्रेणेति । आचूडान्तं जनकगोत्रेण यः संस्कृतः सोन्यस्यैव पुत्रतां न याति किंतु द्व्यामुष्यायणोप्येकगोत्रो द्विगोत्र इत्यर्थः । चूडेति चूडातः प्राक्तनाः संस्काराश्चेत् पितृगोत्रेण जातास्तदा चूडाप्रभृतयो निजगोत्रेण कृता एव चेत्तदा दत्तायास्तनया भवन्ति द्व्यामुष्यायणा अप्येकगोत्रा इति भावः । चूडायां निजगोत्रानुष्ठानस्यैकगोत्रत्वप्रापकत्वात् ॥ चूडायां तत्तद्गोत्रिणः प्रत्यार्षेयाशिखाकरणोक्तेः । अन्यथाऽदासता दासत्वैलक्षण्यमात्रमुच्यते । एतस्य रिक्थग्राहित्वात् नतु पुत्रत्वमित्यर्थः । ऊर्ध्वमिति स्तावकम् । संस्कारेभ्यः प्रथमं पुत्रेष्टिः कार्येत्यर्थः । यथा च प्रतिग्रहीतृगोत्रेण चूडाकर्मे समानगोत्रत्वप्रापकं तथा तद्गोत्रेण तच्छाखोक्तविधिनोपनयनं तत्समानशाखीयत्वप्रापकमित्याहान्यशाखोद्भवो दत्त इतीत्याहुः ॥ परंतु एतेषां द्व्यामुष्यायणपरत्वेपि न केवलदत्तके विरोध इति शिवम् ॥ प० १६ पृ० १ पं १२ प० (MS.)

See also Samskárakaustubha, leaf 46, where the same conclusions are also supported.

The next question is the relationship of the two parties, the adopted and the adopter. In regard to this, I regret to observe that some courts have fallen into most curious errors, in several instances following in the wake of two modern writers, whose writings themselves, it may further be said, have been misunderstood and mistranslated. Before proceeding to notice those errors, I may remark that the law on this subject is very simple. All that the people require is that the boy should look like a born-son. He should be a junior in rank and years to the adopter, so that when adopted, he may be able naturally to take up his place in the Hindu family and behave like a son. If I were writing for a purely Hindu community, I should stop here. But such not being the case, I must enlarge to a certain extent on this point. A Hindu has to bow before his elders on stated occasions. He has to beg alms; he has to make *namaskáras* (low salutations); he has to observe certain forms in addressing letters, in taking seats, &c. &c. This is his position in the family so long as he is a junior in domestic rank. The son to be adopted must be such as to fall in naturally into his place when adopted. Thus, if he were the uncle (maternal or paternal), he would not be considered fit for adoption. For, his position towards the adopter would be changed unnaturally. But if there be a younger brother, he can be adopted by his elder brother. Because the elder brother is looked upon as a father.[1] Such adoptions are considered as quite proper by the community. They have been so from time immemorial. In Mr. Steele's time, such adoptions were an accepted institution just as they now are amongst the people.[2] Since Mr. Steele's time, however, our courts have sometimes had their attention called to Mr. Sutherland's synopsis, and the deductions

[1] The sentiment embodied in the following verse is still honored in all parts of the country: ज्येष्ठोभ्राता पितुः समः ॥ Translation:—The elder brother [is] equal to the father:—Adhyátma Rámáyaṇa, *Yuddha-Káṇḍa*, 2nd *Sarga*, v. 34, leaf 5, p. 2. See also the Mahábhárata, *Anuśasanika Parvan*, 105 *Adhyáya* v. 16, (l. 145, p. 1).

[2] Steele's Summary, 1st Ed., p. 51. From my own knowledge of the greater part of the Hindu community of this Presidency, and from enquiries made during a long time, I can confirm every word of what Mr. Nelson writes in the following paragraph in regard to Madras:—

"Judging from my own experience, I do not believe that the people at large, including our Brahmans, have any the slightest knowledge of the existence of the doctrine under notice: and on the other hand, I do believe that, as a general rule, those tribes and castes of the Madras Province who practise adoption at all, adopt indifferently whatever youthful persons can most conveniently be procured for the purpose. Only the other day a very respectable official, belonging to one of the leading Brahman class of the South India, told me that a member of his family had adopted a brother. And several persons who should know, have told me that a daughter's son is commonly, and a sister's son most commonly, taken in adoption."—*A View of the Hindu Law as administered by the High Court of Judicature at Madras*, by J. H. Nelson, M. A., 1877, p. 91.

founded thereon. Whether it was in consequence of these, or on account of some other objections which were started, is not quite clear. But in 1852, a gentleman in Poona was obliged to consult the leading Śástris of Mahárástra in that city on the subject, and from the reference[1] which he made to the Śástris, and their reply (which gives the

[1] The following is the reference letter and its reply :—

श्री

वेदशास्त्र संपन्न राजमान्य राजश्री पुणेकर शास्त्री मंडली यांस पोष्य नारायणराव रामचंद्र चौभे. वस्ती शहर पुणें पेंठ कसबा कृतानेक साष्टांग नमस्कार विनंति विशेष.

आमचे आजे बाळाजी सिद्धेश्वर हे (ह्यांनीं?) काशी बिन सोनकोंत चौभे यांणी (ऊर्फ?) काशी रघुनाथ चौभे हे सोनकोपंताचे ज्येष्ठ चिरंजीव, दादोपंताचे नातू हे चुलतपुतण्ये, यांचा ज्येष्ठ चिरंजीव यास मौंजीबंधन झाल्यावर दत्तविधान करून घेतलें, त्यास नांव रामचंद्र राव, त्याचें विवाहादिक नंतर झालें. ते शके १७७४ भाद्रपद वद्य १४ रोजीं मृत्यु पावले. त्यांणीं दत्तपुत्र घेण्याविषयीं आज्ञा दिल्याप्रमाणें त्यांची वडील स्त्री जानकीबाई भ्रतार रामचंद्र बल्लाळ यांणीं आश्विन वद्य ९ शनवार रोजीं काशीरघुनाथ चौभे यांचे कनिष्ठ चिरंजीव आह्मी नारायण यास दत्तक विधिपूर्वक घेतलें. त्यास रामचंद्रराव काशीरघुनाथ यांचे ज्येष्ठ चिरंजीव बाळाजी सिद्धेश्वर यांस दत्तक दिलें, तेव्हां रामचंद्र बल्लाळ व काशिरघुनाथ यांचें बंधूचें नातें जाहलें. हल्लीं आह्मास दत्तक घेतलें तेव्हां आह्मी जानकीबाईचे पुतण्ये होत आहों. पूर्वीचे घरचे रामचंद्रराव दत्तक झाल्यानंतर आमचा जन्म झाला, तेव्हां बंधुत्वाचें नातें मुळींच राहिलें नाहीं असा मजकूर. तेव्हां आह्मी रामचंद्र बल्लाळ यांचे वारस पुत्र शास्त्राप्रमाणें झालों, याकारणास्तव मेहेरबान जडज साहेब बाहादुर जिल्हा पुणें यांचें वारसाचें सरटिफिकिट मिळावें याबाबदींत जानकीबाई यांच्या कनिष्ठ सवती मथुराबाई व लक्ष्मीबाई आहेत, त्या दोघी यांणीं आह्माविषयीं कबुलातीचे अर्जी साहेबांस केले आहेत. त्यास पूर्वीचे घरचे बंधू अंते दत्तक पूर्वी व हल्लीं, नानासाहेब सचीव यांणीं वामनराव रावसाहेबांस दत्तक घेतलें होतें. आबासाहेब पुरंदरे यांणीं माधवराव नीलकंठ पुरंदरे यांस दत्तक घेतलें. ते हल्लीं असोन त्यांस सरकारांतून, जाहागिरी चालत आहे. व तात्यासाहेब चंद्रचूड यांची वडील स्त्री यशवदाबाई यांणीं यशवंतराव यास दत्तक घेतलें. त्या कामांत शास्त्राचा विचारही झाला आहे. त्यास असे दत्तक झाले असतां त्याजविषयीं शास्त्रांत विरुद्ध आहे किंवा कसें, व जो दत्तक झाला तो व तैं विधान फिरेल किंवा कसें, व दत्तकास स्थावर जंगम मिळकतीचा सर्व अधिकार पोंचतो किंवा कसा याविषयीं आपण शास्त्राविचार करून शास्त्रांतील वाक्यें सहित लिहून देऊन याखालीं आपली संमती करून दिली पाहिजे. कळावें मिती मार्गशीर्ष शुद्ध २ बुधवार शके १७७६ आनंदनामसंवत्सरे तारीख २ नोवेंबर सन १८५४ इसवी बहुत काय लिहिणें लोभ करावा ही विनंती.

सही नारायणराव रामचंद्र चौभे दस्तुरखुद.

उत्तर.

दत्त पुत्र घेणें तो सगोत्र सपिंड घ्यावा त्यांत भावाचा मुलगा घ्यावा हा मुख्य पक्ष आहे. त्याप्रमाणें हें दत्तविधान झालें. तो दत्त भावाचे मुलाप्रमाणेंच आहे. व पूर्व संबंधानें पाहतां कनिष्ठ भ्राता आहे. तोही पुत्रतुल्य आहे. यावरून पाहतां हें दत्तविधान शास्त्राप्रमाणें आलें आहे यास बाध नाहीं. यथाशास्त्र झालेलें दत्तविधान फिरणार नाहीं. जो दत्तपुत्र झाला तो, स्थावरजंगमाविषयीं मालक होईल.

अत्रप्रमाणं.

दत्तकपुत्रग्रहणे भ्रातृपुत्रः प्रथमः ॥ भ्रातॄणामेकजातानां यद्येकः पुत्रवान् भवेत् । सर्वे ते तेन पुत्रेण पुत्रिणो मनुरब्रवीदित्यादिवचनात् ॥ तदनन्तरं सगोत्रसपिण्डः ॥ ब्राह्मणानां सपिण्डेषु कर्तव्यः पुत्रसंग्रह इत्यादिवचनात् ॥ सगोत्रसपिण्डान्तर्गतः कनिष्ठभ्रातापि ग्रहणयोग्यः ज्येष्ठो भ्राता पितुः सम इत्यादिवचनेभ्यः कनिष्ठभ्रातुः पुत्रसमत्वात् भ्रातुः पुत्रवत् ॥ ज्येष्ठभ्राता तु पितृसमत्वात् ग्रहणयोग्यो न भवति ॥ कनिष्ठभ्रातुस्तु दत्तकत्वेन ग्रहणे मयूखमितिमाक्षरादिग्रन्थेषु बाधकं स्मृतिवचनं पुराणवचनं च नोक्तं ॥ किंच ॥ प्रकृतोदाहरणे ज्येष्ठभ्रातुः दत्तकत्वात् पूर्वभ्रातृसंबन्धस्य निवृत्तेः इदानीं भ्रातृपुत्रसमत्वात् इतरसपिण्ड-

authorities), it is clear that such adoptions were held proper by the community. The names of Śástris attached to the paper are all names of men of mark. But amongst them are several specially pre-eminent for their learning and qualifications throughout the whole country. The paper is also useful in that it gives the previous history of similar adoptions in several leading families of the Dekkan.

---

वत् पूर्वकनिष्ठभ्रातुर्दत्तकत्वेन ग्रहणं सुतरां घटते ॥ स च दत्तकः सकलस्थावरजङ्गमात्मकधनस्वामित्वं लभते ॥

अत्रार्थे संमतयः

१ त्र्यंबकशास्त्री शालिग्राम स्वाक्षर.
१ नीलकंठशास्त्री भट स्वाक्षर.
१ शंकर जोशी व्यवहारे स्वदस्तुर.
१ महादेवशास्त्री गडबोले स्वदस्तुर.
१ भिकुशास्त्री गोडबोले दस्तुरखुद.
१ जनार्दनाचार्य वळे दस्तुरखुद.
१ गोपीनाथशास्त्री आकाशे हस्ताक्षरखुद.
१ धोंडशास्त्री डेग्वेकर हस्ताक्षर खुद.
१ गणेशशास्त्री वाळवे दस्तुरखुद.
१ नरसिंहाचार्य ओक दस्तुरखुद.
१ नारायणशास्त्री अभ्यंकर दस्तुरखुद.
१ बाळशास्त्री देव टोकेकर दस्तुरखुद.
१ कृष्णशास्त्री राजवाडे दस्तुरखुद.
१ गोपाळाचार्य श्रीकरहाटकर दस्तुरखुद.

*Translation.*

Śrí.

Ex. No. 10.

To

The circle of Śástris in Poona, learned in the Vedas and Śástras, and revered by, and the ornament of, rulers.

The humble greetings of their protege Narayanarao Rámachandra Chobhe, inhabitant of city Poona, Peth and Kasba [the same], whose request is as follows:—

My [paternal] grandfather Balaji Siddheśvara adopted the eldest son of his father's brother's grandcon Káśí Bin Sonakopant Chobhe, otherwise called Káśí Raghunátha Chobhe, [who was himself] the grandson of Dádopant, after the *upanayana* [of the said son was performed]. The name of that [adopted son] was Rámachandrarao. His marriage and the rest of the ceremonies took place subsequently. He died on the fourteenth lunar-day of the dark fortnight of Bhádrapada Śake 1774. In accordance with the injunction for adoption left by him, Jánakíbáí, the senior widow of [the said] Rámachandra Ballála, after [performing] due ceremonies adopted me, who was the youngest son of Káśí Raghunátha Chobhe, on Saturday the ninth lunar day of the dark fortnight of Aśvina [*Śake* 1774]. Now Rámachandrarao, [originally] the eldest son of Káśí Raghunátha, became, on being adopted by Bálájí Siddheśvara, his [*i. e.* Káśí's] *Bandhu*, [one of the rank of a brother, *i. e.* a father's cousin's son in the present instance]. At the time when I was adopted, I was [related] to Jánakíbáí as her nephew. I was born after Rámachandrarao was adopted out of his natural family; so that there was no relationship of brothers [between us]. This being the case, I became the son and heir of Rámachandra Ballála according to *śástras*; and accordingly in the proceedings now before the Meherban Judge of Zilla Poona, about the certificate of heirship, Mathurábáí and Lakshimibáí, the junior co-widows of Jánakíbáí, have presented applications acknowledging me [as heir]. The past and present instances of the adoption [as *son*] of a brother in the original family [of birth] are:—[1] Nánásaheb Sachiva adopted Vámanarao Raosaheb, [2] Ábásaheb Purandare adopted

Mádhavarao Nílakaṇṭha Purandare, who is still alive, and enjoying a Jahagira from Government, [3] Yaśodábái, senior widow of Tátyásaheb Chandrachuda, adopted Yaśavantarao, after consultation of the *śástras*. Now [the questions are] [1] if such adoptions have taken place, are they repugnant to the *śástras*? [2] Can the son [so] adopted and the adoption be null? [3] And whether the [said] adopted son is entitled to all the rights in the immoveable and moveable property [of the adopting father]? Do consider these [questions] according to *śástras*, and state your opinions [supported] by authorities from the *śástras*, and subscribed [by yourselves]. Be this known. Dated Wednesday the 2nd luuar day of the bright fortnight of Márgaśírsha Śake 1776 in the Samvatsara named Ananda [corresponding to] 2nd November 1854 A.C. What more need be written? Be kind. This is my request. 10

(Signed) NARAYANARAO RAMCHANDRA CHOBHE
in his own hand.

*Reply.*

The first recommendation [in the matter of adoption] is that the son to be adopted should be one of the same *gotra* and a sapiṇḍa, and [preferably] a brother's son. This [*i.e.* the one under consideration] adoption has taken place in accordance with this [precept]. The adopted son [here] is like a brother's son. Looking in reference to the original family, he is a junior brother, and [even as such] like a son. In this manner the present adoption has taken place according to the *śástras*, and is unobjectionable. An adoption effected in due conformity with the *śástras* cannot be annulled. The adopted son will be owner of the immoveable as well as moveable property. 20

Authorities for this [these are given in Sanskrit]. In respect of the adoption of a son, a brother's son is the first [in eligibility] in accordance with texts like [the following] :—'Of brothers born of the same [parents], if one should get a son, all these brothers become, by means of that son, fathers of a son. So said Manu.' After him, one of the same *Gotra* and a *sapiṇḍa* [is eligible] in accordance with the text, 'Brahmaṇas should adopt a son from among the *sapiṇḍas*.' Now, a junior brother who is included in [the class of] *sagotra sapiṇḍas* (those of the same *gotra* and *sapiṇḍas*) is fit for adoption; because a junior brother is like a son as much as a brother's son is, in accordance with texts like 'the eldest brother is like the father.' On the other hand, the eldest brother being like the father is not fit for adoption [by the junior brother]. Besides, no text either from Smṛitis or Puráṇas that is opposed to the adoption of a junior brother is cited in works like the Mayúkha and the Mitákshará. Furthermore, the eldest brother being himself an adopted son in the present instance, his junior brother in the original family [*i.e.* the querist] is like a brother's son, now [*i.e.* since the adoption of the eldest brother] his original relationship of a brother having ceased. Acceptance of him therefore as an adopted son is decidedly allowable. This adopted son obtains [in virtue of his adoption] the ownership of the whole wealth [immoveable and moveable.] 30 40

[Signatures indicating] assent in this matter.

1 Tryambaka Śástri Śáligráma, in his own hand.
1 Nílakaṇṭha Śástri Bhata, his own hand.
1 Śaṅkara Jośí Vyavaháre, his own hand.
1 Mahádeva Śástri Godabole, his own hand.
1 Bhiku Śástri Godabole, his own hand.
1 Janárdanácharya Vale, his own hand.
1 Gopínatha Śástri Ákáśe, his own hand.
1 Dhond Śástri Dogvekar, his own hand.
1 Ganesha Śástri Vaḷane, his own hand. 50

In like manner, is the adoption of a sister's son common amongst the Hindus in this Presidency, amongst all castes and classes. Still more common is the adoption of a *dauhitra* (daughter's son). These adoptions are perfectly in consonance with the immemorial customs and usages of the people; and it is only within a few years that doubts have been thrown upon them in cases which I shall notice hereafter. So far as regards the doubts and questions that have been raised about the validity of these and other adoptions on the ground of relationship, I must say that all the restrictions which are now being worked out, are unknown to the Hindu law and the native community in these parts. To use the words of Mr. Justice Innes in a recent judgment, while "the consciousness of the people and the practice of every-day life," all tend to support such adoptions, some English writers, and also some recent judgments would make them invalid by wrong analogies and unwarranted generalizations founded on imperfect translations.

To make this clear, I will pass in review all that has been said on the subject by the writers just referred to. Mr. Sutherland, in the year 1821, laid down in his synopsis a rule on this subject to the following effect:—

"The first and fundamental principle is that the person to be adopted be one who by a legal marriage with his mother might have been the legitimate son of the adopter."[1]

Sir Francis W. Macnaughten in 1824, writing in reference to Bengal, speaks as follows:—

"As to the three superior classes, the rule is that they cannot adopt a son whom it would be incest to have begotten, and conversely that they may adopt a son if without incest they could have begotten him."[2]

Sir Thomas Strange in 1825 adopts the proposition as laid down by Mr. Sutherland, and says:—

"One with whose mother the adopter could not have legally married must not be adopted; and the exclusion seems to hold applying the principle to the sex where the adoption is by a female."[3]

Mr. W. H. Macnaughten in 1829 observes:—

"The party adopted should not be the son of one whom the adopter could not have married, such as his sister's son or daughter's son."[4]

---

1 Narsimhácharya Auka, his own hand.
1 Narayana Śástri Abhyankara, his own hand.
1 Bála Śástri Deva Tokekara, his own hand.
1 Krishna Śástri Rájaváde, his own hand.
1 Gopálácharya Śrí Karatakara, his own hand.

[1] See Stokes' Hindu Law Books, p. 664.

[2] Considerations on Hindu Law as is current in Bengal, by Sir F. W. Macnaughten, 1824, p. 150.

[3] Elements of Hindu Law, vol. I. p. 83.

[4] W. H. Macnaughten's Principles and Precedents of Hindu Law, vol. I., p. 67.

Mr. Justice Strange in 1863 says :—

"(84.) According to an original text, the child to be adopted should be such as may be looked upon as 'the reflection of a son.' This is held to mean 'the resemblance of a son,' or such a one as the adopter might have legally begotten (Dattaka Mímámsá of Nanda Pandita, v. 16); that is one whose mother he might have legally married (I. 83; Sutherland 223)"; "(85) Pursuant to this rule a brother, a paternal or maternal uncle, or a daughter's or sister's son, could not be adopted (I. 83)."[1]

Mr. Grady in 1868 merely reproduces Mr. Sutherland and Sir T. Strange.[2]

Mr. J. D. Mayne[3] in 1878, while adopting the abovementioned rule, notices with disapproval the introduction of another fiction that the adopting mother should be such as could have been married by the natural father of the adopted.[4] If the original works to which I have referred in this section had been accessible to Mr. Mayne, he would, I feel sure, have demolished the fictions founded on the supposed relationship between the natural and adopting parents of the adopted much better than I have done.

It thus appears that the above proposition about relationship was first started by Mr. Sutherland apparently without any enquiry into the original sources of the law, or the customs of the people, and it was adopted by all the English writers who followed him, except Mr. J. H. Nelson, Judge of Madura, who seems to stand alone in marking the mischief caused in practice by the adoption of the said rule.[5] Mr. Nelson has successfully exploded the doctrine by showing that if it was at all supported by Sanskrit works, those works were never accepted as works of authority in Madras, "and have not served in an "appreciable degree to guide public opinion as to what ought to be "done and what ought not to be done in the matter of adoption."[6]

While affirming in respect of this Presidency every word of what he has said in reference to the Madras Presidency, I go further, and hold that the doctrine he speaks of in the above extract is entirely unsupported by authority, and is contradicted by the immemorial custom of the people of this Presidency. The authorities relied on by Mr. Sutherland[7] in support of the above proposition are the Dattaka Mímámsá, sec. V., para. 16, *et seq.* and the Dattaka Chandriká, sec. II. para. 8.

These two passages are comments of Nanda Pandita and Kubera respectively on the words पुत्रच्छायावहं (bearing the resemblance of a son)

[1] See Mr. Justice Strange's Manual of Hindu Law p. 22, 2nd edition.
[2] A Treatise on the Hindu Law of Inheritance, by S. G. Grady, Esq., 1868, pp. 66, 67.
[3] Mayne's Hindu Law and Usage, p. 109, Section 118.
[4] Id. Section 120, p. 111.
[5] See his View of the Hindu Law as administered in Madras, pp. 90—95.
[6] Id. p. 90.
[7] See Stokes' H. L. B., p. 664.

occurring in the text of Śaunaka cited in the Mayúkha.[1] The original passage in the Dattaka Chandriká commenting on the above, runs as follows[2]:—पुत्रच्छाया पुत्रसादृश्यं नियोगादिना स्वयमुत्पादनयोग्यत्वमिति यावत्. Translation :—*Putra-chháyá* (son's resemblance or reflection) means the resemblance of the son, or the fitness to be produced by self through *niyoga*, &c.

The Dattaka Mímámsá on the subject commences by saying—पुत्रच्छाया पुत्रसादृश्यं तच्च नियोगादिना स्वयमुत्पादनयोग्यत्वम्. (Translation :—*Putra-chháyá* (son's resemblance or reflection) means resemblance to the son, that is the fitness to be produced by self through *niyoga*, &c.) and dilates on this by introducing the idea of विरुद्ध सम्बन्ध (contrary relation).[3]

Speaking briefly, I may say, first, that the above passages are inapplicable to the present age; that they are opposed to the general principles of the law, especially that concerning marriages and adoptions; that there is no ancient authority, legal or historical, for construing *Putra-chháyá-vaham* (bearing the resemblance of a son) in Śaunaka's text in the manner in which Nanda Paṇḍita and Kubera have done in the above passages; and that there is no other *Nibandha* writer of note consulted on this side of India or anywhere in the south, supporting this interpretation; secondly, that this construction is opposed to Smṛiti texts; to the distinct views of Nílakaṇṭha and Śaṅkarabhaṭṭa and others, and to the known, recorded, and prevailing usages and customs of the people. But reading these passages as they stand, I cannot help remarking that, even assuming for a moment the correctness of the above comments, Mr. Sutherland's rule in the synopsis goes far beyond what he cites as his authorities. He seems to have confounded *Niyoga* with what he calls "legal marriage."[4] I may observe, any marriage must be legal according to the *Dharmaśástra*, otherwise it cannot be a marriage; so that the addition of the word *legal* seems superfluous. But leaving that aside, *Niyoga* is not a marriage at all of any kind whatever; and further, *Niyoga* presupposes at the least a former betrothal of the woman with whom the said *Niyoga* is presupposed. *Niyoga*, strictly speaking, means the raising up of issue on the widow of a deceased by some one on appointment. As a practice, it has been reprobated by Manu.[5] At no time in India's history was *Niyoga* ever exalted to the rank of marriage[6]; and it is now a mere fossilized relic of the past.

[1] See Part I. p. 40 line 11 and its translation, Part II. p. 52 ll. 32, 33.

[2] See p. 52 ll. 2, 4, *Chháyá* literally means shade; and may be translated into resemblance or reflection.

[3] See p. 26 ll. 6—20.

[4] Stokes' H. L. B., p. 664.

[5] Chap. ix., v. 68; vv. 57 to 70 of this chapter give the history of the *Niyoga* practice which is condemned as fit only for cattle, and as unauthorized by the Vedic texts regarding marriage. See further Kullúka's Comments, l. 158, p. 2, and l. 159, p. 1.

[6] See Mitákshará chap. ii., l. 54. p. 2 l. 13, and its translation by Colebrooke chap. i. sec. 10, para. 12.

Marriage is one of the principal Samskáras amongst the Hindus; whereas *Niyoga* is neither a Samskára nor even a mere inferior popular observance sanctioned by custom. At the best, it was according to Manu a beastly practice, reprobated by the learned, and expressly prohibited in the Kali age.[1] How Mr. Sutherland should have made the mistake of confusing *Niyoga* with "legal"[2] marriage is to me inexplicable. One explanation that suggests itself is that in the printed original of paragraph 20 at page 591, the words यत: रतियोग: सम्भवति[3] (with whom sexual connection is possible) are incorrect; they should be यन्मातरि नियोग: संभवति[4] (with whose mother *Niyoga* is possible). Mr. Sutherland's para. 20, wherein the incorrect reading has been admitted, may have naturally led to the mistake of inferring marriage where *Niyoga* was intended.

After this brief digression to the synopsis of Mr. Sutherland, I now return to Kubera and Nanda Pandita, and proceed to show that both Kubera and Nanda Pandita are wrong in introducing the idea of a *Niyoga* into the question of adoption. They give no reasons to support their interpretation of the terms *Putrachchháyá vaham*, nor do they cite any customs.

They may probably have been led to suggest the idea by the fact that a brother's son is recommended as the first among those eligible for adoption, and that a brother's widow happens to be mentioned as one, on whom, if childless, a son could at one time prior to Manu be produced. This, however, would be a very superficial view of the matter, and both the authors seem to have forgotten that *Niyoga*, if it was ever established as a legal institution by the community generally, had been distinctly prohibited in this Kali age.[5] Vijñáneśvara has shown that the only case in which *Niyoga* was considered allowable in any age, is that of a maiden merely betrothed. Whatever was the practice on this subject in very early times, Vijñáneśvara's statement appears to be correct at any rate so far as the period dating from the promulgation of Manu's code is concerned.[6]

[1] Nirnayasindhu 3rd *Parichchheda* 1st half, leaves 62—64; Dharmasindhu, 3rd Parichchheda, 1st half, leaf 118, p. 2.

[2] See Stokes' H. L. B., p. 664.

[3] Dattaka Mímámsá, p. 26, ll. 19, 20.

[4] These words occur in an excellent old MS. consulted by me; and they are also necessitated by the context.

[5] See Nirnayasindhu *Pari.* iii. 1st half, l. 62, pp. 1—2.

[6] See Mit. ch. ii. leaf 54, pp. 1—2, and its translation by Mr. Colebrooke, ch. i. sec. 10. See particularly paragraph 8. Stokes' H. L. B., pp. 407—408.

See also Mádhava, who says that गुर्वादिनियोगोपि वाग्दत्ताविषय एव अन्यस्य नियोगस्य मनुना निषिद्धत्वात् ॥ Translation:—The *Niyoga* [to be directed] by the *Guru* (the preceptor and other (elders) refers to the *Vágdattá* (given by speech) alone, because of Manu's condemnation of any other *Niyoga*.

Again, both Kubera and Nanda Paṇḍita apply the expression "fitness to be produced by self through *Niyoga*" to all classes generally, for they cannot limit it, and have not limited it to the *dvijas* (twice-born). Such being the case, they have not explained how they reconcile their recommending the sister's son and the daughter's son, as the most proper for Śúdras; for even in the most degraded times no Áryan writer has even permitted *Niyoga* to a Śúdra with his own daughter or sister.

Further, the theory of *Niyoga* as propounded by Nanda Paṇḍita and Kubera seems to be inconsistent with other portions of their own work; for it excludes cases of eligible adoptees to which they could have apparently no objection. Thus the verse[1] of Manu which speaks of *Niyoga* says that it can be directed to a brother or a *Sapiṇḍa* relation alone. Yájñavalkya (chap. II., v. 128) says that that appointment may be made of a *sagotra* (one of the same *gotra*) or of some other person. Vijñáneśvara, however, has so interpreted this apparently very general statement of Yájñavalkya as to exclude all but the husband's brother or his *Sapiṇḍa*. Thus taking Manu and Yájñavalkya together, it is clear that *Niyoga* cannot take place except in reference to the widow of a brother, a *Sapiṇḍa*, or a *Sagotra*. If, therefore, *Niyoga*, as it once existed, is to be assumed as the test of selection, then it follows that the son of one who is neither a *Sapiṇḍa* nor a *Sagotra* of the adopter should never be allowed to be taken in adoption. And yet Nanda Paṇḍita himself, citing a text[2] of Śákala, declares that he is so eligible for adoption. Nanda Paṇḍita tries to get over these difficulties by saying—न चासम्बन्धिनि नियोगासम्भवः। बीजार्थं ब्राह्मणः कश्चिद्धनेनोपनिमन्त्र्यतामिति स्मरणेन निमन्त्रणसम्भवात् Translation:—"Nor is such appointment of one unconnected impossible; for the invitation [of such persons to raise issue] may take place under this text: 'for the sake of seed, let some Bráhmaṇa be invited by wealth.'"[3] This answer of Nanda Paṇḍita, however, is only partial; for it may meet the said objection only in the case of the adoption of a Bráhmaṇa. The text cited by him authorizes the appointment of a Bráhmaṇa *alone*, when he is in no way related, and that impliedly, for all classes. No authority having been cited by Nanda Paṇḍita to shew that any one of the three remaining classes, who is not a husband's brother, a *Sapiṇḍa* or a *Sagotra* of the adoptee's mother, may ever be appointed to raise issue, it must follow that there can never be an adoption of a boy who is neither a *Sapiṇḍa* nor a *Sagotra* in the case of the other classes; whereas no such restriction is laid down in the above text of Śákala

[1] See ch. ix. v. 59.

[2] See Datt. Mím. p. 8, ll. 18—20 and its translation, Stokes' H. L. B. p. 549 ll. 32—36.

[3] See Dat. Mím. p. 26 ll. 8, 9 and its translation, Stokes' H. L. B. p. 520 ll. 11—14.

cited by Nanda Pandita, and adoptions of *asagotra* boys take place every day amongst all classes.

Again, a *niyoga* is possible only in the case of a childless widow (see Manu ch. IX. vv. 69, 70), and that until one son is produced. Thus where a female has one son already, she can under no circumstances have another son begotten on her by means of *Niyoga*. This being the case, any son other than the first would be ineligible under Nanda Pandita's dictum as not being producible by *Niyoga*. Similarly, the son of a living brother would be ineligible, for no *Niyoga* would be possible with a brother's wife during the lifetime of the brother. The above remarks will, I believe, show that the test of producibility through *Niyoga* is a mere crude speculation founded on no authority, utterly inapplicable to the present age, and inconsistent with the law of adoption laid down by the said two writers and by all received authorities on the subject.

In the next place, the above theory is opposed to received texts, and is not supported by digests accepted in this Presidency. The Sarasvativilása[1] quotes a text of Yama which runs as follows :—

दौहित्रे भ्रातृपुत्रेच होमादिनियमो न हि । वाग्दानादेव सिद्धिः स्यादित्याह भगवान्यमः ॥

Translation :—In the case of a daughter's son and a brother's son, the rule with regard to a sacrifice and the like does not prevail. [The act of adoption] is complete by a verbal gift alone. So says the holy Yama.

I find this verse quoted in the Dattaka Darpana of Dvaipáyana, who is a writer later than Anantadeva, the author of Samskárakaustubha, with the preamble, उक्तं च सरस्वतीविलासे (it is said in the Sarasvatívilása). Later on still, I find this text has been adopted by the Śástrís of the Bombay Suddur Diwani Adálat in *Huebutrao Mankur* v. *Govindrao Bulwant Mankur* (II. Borradaile's Report p. 87).[2] The above text distinctly sanctions the adoption of a daughter's son, which is inconsistent with the rule laid down by Kubera and Nanda Pandita, *Niyoga* being impossible between a father and his daughter under any circumstances whatsoever.

I have thus far addressed myself to the common ground between Kubera and Nanda Pandita in respect of their theory of *Niyoga*. I shall next consider how far the attempt of Nanda Pandita alone to fortify this theory by analogy from marriage is successful. It is in this connection that he introduces the idea of *Viruddha Sambandha* (contrary relationship), and says that it (*Viruddha Sambandha*) is to be avoided in adoptions as it is in marriage. He defines *Viruddha Sambandha* in connection with adoption to be नियोगादिना स्वयमुत्पादनायोग्यत्वम्.[3] Translation : 'Unfitness to be produced by self through *Niyoga*, &c.'[4]

[1] Dr. Burnell considers this work to have been written about 1320 A. C. See his translation of Varadarája's Vyavahára Nirnaya, preface p. 1.

[2] See Steele, p. 52. Instances of such adoptions without a *homa* (sacrifice) are known to have taken place at Benares and other centres of Hindu society.

[3] Page 26, l. 13. [4] See the Grihya Parisishta of Áśvaláyana, Cal. Ed. p. 284.

This proposition is incorrect for many reasons: (1.) There is no text prohibiting adoption on account of *Viruddha Sambandha* as there is in the case of marriage. (2.) Secondly, there can be no justification in applying by analogy a text concerning marriage to the subject of adoption; for there is no analogy between the two cases. Marriage is a Samskára, whereas adoption is not. *Sapiṇḍa* relationship and sameness of *gotra*, which are particularly prohibited between the bride and the bridegroom in the case of marriage, are as particularly recommended as between the adopter and adoptee in the case of adoption.[1] (3.) The analogy which is assumed by Nanda Pandita to exist is further stretched by him by giving to the words *viruddha sambandha* in adoption a sense more extended than the one it bears in the said *Grihya Pariśishṭa* text on marriage.[2] Áśvaláyana's text on marriage prohibiting *viruddha sambandha* runs thus :—लक्षण्यो वरो लक्षणवतीं कन्यां यवीयसीमसपिण्डामसगोत्रजामविरुद्धसम्बन्धामुपयच्छेत्. Translation :—The bridegroom duly qualified should marry a duly qualified maiden who is younger in years, is not a *sapiṇḍa*, is not of the same *gotra*, and whose marriage does not involve a *viruddha sambandha* (contrary relationship).

A few lines further on Áśvaláyana defines *viruddha sambandha*, and illustrates it by examples as follows :—दम्पत्योर्मिथः पितृमातृसाम्यविरुद्धः सम्बन्धः। यथा भार्यास्वसुर्दुहिता पितृव्यपत्न्याः स्वसा। Translation :—[*Viruddha sambandha*] is that *sambandha* (relation) which is *viruddha* (contrary or improper) owing to the relationship [existing] between the bride and the bridegroom [before their marriage] being similar to that of a father or mother. As for instance the daughter of the wife's sister [and] the sister of the paternal uncle's wife.

Thus there are here three prohibitions laid down, the violation of which invalidates marriage, viz. *Sapiṇḍa* relationship, and *Sagotra*-ship, and *Viruddha Sambandha* (contrary relationship). Now Nanda Pandita says that a sister's son would be excluded from adoption on the score of his *Viruddha Sambandha*[3]; whereas a sister is declared ineligible for marriage not on the ground of *Viruddha Sambandha*, but on that of *sapiṇḍa* relationship.[4] The *Viruddha Sambandha* of Nanda Pandita would thus include the *sapiṇḍa* relationship. But Áśvaláyana in

[1] I find this absence of analogy between marriage and adoption remarked by Dvaipáyana in his Dattaka Darpaṇa, though in reference to another branch of the subject of adoption, viz. the performance of sacrifice and similar rites. In answer to an objector who maintains the necessity of a sacrifice in adoption on the analogy of marriage, Dvaipáyana says :—सपिण्डसगोत्रे निषिध्यमानस्य कन्यादानस्य सपिण्डसगोत्रे विधीयमानस्य पुत्रदानस्य त्वदुपन्यस्तो ऽतितरां विषमो दृष्टान्तः Translation :—Your illustrating the gift of a son which is particularly enjoined [to be made] to one who is a *sagotra* (of the same *gotra*) and a *Sapiṇḍa*, by the example of the gift of a daughter which is prohibited [from being made] to a *sagotra* and a *Sapiṇḍa* is extremely improper.

[2] Calcutta Ed. p. 284.

[3] Dattaka Mímámsá, p. 26, l. 12, and translation Stokes' H. L. B. p. 590, ll. 22—24.

[4] Samskárakaustubha, l. 178 p. 2 to l. 179 p. 1; see above pp. 349—350.

his Gṛihya Pariśishṭa mentions *viruddha sambandha* as a disqualification for marriage side by side with a *Sagotra*-ship and *Sapiṇḍa* relationship; so that he has evidently given it a limited sense which is also clear from the examples of wife's sister's daughter and the paternal uncle's sister, which he has adduced to explain the meaning of that term, but of which Nanda Paṇḍita in his natural desire to support his theory of *Niyoga* as far as possible has evidently lost sight.

I must observe that if it be deemed necessary to introduce into this subject the idea of *Viruddha Sambandha* (improper relationship), which is clearly an idea contrary to authority and immemorial usage, it appears to me that that *Viruddha Sambandha* (contrary relationship) must be understood as existing between the parties to the act in reference to which it is said to be prohibited. Thus if in marriage, it is between the bride and the bridegroom, in adoption it must be taken as between the adopted and the adopter. If marriage between a man and his wife's sister's daughter is prohibited, because the former stands to the latter in relationship analogous to that of a father, (they being the parties concerned with the act of marriage), it stands to reason that any bar to adoption that can arise out of contrary relationship ought to arise out of that relationship as between the adopter and the adoptee, and not between the adopter and a third party who is not essentially concerned with the ceremony. In this view of the matter, the prohibition of a *Viruddha Sambandha* will not amount to anything more than the general rule of Manu that the son to be adopted should be *sadṛiśa* (similar), or that of Śaunaka, that he should be पुत्रच्छायावह (bearing the resemblance of a son). It must also be remarked that there is not a single word of *Viruddha Sambandha* in such general works as the Mitákshará, the Mayúkha, and Nirṇaya-sindhu, and Kṛishṇa Bhaṭṭí, and special treatises on the subject of adoption that I have consulted, viz. Dattaka Nirnaya, Dattaka Mañjarí, Dattaka Darpaṇa, Laugákshi Bháskara, and lastly the Dattaka Chandriká. The Dattaka Mímámsá of Nanda Paṇḍita and the Samskárakaustubha of Anantadeva alone mention *Viruddha Sambandha* (contrary relationship), as something to be avoided in adoption; but they do not use that expression in the same sense. The Samskárakaustubha uses it, as it appears to me, in the sense I have above suggested, and certainly not in the sense in which Nanda Paṇḍita uses it. I say so because Anantadeva mentions it only in one place,[1] and there adduces as examples the cases of a brother [evidently an elder], and paternal and maternal uncles, stating distinctly that the *Viruddha Sambandha* in their adoption consists in their being पुत्रत्वबुद्ध्यनर्ह (unfit to be regarded as sons). His words are as follows :—विरुद्धसम्बन्धापत्त्या पुत्रत्वबुद्ध्यनर्हभ्रातृपितृव्यमातुलवर्जम्.

[1] See Samskárakaustubha, l. 41, p. 2, l. 11.

Translation :—[All can be adopted] except a brother, a father's brother, and a mother's brother [whose adoption] involves *Viruddha Sambandha* (improper relationship) by reason of their being unfit to be regarded with the idea of sonship.[1]

It may be said that in shewing the incorrectness of the *Niyoga* theory, I have not demonstrated the incorrectness of the entire passages of Nanda Pandita and Kubera, regarding the expression *putrachchháyá vaham*; for they use the words *niyogádina* (producibility of the adopted by means of *niyoga* and *the like*). My reply is that vague words like *ádi* (and the like), can represent a class of objects similar to the one mentioned immediately before. And if *niyoga*, which the said writers make the principal representative of that class, fails as a test of selection, all those that are like it must necessarily fail. The said authors seem to have been aware of the difficulties that would have arisen if they had put *marriage* instead of *niyoga*, and therefore chose a test which they thought was less open to attack.

The next restriction is one directed to two sons, whom nature point to as the best for adoption, and who in pursuance of time-honored usage recognized by eminent authorities are usually selected for adoption as the best amongst *Asagotras* by people south of the Narmadá. They are the daughter's son and the sister's son.

Their alleged prohibition is based on the same footing in regard to both and on two grounds :—the dictum of Mr. Sutherland; and two Smriti texts. Most of the European writers on Hindu law found their objection on the first ground, and the only native author who lends some support to them is Nánda Pandita.

Briefly stated, the result of my investigations on the subject amounts to this, that neither on any general principle of law nor on texts, nor on custom, is there any the least ground for supporting the alleged prohibition, at any rate so far as the whole of Western India is concerned. With a view to make this clear I shall first summarize all that has been said on this subject by several European writers. Mr. Sutherland in his Synopsis places the above prohibition on the basis of his general rule, and says :—

"By the operation of this rule, a sister's son and offspring of other female, whom the adopter could not have espoused, and one of a different class, are excluded from adoption. In the present age, marriage with one unequal in class is prohibited."[2]

Sir Francis Macnaughten has laid down certain rules in his work; and of these Rule XII. runs thus :—

---

[1] See Observations of Yájñeśvara Śástrí to the same effect in his Putra Kalpalatá p. 38 para. 34.

[2] Stokes' H. L. B., p. 664, ll. 38—42.

"The son of a sister or of a daughter may be adopted by a Súdra. As to the three superior classes, the rule is, that they cannot adopt a son whom it would be incest to have begotten, and conversely, that they may adopt a son if without incest they could have begotten him."[1]

His quotation of Śaunaka in the succeeding paragraph is indefinite and inaccurate; for there is no text of Śaunaka supporting *Govardhan*, who is no known authority in Dharmaśástra, and has not been noticed by our standard writers. The whole paragraph appears to me to be a mixture of the *Niyoga* theory, with half a verse of Śaunaka, and a vague allusion to *Viruddha Sambandha* (contrary relation).

Sir T. Strange, though primarily basing the restriction on prohibited connection, cites Dattaka Mímámsá sec. ii., para. 30, and the note thereon, sec. ii., para. 32 and note, and para. 102, and sec. v. para. 18.[2] Further on in his Appendix to chapter iv. he cites the elder Gautama as found by him in the Dattaka Kaustubha and the Dattaka Mímámsá of Śrí Ráma.[3] He however testifies to the said prohibition being set aside in practice by persons of all castes in respect of a sister's son.[4] Mr. A. Steele, instead of noting any such prohibition, declares the daughter's or sister's son to be adoptible in the absence of a *Sagotra*. This statement is based on the authority of the opinion supplied by the Poona college.[5] A contrary opinion of some Poona Sástrís is also there noted.[6] But he does not seem to have attached any weight thereto, for at p. 52 he notes the absence of necessity in regard to the sacrifice in adoptions of a daughter's son, a brother's son, or a younger brother. Mr. W. H. Macnaughten, after laying down the rule that the adoptee "should not be the son of one whom the adopter could not have married," cites the sister's son and the daughter's son as instances thereof. He strangely adds that 'this last rule, however, applies only to the three superior classes, and does not extend to Śúdrás,' relying for his authority on Nárada as cited in the Dattaka Nirṇaya.[7]

[1] See his Considerations on the Hindu Law as is current in Bengal, p. 150. In support of this rule Sir Francis has cited Śaunaka, but not accurately. For, the restriction as to sameness of class in respect of adoption, which he confines to three higher classes, is declared by Śaunaka to apply to the fourth class as well. Again, there is nothing in Śaunaka's text to support even inferentially the prohibition in regard to adopting the eldest son, or about prohibitions dictated by '*common sense*' as in the cases "of a *brother*, a *paternal* uncle or a *maternal* uncle." Probably his Pandit Govardhan knew little beyond the Gauḍa usages.

[2] Vol. I., p. 83 and notes 5 and 6.

[3] Vol. II., pp. 100, 101.

[4] Vol. II., p. 101.

[5] His Summary of the Law and Custom of Hindu Castes in the Dekkan Provinces of the Bombay Presidency, p. 51, ll. 5—7, 1st ed.

[6] Id. Note 1.

[7] See his Principles and Precedents of Hindu Law, vol. I. p. 67 and last note.

Mr. Justice Strange bases the prohibition on the rule laid down by him in para. 84, but also notes that that prohibition is disregarded by all classes.[1]

Mr. Grady offers nothing new on the subject, but marks the inconsistency of Nanda Pandita in first saying generally that adoption can only be made of one with whose mother the adopter might have legally intermarried, and in stating afterwards that a Śúdra could adopt his daughter's or sister's son.[2]

Mr. Mayne too lays down the prohibition to be absolute for the three higher classes, as instances of a general rule about prohibited connection, although he notes its supersession in the Panjaub, towns like Delhi, Southern India and Western India.[3] If Mr. Mayne reads the originals, and goes to the root of the matter, he will find that the fanciful restrictions are due to Nanda Pandita and his translator's synopsis, and it is now being attempted to father them on the whole of India. In the Dekkan they are not known, and notwithstanding some recent judgments of our High Court, our religious life and convictions must with due deference remain the same.

From the preceding remarks it will appear that the alleged prohibition of a daughter's or a sister's son rests, firstly, on the dictum enunciated by Mr. Sutherland, to the effect that the adoptee's mother should be marriageable with the adopter, and secondly, on the authority of two texts cited by Nanda Pandita and Kubera in their Dattaka Mímámsá and Dattaka Chandriká respectively.

So far as the first mentioned ground of the prohibition is concerned, I have already shown above[4] that the said dictum of Mr. Sutherland is entirely groundless. I shall, therefore, now address myself to the question as to how far it is supported by the authority of texts. This investigation may, to some, appear unnecessary; because usage of adopting a daughter's or a sister's son has so long and so generally prevailed on this side of India with the complete approbation of the community, that no obsolete texts now revived and interpreted according to Nanda Pandita in the matter of adoption, ought to be permitted to change, nor will they change the daily lives and the social and religious customs of the people. Nanda Pandita lived more than 260 years ago, and not one ceremony or practice is regulated by the Dekkanis according to his doctrines to this day. I however enter into this investigation now, because I believe some recent cases have a tendency to unsettle the people's minds, and promote unnecessary litigation. To return to the argument: out of the works consulted, the Dattaka

[1] Mr. Justice Strange's Manual of Hindu Law, 2nd. ed. p. 22 paras. 85 to 89.
[2] See Treatise on the Hindu Law of Inheritance by S. G. Grady, p. 89.
[3] Mayne on Hindu Law and Usage, pp. 109, 110, paragraphs 118, 119.
[4] See pp. 478—486.

Chandriká, the Dattaka Mímámsá, the Samskárakaustubha, the Dharmasindhu and the Dattaka Nirṇaya contain this prohibition. In all of these the prohibition is placed on a par with the prohibition as to the giving of the eldest son, and the rule laying down the order of the eligible adoptees, both of which have been on all hands admitted to be directory.[1]

The Dattaka Chandriká grounds the prohibition on a text of Śaunaka.[2] The Dattaka Mímámsá bases it on the aforementioned text of Śaunaka[3] (the latter half of which it also ascribes to Vṛiddha Gautama),[4] and another of Śákala.[5] The Samskárakaustubha relies on the aforementioned text of Śaunaka,[6] and the Dharmasindhu cites the same text without referring it to any author.[7] The Dattaka Nirṇaya attributes the same verse to Nárada; and I find it cited by Krishṇabhaṭṭa, who has ascribed it to Vṛiddha Gautama.

Thus the above five digest writers base their objections to the daughter's son and the sister's son on two texts, one attributed variously to Śaunaka, Vṛiddha Gautama, and Nárada, and the other to Śákala. My contention is first that these texts are of doubtful authenticity; secondly, that even if they be genuine, they have been wrongly interpreted; and thirdly, even assuming the interpretation of the said digest writers to be correct, it leaves other texts and digests unexplained, and is further opposed to the usage of the country conformable to other texts, and existing for centuries. The first text runs as follows:— दौहित्रो भागिनेयश्च शूद्रैस्तु क्रियते सुतः । ब्राह्मणादित्रये नास्ति भागिनेयः सुतः क्वचित् ॥ This verse, although found in the manuscript copy of Śaunaka Kárikás in my library, does not occur in that copy of Kárikás which was available to Dr. Bühler.[8] Nor does it occur in the extract of the adoption chapter of the Kárikás made in the Samskárakaustubha,[9] and in the

[1] *Srimati Uma Devi* v. *Gokoolanand Dass Mahapara*, Law Rep. Ind. App., vol. V. p. 40. *Janokee Debea* v. *Gopaul Achajee and another*, 2, Ind. L. R. (Cal. Ser. 365.)

[2] See Dat. Chan. p. 49, ll. 7—12 and its translation; Stokes' H. L. B. p. 632, ll. 15 to 26 (sec. I. para. 17). It is worthy of note that the initial quarter of the prohibiting verse quoted by the Dat. Chan. at ll. 7 and 8 does not correspond with Śaunaka's text subsequently cited at l. 11. The first reference therefore cannot be from Śaunaka.

[3] P. 15, l. 19, and its comments, p. 17, l. 3 to p. 18, l. 11; and translation, Stokes' H. L. B. p. 564, ll. 3—5, and p. 567, l. 19, to p. 570, l. 25 (sec. II., para. 74, and paras. 91 to 106, respectively).

[4] P. 10, l. 17; and its translation, Stokes' H. L. B., p. 553, ll. 1—3 (sec. II. para. 32).

[5] P. 18, ll. 12 to 15; and translation, Stokes' H. L. B., p. 570, l. 26 to p. 571, l. 5 (sec. II. paras. 107 and 108).

[6] See l. 43, p. 2, l. 8.

[7] See *pari.* iii., 1st part, leaf 13, p. 2, l. 10.

[8] Journal of the Asiatic Society of Bengal, vol. XXXV. Part I. pp. 158, 159.

[9] It is rather strange that the Kaustubha, not including this text in his extract from the chapter from Śaunaka, should still attribute it to Śaunaka; unless it be that its author was quoting from memory on the latter occasion.

Vyavahára Mayúkha. These extracts correspond with the manuscript of Dr. Bühler. On the other hand, the Dattaka Mímámsá, the Dattaka Chandriká, and my own manuscript of Śaunaka Kárikás do give the said text. I am, therefore, inclined to hold with Dr. Bühler that there were two versions of this chapter of Śaunaka, the one Máhárâshtra as he calls it, and the other the Gauḍa or Eastern.[1] That being so, it appears to me that we should follow that which has been practically adopted on this side of India, and that would be the version of the Vyavahára Mayúkha, which I have above called the Mahárâshtra one. That version contains the first half of the above verse, but that half does not establish a prohibition of the adoption of a daughter's or a sister's son among the three higher classes. This has been very elaborately and ably shown by Śankara Bhaṭṭa in his Dvaitanirṇaya and by Nílakaṇṭha in his Vyavahára Mayúkha.[2] The Mayúkha's reading of the first line is slightly different from that noted above, which is Nanda Paṇḍita's. The Mayúkha's reading is as follows:—दौहित्रो भागिनेयश्च शूद्रस्यापिच दीयते, which means that a daughter's son and a sister's son are given [in adoption] even to a Śúdra. The words च (*cha*) and अपि (*api*) in this line occur in the readings of this line in the manuscript of Dr. Bühler and in the Samskárakaustubha[3]; so that the said line so read, not only contains no prohibition, but allows by direct implication a daughter's or a sister's son to be adopted by any one of the three higher classes.[4] It is thus the latter half of the verse which, controlling as it is supposed to do the meaning of the first half, affords any ground at all for the prohibition. Mr. Sutherland translates the above text as follows:—"But a daughter's

[1] Dr. Bühler, considering Kubera and Nanda Paṇḍita as Southerners, calls the second version a southern one. But I have elsewhere shown that they are both writers of the East. See Mr. Nelson's observations in his View of the Hindu Law as administered in Madras, pp. 93, 94.

[2] See above p. 53, l. 20, to p. 56, l. 9.

[3] See Dr. Bühler's notice of the Śaunaka Smriti in the Journal of the Asiatic Society of Bengal, vol. XXXV. Part I. p. 159 (v. 12 with note on it).

[4] Kṛishṇabhaṭṭa notices the above argument based on the words च and अपि, but does not consider it satisfactory in so far as according to him such an interpretation renders the text nugatory. He says: नच तत्र चकारादन्येषामपि समुच्चयः कुतो न भवति एवं च तत्रापेरवधारणार्थकत्वमपि न कल्प्यत इति वाच्यम् तथा सति एतद्वाक्यवैयर्थ्यापत्तेः सर्वेषामेव जातित्वेन तदुभयप्राप्तेरिति. Translation: [It can] not [be said] 'why are not others included [in the text] owing to [the existence of the word] *cha* (and) there? In this way the word *api* (also) too cannot be taken as determinative [*i.e.* in the sense of *eva*]. For in that case this sentence will become nugatory, both [the daughter's and the sister's son] becoming eligible [for a Śúdra] by [the rule which requires] all [adoptees to be] of the same caste.

This objection of Kṛishṇabhaṭṭa is a reasonable one, but it has been satisfactorily answered by the Dvaitanirṇaya and the Mayúkha which interpret the text as laying down that preference is to be shown to a daughter's son or a sister's son by a Śúdra when selecting a son for adoption.

son and sister's son are affiliated by Śúdras. For the three superior tribes a sister's son is nowhere [mentioned as] a son."[1] This translation is neither in accordance with Nanda Paṇḍita's comments on that verse,[2] nor with the plain meaning of the Sanskrit text. Mr. Sutherland ought to have closely rendered Nanda Paṇḍita's language. For he was simply a translator. The correct translation of the verse as interpreted by Nanda Paṇḍita would be as follows:—'A daughter's son or a sister's son is adopted as a son by Śúdras alone. In the case of the three classes beginning with the Bráhmaṇa, a sister's son [and a daughter's son] are nowhere [mentioned as] sons.' I object to this interpretation of Nanda Paṇḍita:—(i.) Because it is inconsistent with the text of Yama beforementioned[3] sanctioning the adoption of a daughter's son; (ii.) because it necessitates the supplying of the word *api* (even) in the line, involves an unnatural rendering of the words *kvachit*, which qualifying *násti* (is not) must mean 'in some places' into *kvachidapi Śástre*, which means 'in any Śástra or law whatsoever,' and needlessly converts the word *bhágineya* (sister's son) into *dauhitra bhágineya* (sister's son and daughter's son); (iii.) because it ignores a distinct usage of the people to the contrary widely prevailing in all parts of India except Bengal; (iv.) because it does not stand to reason that the daughter's son or the sister's son who naturally deserve the first rank in adoption among the *Asagotra-Sapiṇḍa* relations (those that are *Sapiṇḍa* but not of the same *gotra*), should be prohibited when no such prohibition is declared to attach to more distant relations of that class, such as any of the *átma-bandhus*, or even the sons of the daughter's son and sister's son themselves.[4]

In reference to the first ground, I have to state that a *Káriká* should be so interpreted as not to be repugnant to an express Smṛiti. For if it be directly opposed to a Smṛiti, it will have to give way in accordance with the doctrine enunciated amongst others by Laugákshi-Bháskara. This author deduces from the Smṛitis the doctrine that no ceremony beyond giving and receiving is necessary for adoption, and this conclusion being opposed to the Káriká attributed to Śaunaka, remarks शौनकादिकारिकापेक्षया स्मृतीनाम् प्राबल्यम् * * * * इति न काप्यनुपपत्तिः Translation:—'there is no inconsistency, inasmuch as *Smṛitis* are superior to *Káriká*s like those of Śaunaka.' Here I must not omit to mention that this text is attributed not only to Śaunaka, but also to Vṛiddha Gautama by Kṛishṇabhaṭṭa and by the Dattaka Nirṇayá to Nárada. It is difficult to

[1] Stokes' H. L. B., p. 564, ll. 3—5.

[2] See Stokes' H. L. B., p. 567, ll. 19—38.

[3] See above p. 483 l. 19.

[4] The son of a *bhágineya* was recently adopted by the widow of the late Gokuldas Tejpal under the sanction of the Bombay High Court, and this is one of the many well-known cases of non-Śúdra adoptions.

say positively at present how far these references are correct; as there are no critical editions of any *Smṛitis*, save those of Manu and Yájñavalkya. While the Dattaka Nirṇaya refers the said text to Nárada, it is not to be found in Dr. Jolly's translation of it. If, however, the correctness of the two references be assumed, the result will be that there will be a text on one side allowing the adoption of a daughter's son, and another text on the other side disallowing it by implication. There are two ways in which our jurists get out of such a difficulty, one is to follow either text;[1] the other is to hold that the two texts refer to different parts of the country. The Dattaka Nirṇaya quotes an authority for the latter mode of interpretation. He says: श्रुतेर्द्वैधे स्मृतेर्द्वैधे स्थलभेदः प्रकल्प्यते. 'Translation:—'When Śrutis or Smṛitis disagree [on any point], a difference of place [where they are adopted] is assumed [for the purpose of reconciling them.]' The existence of the prohibition in reference to some parts of India and the non-existence of it in reference to others is in my opinion the real solution of the whole question, and is, as I would presently show, what is intended by the said verse.

In reference to the second ground, I have to remark that the addition of *Api* (even), which makes a considerable alteration in the sense, is entirely unwarranted. Remembering the extreme tendency of our treatise-writers to reconcile conflicting Smṛiti texts, though apparently irreconcileable, I should have excused the introduction of that word, had it been done for reconciling the text in question with another which unambiguously contained the same prohibition. I am aware that Śákala's text quoted by Nánda Paṇḍita at page 18, line 14, may be cited as one such. But that is a very unsatisfactory text, as I shall have occasion to remark hereafter.[1] In regard to the metaphorical interpretation made by Nanda Paṇḍita, no authority or necessity for it has been shown by him. Finally, in regard to Nanda Paṇḍita's remark regarding the word *bhágineya* (sister's son) as an *upalakshaṇa* (an illustration of a class), I must say that Nanda Paṇḍita herein furnishes a vivid example of the way in which some writers are often found twisting words into unnatural meanings without any warrant whatever, and merely for the purpose of making a text conform to their own notions of *Dharma* as it should be. While granting that the conciseness of expression observed in our writers does sometimes require that a meaning more comprehensive than its ordinary signification should be assigned to a particular word, it is still regarded as the primary rule of construction that the plain meaning of every word should be given to it, unless the context absolutely requires otherwise. The simple fact that the daughter's son and the sister's son are named together when they are recommended for Śúdras, affords no warrant for holding that they should be so named together when they

[1] See below p. 495.

are to be prohibited for the three higher classes. Nanda Paṇḍita says that he considers the term *bhágineya* (sister's son) as including a daughter's son, in order to avoid the splitting up of one text into several sentences. But he forgets that the splitting up of a text is not invariably a fault of construction, and has often to be adopted under particular circumstances. In the present instance, the facts that the adoption of a daughter's son or a sister's son is allowed in many parts of India, and that there exists a distinct Smṛiti text allowing the adoption of a daughter's son, are reasons why the text in question should be interpreted strictly, and why the apparent वाक्यभेद (the splitting up of one text into several sentences) should be accepted as intended by the author. To show further how Nanda Paṇḍita has recklessly adopted the said mode of construction, I have only to draw the reader's attention to another interpretation which Nanda Paṇḍita has himself put on the word in the self same text when he happens to quote it in an earlier part of his work, as laid down by Vṛiddha Gautama.[1] He there says: भागिनेयपदं भ्रातृपुत्रस्याप्युपलक्षणम् (the term *bhágineya* stands for a brother's son as well). If this sense be fitted to the word *bhágineya* (sister's son) in his passage at page 17, l. 6, it will follow that according to him even a brother's son should be prohibited for adoption by any of the three higher classes. This would be evidently absurd. Again, one of the conclusions which he has arrived at in his comments on a text of Manu (chap. IX. v. 182) is that a female can adopt her sister's son.[2] But in the alleged prohibitory text in question, the terms *dauhitra* (daughter's son) and *bhágineya* (sister's son) must necessarily be taken in reference to the adopting party, whether male or female; so that if a sister's son is not to be adopted, he should be excluded whether he is the son of the sister of the adopting husband or of the adopting wife.

In regard to the third ground I must note that the existence of a time-honored custom, allowing the adoption of a *dauhitra* (daughter's son) or *bhágineya* (sister's son) is testified to in distinct terms by the Dvaita-Nirṇaya and the Vyavahára Mayúkha, and also impliedly by Kṛishṇa Bhaṭṭa.[3] I have made special inquiries on the subject, and I have no hesitation in stating that in this presidency such adoptions are common, and not the slightest taint attaches to them on account of such relationship.

The fourth ground is so self-evident that I need not say much in support thereof. But I would ask my readers to view the subject from another standpoint in reference to one of the two sons in question. The *dauhitra* (daughter's son) has in ages past been always regarded as himself a son

[1] See Dat. Mím. p. 10 l. 18.
[2] See Dat. Mím. p 10 ll. 24, 25.
[3] See above p. 54 l. 15 and p. 56 l. 16.

under certain circumstances, viz., when the daughter (his mother) had no brother, and she was given in marriage under an agreement that the first son born of her was to be taken by her father, as his son to perpetuate his own family.[1] The *dauhitra* was then called *putrikáputra* (son of the appointed daughter), and as such he enjoyed a rank above a *dattaka* son.[2] A notable example of this usage is supplied by the Mahábhárata. It is the adoption of Babhruváhana, son of Chitráṅgadá, by Chitraváhana, king of Maṇipura and Babhruváhana's maternal grandfather.[3] Chitráṅgadá was given in marriage to Arjuna under the above condition, and the son born of her succeeded *her* father. The commentator Nílakaṇṭha affirms the observance of this custom to this day in the country of Southern Kerala. He says:—अद्यापि पुत्रिकापुत्रस्यैव राज्यमिति दक्षिणकेरलेष्वाचारो दृश्यते. Translation:—To this day is the custom of principalities [descending] to a putrikáputra (daughter's son) alone observed in the Southern) Keralas. Even where such special circumstances do not exist, a daughter's son is simply as such declared by Vishṇu to be a *pautra* (a son's son); and this recognition of his status applies to the former as well as the present age.[4] This past history of the *dauhitra* renders it unaccountable why by the adoption of a fanciful theory of *Niyoga*, &c. which is now positively illegal, he should at this time be so far degraded as to be declared ineligible for adoption, and it casts a considerable suspicion over the text of Śaunaka or Vṛiddha Gautama in question.

Having thus attempted to show that even if the above text be genuine, its interpretation as implying a general prohibition of the adoption of a *dauhitra* or *bhágineya* by one of the three higher classes is not correct, it becomes imperative that I should give my own translation of the said text. It is as follows:—'Śúdrás [should] adopt a daughter's son or a sister's son. A sister's son is in some places [not adopted as] a son among the three [classes beginning] with a Bráhmaṇa.' Thus rendered, the first half would record a circumstance that a daughter's son or a sister's son is the first eligible adoptee for a Śúdra just as a brother's son is for the twice-born; and the latter half would simply note a local custom prohibiting a sister's son. This is the correct translation of the said verse, and thus rendered the text does not lay down any prohibition in regard to the adoption of a daughter's son at all; and in reference to a sister's son it states that the sister's son is prohibited in some parts of the country, thereby clearly intimating that excepting those parts, there is no prohibition for the adoption of a

[1] See above Part I. p. 38 l. 25 and translation Part II. p. 49 ll. 33—35.

[2] See Yájñavalkya ch. ii vv. 128—132; Strange's Hindu Law vol. II. p. 197.

[3] See Mahábhárata Adi Parvan, *Adhyáya* 215, vv. 23—25 (Parvan I. l. 230, p. 2). See Manu ch. ix. vv. 128, 129 for similar instances.

[4] See above p. 79 ll. 35—48. See Manu ch. ix. vv. 133, 139.

sister's son in the entire country. The question whether a custom of so exclusive a character does exist in any part of the country, is one to be proved in each case by those who assert it. The correctness of my translation is supported by the following considerations :—I., that it is consonant to the interpretation of the preceding line of this same verse by Śaṅkarabhaṭṭa and Nílakaṇṭha and also to the customs affirmed by them to exist; II., that it is more natural than the one proposed by Nanda Paṇḍita; III., that it reconciles past history and present practice to the text in question.

Having disposed of Śaunaka's text I now come to the second text, namely, that of Śákala.[1] That text cannot be taken as universal authority, first, because it has been only used by Nanda Paṇḍita and Krishṇa Bhaṭṭa. The former no doubt uses it in support of his doctrine which has never been adopted by the people on this side of India; while the latter quotes it as a piece of information, and as one opposed to the doctrine propounded and the custom found by the *Bhaṭṭas*. Again, the Kárikás attributed to Śákala contain *vratas, śántis*, and allusions to modern forms of Vishṇu worship, and these seem to stamp it as a very modern production not to be compared with Manu, Yama, and other Smṛitis. This seems also probable from the fact that the verse in question has not been noticed either by Vijñáneśvara or by the Bhaṭṭas. Again, as all Kárikás generally are, this Kárikā of Śákala must be a production not emanating from Śákala himself, but as one based on some work of Śákala now lost. Viewed in this light, the author of the Kárikás as now found cannot claim any weight such as to undo a long and well established usage or custom, and supported by such cogent reasoning as that of Śaṅkara Bhaṭṭa, Nílakaṇṭha and others. Even an examination of his chapter on adoption shows that the compiler has executed the work of compilation rather perfunctorily, for he seems to lay down his law only for the twice-born classes, and he does not contemplate adoption by Śúdras at all. Moreover, this writer stands alone in excluding a mother's sister's son from adoption, and he further does not show how he distinguishes a mother's sister's son from a father's sister's son, or a mother's brother's son.

The last matter to which I shall now allude in relation to this part of the subject is that of the adoption of a brother by a brother. The law and usage in this matter is that it is improper for a younger to adopt an elder brother. But it is quite proper and agreeable to law and usage of the country for one elder brother to adopt his younger brother as *dattaka* son, the giver being the father and mother or either of them,

[1] See Dr. Bühler's remarks on the Śaunaka Kárikā in the Journal, Bengal Asiatic Society, vol. XXXV. p. 155, which with some alterations will apply to the Kárikás of Śákala as well.

or as *Svayandatta* when both the parents are dead. Some of the authorities on this head have been mentioned before;[1] and the rest are collected in the note below.[2] Yajñeśvara Śástrí distinctly says that the elder brother cannot be adopted because he could not be looked upon as a son, whereas the younger is so looked upon, and he is therefore a very proper object for adoption; and, according to Yajñeśvara, he may become also a *Svayandatta* or *Kritrima* son.

Going next to the question of status, the first case for discussion is that of the eldest son. Can he be given? According to Vijñáneśvara[3] and his followers, an eldest son should not be given agreeably to Manu ch. 9 v. 106; and according to Anantadeva, Káśínatha Upádhyáya, and Bálambhaṭṭa, he should not be given because of the text which runs as follows[4]:—न ज्येष्ठं पुत्रं दद्यात्. Translation:—The eldest son should not be given [in adoption].

This moral advice, however, has never been regarded by our courts[5] as anything more than directory; and the community view it only as a moral maxim which they set aside at their pleasure. That Vijñáneśvara has evidently so understood this passage is shewn by the Vyavahára Mayúkha.[6] Nílakaṇṭha, however, goes beyond Vijñáneśvara, and further holds that the text of Manu cited by the latter constitutes no prohibition at all.[7] In regard to the text cited by Anantadeva, Káśínátha and Bálambhaṭṭa, the facts that Vijñáneśvara apparently knew no such text, and that Nílakaṇṭha in his Vyavahára Mayúkha expressly declares his ignorance of it,[8] and that it is cited by no other author, throw very great doubts upon its genuineness. The fact again that Anantadeva, Káśínátha, and Bálambhaṭṭa are unable to refer it to any particular author, lends strength to the above doubts.

The next subject I have to notice is the giving in adoption of an only son. A precept about not giving nor receiving in adoption an only son is found in some of our Smritis. But this, like that about the eldest son, has been always regarded as purely directory, or recommendatory. The usage of adopting such a son has been both ancient

---

[1] See above pp. 474—477.

[2] Yajñeśvara Śástrí's Putra Kalpalatá, pp. 38, 39; Steele's Summary of the Laws and Customs of Hindu Castes, &c. 1st ed. pp. 51, 52.

[3] Mit. ch. ii. l. 55 p. 1 ll. 12 and 13, and translation, Stokes' H. L. B. p. 416 ll. 9—13.

[4] No author's name is given.

[5] I. L. R. II. Calc. p. 365, *Veeraper amull Pillai* v. *Narrain Pillai*; 1 Strange 91, *Perwall Naicker and another* v. *Potterammull and others*, Madras S. A. Rep. for 1851, p. 254; *Sitaram* v. *Dhonookdahre Sahye*, (Hays' Reports for 1862, p. 260; Borradaile's Reports vol. II. p. 85.

[6] See above Part I. p. 39 ll. 21—23 and translation, Part II. p. 51 ll. 22—26.

[7] See above Part I. p. 32 ll. 23—25 and translation, Part II. p. 51 ll. 27—35.

[8] See above p. 51 l. 29.

and general, and has been followed by the preceding Governments as well as by our own. It has been also generally upheld by our courts.[1] I should accordingly have not thought it necessary to say anything more about it, if it had not been for two recent judgments calling in question the said usage and a long and uniform current of judicial decisions. To this end I shall now first examine the texts bearing on this subject, and show how they have been accepted by the people. There are two texts bearing on this subject, one of Vasishṭha and the other of Śaunaka. They are cited by the Vyavahára Mayúkha, Part I., on page 40, ll. 16, 17, and page 42, l. 6,[2] by the Dattaka Mímámsá,[3] the Dattaka Chandriká,[4] the Samskárakaustubha,[5] the Dharmasindhu,[6] and the Mitákshará.[7] Of these the last two note only the text of Vasishṭha. I maintain that the said texts must be regarded purely as laying down a recommendation based on obvious worldly reasons and nothing more. I begin with that of Śaunaka. It runs as follows:—नैकपुत्रेण कर्तव्यं पुत्रदानं कदाचन । बहुपुत्रेण कर्तव्यं पुत्रदानं प्रयत्नतः Translation :—One having an only son should

[1] BOMBAY :—
*Huebut Rao Mankar* v. *Govindrao Balvantrao Mankar*, 1821, Barnard Judge, 2 Borradaile 75; S. E. 1 Morley, p. 24; *Vishram Baburao* v. *Narainrao Kashi*, 1857, by Morris, Bom. S. D. Rep. 26; *Raje Vyankatrao Anandrao Nimbalkar* v. *Jayavantrao Bin Malharrao Ranadive*, 1867, Warden and Gibbs, J. J., 4 Bombay H. C. R. (A. C. J.) 191; *Vithoba Khandappa Gulve* v. *Mhalsabai*, 1862, Sausse, C. J., Hebbert and Forbes, J.J., 7 Bom. H. C. R. App. XXVI.

MADRAS :—
*Chinna Gaundan and another* v. *Kumara Gaundan*, 1862, Scotland, C.J., and Frere 1 Madras H. C. R. 54; *Veerapermall Pillay* v. *Narrain Pillay*, 1 Strange 91; S. C. 1 Morley's Digest page 16 para. 37 *Case of the Raja of Tanjore* cited in 1 Strange 126, S. C. 1 Morley p. 17 para. 39; *Arnachellum Pillay* v. *Jyasamy Pillay*, 1 Madras S. D., (1817) p. 154, Scott, Greenway, and Ogilvie; S. C., Morley p. 17, para. 41. C. No. 11 of 1849, 29th November 1851, Madras S. D. R. for 1851, p. 234, S. C. S. V. Rhetty's Rulings p. 56; *Singamma* v. *Vinjamuri Venkata Charlu*, 1868, Bittleston and Ellis, J. J., Madras H. C. R. 164.

ALLAHABAD :—
*Hanuman Tiwari* v. *Chirai and another*, 24th February 1879, Stuart, C. J., Pearson, Spankie and Oldfield [Turner, J. dis.] Indian Law Rep., 2 Allahabad Series 164.

CALCUTTA :—
*Sreemutty Joymony Dossee* v. *Sreemutty Sibosoondry Dossee*, 1837, Ryan, C. J., Grant and Malkin, J. J., 1 Fulton's Reports 75.

[2] For translation, see above p. 53, ll. 11, 13, and p. 57, ll. 9—10

[3] See p. 18, l. 24, to p. 19, l. 7, and translation, Stokes' H. L. B. p. 571, l. 31 to p. 572, l. 19 (Sec IV., paras. 1—4).

[4] See p. 51, ll. 6 to 10, and translation, Stokes' H. L. B. ll. 12 to 25 (Sec. I., paras. 29 to 31).

[5] See l. 44, p. 1, ll. 2 and 35 and l. 47, p. 1, ll. 10 and 11.

[6] See *pari.* iii., 1st half, l. 13, p. 2, ll. 10—11.

[7] See ch. ii., l. 55, p. 1, l. 12.

never give him in adoption; one having several sons should give a son [in adoption] with every effort.[1]

Those who object to the above rendering of दानं कर्तव्यं occurring in the first half into 'should give,' must make out why that expression is to be rendered into 'must give' in this place. For they can only do so if they are prepared to hold that a man can compel his neighbour having many sons to give one of them in adoption to him by a suit at law; or that the word कर्तव्यं (may be done) is one that can bear being put into that positive shape in this instance alone. The word कर्तव्यं which occurs in the above verse is capable, indeed, of being translated severally into 'should be done,' or 'must be done,' or 'is proper to do.' But if it be once translated in one way when occurring in the first half of the verse, it must be translated in the same way when occurring in the latter half. This done, the gift of a son would, if the prohibition of an only son is to be regarded as peremptory, have, under particular circumstances, to be viewed as a peremptory command, a disobedience of which ought at the least to be visited with a penance. But no penance of the kind is seen in any of our Smritis or digests.

There is a much stronger ground for holding that Śaunaka himself regarded this precept as purely directory. In his *kárikás*, Śaunaka has laid down a number of precepts positive as well as negative in reference to adoption. The following are such precepts by Śaunaka in this matter[2]:—

(1) The adopting person should ask for a son;

(2) By the Bráhmaṇas, the adoption (literally reception) of a son should be made from amongst *Sapiṇḍas*;

(3) In absence of him, from *Asapiṇḍas*; but from elsewhere it should not be made;

(4) In all classes it should be from amongst the [respective] castes, and not from elsewhere;

(5) One with one son should not make a gift of a son;

(6) One with many sons should make the gift of a son with every effort.

All the above precepts are equally commendatory, and there is no reason for holding one more obligatory than the rest. But there is still another argument positively showing that Śaunaka himself viewed this matter in the light I am doing now. For, in reference to one alone out of the above precepts, viz., No. 4, he says that its disregard would

[1] Mr. Borradaile translates the word प्रयत्नतः into 'on account of difficulty,' instead of 'with every effort,' as I have given above. (See Stokes' H. L. B., p. 61, ll. 30—33.) Mr. Borradaile's translation is evidently copied from that of Mr. Sutherland (see Stokes' H. L. B., p. 571, ll. 32 to 36). I have rejected this strained interpretation of the word, though it is supported by Nanda Paṇḍita, because the word has not been so understood by any other writer.

[2] Part I. p. 40.

work a partial disability in the temporal status of the adopted; in other words, if one of a different caste be adopted, he will be entitled only to maintenance, but his adoption stands.[1] The non-attachment of any penalty in case of the disobedience of the rest of the precepts leads one, on the principle of *expressio unius est exclusio alterius*, fairly to the inference that they were laid down as recommendations, or, if I may call them, duties of imperfect obligation, a disregard of which could not be taken account of by any temporal power. In every one of our ancient Smritis, there is a complete fusion of commands of perfect and commands of imperfect obligation, and this fact once realized, it cannot be a hard matter to draw the line of demarcation. An attempt to give effect to all texts alike as though they were of an equally obligatory nature, would be to ignore a rule well known to all students of the Hindu Dharmaśástra.

I now pass on to the second text, namely, that of Vasishtha. It runs as follows[2]:—शुक्रशोणितसम्भवः पुरुषो मातापितृनिमित्तकस्तस्य प्रदानविक्रयपरित्यागेषु मातापितरौ प्रभवतः न त्वेकं पुत्रं दद्यात् प्रतिगृह्णीयात् वा स हि संतानाय पूर्वेषाम्. Translation:—"Man produced from virile seed and uterine blood proceeds from his father and his mother as an effect [from its cause]. Therefore his father and mother have power to give, to sell, or to abandon their son. But no one should give or receive an only son, for he saves the man [from *put* or *hell*]."

This text on the most approved principles of criticism must also be treated as a recommendatory one, inasmuch as it contains a precept that is intended for a certain specified purpose. It is a rule of the Púrva Mímámsá that all texts supported by the assigning of a reason are to be deemed not as *vidhi* but simply as *artha-váda* (recommendatory). When a text is treated as an *artha-váda*, it follows that it has no obligatory force whatever. Śabara Svámin constructs an *adhikaraṇa* (a topic) on this head, which he calls *hetumannigadádhikaraṇa* (a topic in regard to texts which contain a clause containing the reason of the precept) out of five *sútras* of Jaimini, ch. I., quarter II., 26—30, and which he begins as follows[3]:—अथ ये हेतुमन्निगदाः—शूर्पेण जुहोति, तेन हि अन्नं क्रियते'—इत्येवमादयः तेषु सन्देहः किं स्तुतिस्तेषां कार्यं उत हेतुः Translation:—Now in regard to such *nigada* (texts) having [a clause assigning a] reason, as 'one should sacrifice by means of *Surpa* (a winnowing basket); for by means of that food is prepared,' a doubt arises as to whether they are simply commendatory or contain a reason [making them obligatory.] His final reply to this query is तस्माद्धेतुमन्निगदस्यापि स्तुतिरेव कार्यम्. Translation:—'Therefore the import of texts having a clause that contains a

[1] See Dat. Ch. p. 49 ll. 1—3 and Dat. Mím. p. 18 ll. 17—20.

[2] The above is the reading of the Samskárakaustubha, the Dat. Ch. and the Dat. Mím. and the Calcutta Edition of Smritis. The Mayúkha reads स हि जायते पुरुषं instead of स हि संतानाय पूर्वेषां, see above Part I., p. 42, l. 6. This difference of reading is immaterial for the purposes of the following discussion.

[3] See the Mímámsá Darśana, Bibliotheca Indica, pp. 53 to 55.

reason is commendation only.' This principle is made still clearer by Śabarasvámin in his comments on Jaimini's *sútra* 4, of chap. I. quarter III. (see Mîmámsá Darśana, Bib. Indic. p. 68). Kubera has made use of this principle for showing that in one case at least the text of Vasishṭha in question is not peremptory. He says where the adopter is an uncle, an only son may be adopted though as a *Dvyámushyáyaṇa*, and holds that this may be allowed in spite of the said text which is apparently universal, because the extinction of lineage which is assigned in the text as the reason of the prohibition does not apply in the case of a *Dvyámushyáyaṇa* adoptee. Kubera by this reasoning distinctly subscribes to the principle that the statement of a reason in a text controls its apparent scope and character. Nanda Paṇḍita too does the same.[1]

The principle being thus clear, all its consequences must follow; and on the analogy of Kubera and Nanda Paṇḍita who allow a *Dvyámushyáyaṇa* adoption of an only son by an uncle because the fear of the extinction of lineage does not in that case arise, we may say that an only son may be given in adoption by a father or mother who propose to attend to their own salvation, and that of their forefathers by either begetting another son, or adopting a son, or by following one of the numerous ways beforementioned[2] of satisfying the debt to the manes. I am not putting forward any imaginary contingencies; for within my knowledge there are numerous examples of people having given away their only sons in adoption, and having subsequently either got legitimate sons or adopted sons on despair of begetting issue. These examples are drawn from all classes and from all strata of society in this Presidency.[3]

I will now shew that there are instances in the Vedas and Puráṇas of a violation of this alleged prohibition, and that, among the digest writers, Vijñáneśvara, Srínátha Bhaṭṭa and Jagannáth have expressly stated their views, declaring this text to be merely commendatory.

The first historical instance of the adoption of an only son is that of Ṛishi Atri giving away all his sons to Aurva.[4] He thus made himself

[1] Dat. Mím. p. 11 ll 9—12; and translation, Stokes' H. L. B. p. 554 l. 21 to p. 555 l. 2.

[2] See above pages 456, 457.

[3] The following may be noted as historically well-known cases of the adoption of an only son:—Shahaji, son of Maharaja Pratáp Simha (Sattara); H. H. Sivaji Mahárája (Kolhapur), the reigning prince is an only son; so was his adopting father H. H. Rajaram Mahárája, who died at Florence, and who was moreover a sister's son; and his father afterwards adopted a son with the sanction of the British Government. Several cases amongst the well-known Purandares of Sáswad, Bahiropant Pingley, the last Peshwa of the Satara Rajas, the late Chief of Bhore, and scores of other examples are available.

[4] See above page 455.

sonless and broke through the above precept. Again, as described in the Káliká Puráṇa, the adoption of the son of Bhairava by Vetála is another example. This is explained away by some writers as being an instance of the *Dvyámushyáyaṇa* form of adoption, and as not affecting Vasishṭha's general precept.[1] But this explanation is unsatisfactory. For, even granting that Suveśa, the son of Bhairava, was a *Dvyámushyáyaṇa*, the text of Vasishṭha under consideration makes no such distinction, and lays down its precept in general terms, that an only son should neither be given nor received. If therefore giving and receiving is as necessary in the *Dvyámashyáyaṇa* adoption as it is in the *Kevala* (simple or absolute) adoption, (and this necessity of the gift and acceptance is conveyed by the word *dattaka* itself), then it appears to me to be a simple trifling with language to say that a gift and acceptance of an only son, be it of any kind, has, as a matter of history, taken place, and yet the text has remained unviolated. The next instance I cite is that from the Devi Bhágavata[2] of the sale of his only son Rohita or Rohitásya by Harischandra, a king of the solar dynasty. This instance, although that of the sale of an only son, is quite in point, because sale according to Hindu law involves gift and acceptance as much as any charitable gift,[3] and because the prohibition of the gift of an only son is introduced as an exception to the early part of the text, which in general terms asserts the parent's power over the sons in respect of gift in adoption, sale, or abandonment. If sale involves a gift, and if that gift is prohibited in respect of an only son, it seems inevitable that the sale of an only son should, under the said text, be considered as much prohibited as his gift in adoption.[4]

I shall now give the views of Sanskṛita digest-writers on this subject. The Dattaka Nirṇaya of Srínátha Bhaṭṭa quoting Vasishṭha's text in question says in reference to its prohibition of the gift of an only son as follows:—अत्र एकपुत्रदाननिषेधो दुरदृष्टज्ञापनार्थं न तु दानासिद्ध्यर्थम् :—Translation:—Here the prohibition of the gift of an only son [is made] to show the sin [which its violation involves] and not the invalidity of the gift [itself].

Jagannátha says in reference to this text that though the acceptance of an only son is prohibited, "this does not invalidate the adoption of such a son *actually* given."[5] Last of all, Vijñáneśvara says the same thing. I will here extract the major portion of his comments on the

---

[1] See Dat. Mím. page 12, and Dat. Ch. pp. 50, 51.

[2] See Skandha VII., chs. 20—22.

[3] Mitákshará ch. ii. leaf 48, p. 1, l. 8; 1 Strange's H. L. 19.

[4] See the observations of the Prakáśa noted in Jagannatha's Digest, vol. II. p. 387.

[5] See Colebrooke's Translation, vol. II. pp. 387, 388.

latter line of chap. II. v. 130 where Yájñavalkya defines an adopted son. They run as follows :—

"माता भर्त्रनुज्ञया प्रोषिते प्रेते वा भर्तरि तत्पित्रोभाभ्यां सवर्णाय यस्मै दीयते स तस्य दत्तकः पुत्रः यथाह मनुः माता पिता वा दद्यातां यमद्भिः पुत्रमापदि सदृशं प्रीतिसंयुक्तं स ज्ञेयो दत्रिमः सुत इति आपद्ग्रहणादनापदि न देयो दातुरयं प्रतिषेधः। तथा एकः पुत्रो न देयः न त्वेवैकं पुत्रं दद्यात्प्रतिगृह्णीयाद्वेति वसिष्ठस्मरणात्। तथानेकपुत्रसद्भावेपि ज्येष्ठो न देयः ज्येष्ठेन जातमात्रेण पुत्री भवति मानव इति तस्यैव पुत्रकार्यकरणे मुख्यत्वात्."

Translation :—He who is given by his mother with her husband's consent, while her husband is absent or [without his assent] after her husband's decease, or who is given by his father, or by both, being of the same class with the person to whom he is given, becomes his *dattaka* (adopted) son. Thus Manu (chap. IX. v. 168) says : "He whom his father or mother affectionately gives to another as his son, being alike (by class) and in a time of distress, confirming the gift wtih water is called an adopted son."

By specifying distress, [it is intimated that the son] should not be given unless there be distress. This prohibition regards the man [and not the act of adoption.][1] So an only son should not be given.[2] For Vasishtha ordains 'Let no man give or accept an only son.' Nor, though a numerous progeny exist, should an eldest son be given ; for he chiefly fulfils the office of a son, as is shown by the following text. "By the eldest son, as soon as born, a man becomes the father of male issue."

Here in reference to the injunction of Manu chap. IX. v. 168 that a son should not be given in adoption except in distress, Vijñáneśvara says दातुरयं प्रतिषेधः which has been translated by Colebrooke as follows :— "This prohibition regards the giver [not the taker]." This rendering, though sufficient to show that a violation of the precept contained in the passage will not invalidate the adoption made, is inaccurate, and has led to much misconception on the subject. Some of Mr. Colebrooke's readers, seeing that the violation of one precept, viz., that about the non-gift of a son except in distress, was considered allowable, because, as they thought, the precept respected the giver alone, have been led to infer that in the case of another precept, which respects both the giver and the taker, no such violation could be allowed. But nothing could have been further from Vijñáneśvara's mind when writing the above line ; for as one deeply versed in Hindu Dharmaśástra, he knew full well that the questions of the invalidity of an act, and the moral sin attaching to the doer on account of that act, were independent of each other. He also knew that the prohibition of the gift of a thing implied the prohibition of its acceptance, even if such prohibition were not expressly laid down. This has been declared by Nanda Pandita

---

[1] Colebrooke renders दातुरयं प्रतिषेधः by 'this prohibition regards the giver [not the taker.]' This is the apparent sense of the passage. I have given the correct rendering above, and my grounds for it will be given further on.

[2] Colebrooke uses the words 'must not be given' here for the Sanskrit words न देयः, which he himself in the next following sentence translates by 'should not be given. This difference in the rendering of one and the same expression is unwarrantable, and has misled some of Mr. Colebrooke's readers into wrong conclusions.

himself in reference to the aforementioned[1] text of Śaunaka prohibiting the gift in adoption of an only son. He says :—अत्र स्वत्वनिवृत्तिपूर्वकपरस्वत्वापादनस्य दानपदार्थत्वात् परस्वत्वापादनस्य च परप्रतिग्रहं विनानुपपत्तेस्तमप्याक्षिपति । तेन प्रतिग्रहनिषेधो ऽप्यनेनैव सिध्यति.[2] Translation :—" Since the word *dána* (gift) means the establishing another's property after the previous extinction of one's own : and since another's property cannot be established without his acceptance, that [acceptance] too is condemned. Thus, a prohibition likewise against acceptance is established by that very [text]."[3] It would accordingly not be doing any credit to Vijñáneśvara's acumen to say that the antithesis he contemplated in the said line, was between the giver and the taker. The real antithesis contemplated by him has been brought out by the Mayúkha in its extract of this line of Vijñáneśvara. The Mayúkha says :—अयं निषेधो दातुरेव पुरुषार्थो नकत्वर्थ इति विज्ञानेश्वरः[4] Translation :—' Vijñáneśvara says this prohibition is for the man alone, *i. e* is *purushártha* (affecting the doer), and not *kratvartha* (affecting the rite).' This interpretation gives the words of Vijñáneśvara their real significance, and shews that the word दातुः (of the giver) as used by him here is of generic import, and stands for the doer of an act or acts in reference to which this remark may be made. It is necessary to treat the word दातुः (of the giver) as अविवक्षित (illustrative) as our writers would say ; for Vijñáneśvara intends that his remark दातुरयं प्रतिषेधः (this prohibition regards the man) should be understood to apply to the two prohibitions that follow, viz., that in reference to an only son and that in reference to the eldest son. It is on this hypothesis alone that we can explain Nílakaṇṭha's remark that Vijñáneśvara considers the prohibition about the eldest son as regarding the man alone, and not the act.[5] And it appears that the use of the word तथा (likewise) by Vijñáneśvara before his passages containing the said two prohibitions would demand that Vijñáneśvara should be understood as applying his remark made in reference to the first precept to the two precepts that follow. Now the intermediate precept, viz., that about the only son expressly referring to the giver and the taker, it will be hard to apply to it a remark which literally refers to the giver alone, unless the word 'giver' in the remark was interpreted as above explained.

---

[1] See above pp. 497, 498, where it is quoted.

[2] See Dat. Mím. p. 19 ll. 2—4.

[3] Mr. Sutherland translates तमप्याक्षिपति by "(Śaunaka) implies this also in his text in question." (See Stokes' H. L. B. p. 572 ll. 5—9.) This is incorrect : *tam* (that) in Sanskrit refers to *pratigraha* (acceptance) and *ákshipati* means 'condemns.' Mr. Sutherland's translation does not bring out the sense of both these words, and gives something as their translation, which makes the passage look either unmeaning or tautological.

[4] See above Part I. p. 39 ll. 9, 10.

[5] See above Part I. p. 39 ll. 22, 23 and translation Part II.

The result of the above interpretation of Vijñáneśvara's passage on adoption is that he considers all the prohibitions he notes in reference to that subject as *purushártha* (referring to the doer.) What the distinction between *purushártha* and *kratvartha* commandments is, Vijñáneśvara himself has told us in his disquisition on the nature of property (see Mit. chap. II. l. 46 p. 2 ll. 5—11 and its translation by Colebrooke chap. I. Sec. I. para. 10 Stokes' H. L. B. pp. 368, 369). Vijñáneśvara was there concerned with the text of Gautama, which lays down the different ways of acquiring property proper to different classes.[1] In reference to this text, he discusses the question whether the enumeration of the ways of acquiring property is intended to exclude property in things acquired by ways other than those enumerated. He concludes by saying that the rule contained in the text being *purushártha*, a breach thereof involves the man in sin, but cannot prevent property arising in things acquired by sinful ways recognized by the people though not laid down by the text. Similarly in the present instance, the directions of Smriti-writers as to how the adoption should be made are simply *purushártha*, and their breach will not affect the validity of an adoption once made. And Vijñáneśvara confirms this conclusion by his interpretation of those three texts that he has cited on the subject.

The following passage from the Nirṇayasindhu[2] will show that though an act be reprobated by the Sástras, yet its performance when complete cannot fail to produce its natural consequences. It runs as follows :—

"दक्षिणार्थं तु यो विप्रः शूद्रस्य जुहुयाद्धविः ब्राह्मणस्तु भवेच्छूद्रः शूद्रस्तु ब्राह्मणो भवेत् ॥ अत्र माधवाचार्यः यो विप्रः शूद्रदक्षिणामादाय तदीयं हविः शान्तिपुष्ट्यादिसिद्धये वैदिकैर्मन्त्रैर्जुहोति तस्य विप्रस्यैव दोषः शूद्रस्तु होमफलं लभत एवेति व्याचक्षते."

Translation:—A Bráhmaṇa who for a money gift performs a sacrifice on behalf of a Śúdra shall become a Śúdra, while the Śúdra will become a Bráhmaṇa. Mádhaváchárya commenting on this says : 'that Bráhmaṇa who receiving presents from a Śúdra sacrifices his offerings by means of Vedic *mantras* for the accomplishment of *Śánti* (the appeasement of evil influences) and *Pushṭi* (prosperity) becomes himself sinful. The Śúdra on the other hand does obtain the fruit of that sacrifice.' The text of Paráśara contained in this passage is cited by Nílakaṇṭha in his Vyavahára Mayúkha (see Part I, page 42 ll. 2—3 and translation, Part II. p. 56, l. 10 to p. 57, l. 3).

It is sometimes said that the prohibition about an only son deserves to be distinguished from other prohibitions, because the breach of the

[1] See above Part I. p. 30 ll. 27, 28.

[2] See Nirṇayasindhu Parichchheda iii. 1st half l. 9, p. 2, ll. 9 to 11.

former is declared by Vasishṭha to affect injuriously the interests of the ancestors while the other prohibitions refer only to parties to the act of adoption. This distinction is without a difference, for if a man can jeopardize the interests of his ancestors by prohibiting his wife from adoption,[1] why can he not do the same while alive by giving away his only son?

Having briefly discussed the Sanskṛita texts and digests on this point, I now pass to English writers. I naturally begin with Sir T. Strange. He thus[2] refers to the case of the adoption of an only son :—

"Such are, in this respect, the restrictions inculcated, but not always enforced; since, as in other instances, so with regard to both these prohibitions respecting an eldest and an only son, where they most strictly apply, they are *directory* only; and an adoption of either, however blameable in the giver, would nevertheless, to every legal purpose, be good; according to the maxim of the civil law, prevailing perhaps in no code more than in that of the Hindoos, *factum valet, quod fieri non debuit.*"

This is consonant to the daily practice and the usages of the people.

In vol. II. there is a note by Mr. Colebrooke at p. 109 to say that the absolute gift of such a son is forbidden. Beyond the two texts above quoted there is no authority for this statement, and Mr. Colebrooke's translation in two different ways of Vijñaneśvara's word नदेय: (not fit to be given) occurring twice in one and the same passage is wrong,[5] and probably has misled Mr. Colebrooke himself. The Sanskṛit is not capable of two renderings, and yet he says in regard to the eldest son that he should not be given, and in regard to the only son that he must not be given. A fruitful parent of disputes! Mr. Ellis's note[4] discusses the same case, and comes to the following conclusion :—

"The point is scarcely worth further discussion, the undoubted law in this, as in all other cases of adoption, marriage, &c. being that if the act be duly completed, it cannot be reversed."

Colebrooke[5] thus translates Jagannatha's comments respecting the validity of an adoption so made :—

"Let no man accept *an only son*, because he should not do that whereby the family *of the natural father* becomes extinct, but this does not invalidate the adoption of such a son *actually* given *to him.*"

Mr. W. H. Macnaughten speaking of the precept against the adoption of the eldest or the only son observes[6] :—

"But this is an injunction rather against the giving than the receiving an only or elder son in adoption, and the transfer having been once made, it cannot be annulled.

[1] See 7 Bombay H. C. R. App. p. 1.
[2] Strange H. L. p. 87.
[3] See Stokes' H. L. B. p. 416, lines 6 and 9.
[4] Strange H. L. pp. 107—108.
[5] Colebrooke's Digest of Hindu Law, vol. II., pp. 387, 388 : 3rd edition.
[6] Principles of Hindu Law by W. H. Macnaughten, vol. I., p. 67, *note.*

This seems but reasonable, considering that the adoption having once been made, the boy *ipso facto* loses all claim to the property of his natural family. See Bombay Reports, case of Hucbut Rao *v.* Govind Rao, vol. II. page 75; also Elem. Hin. Law App. pp. 82, 83."

In vol. II. of the same work[1] are two Bengal cases, which have been sometimes used against such adoptions. The only authority on which they rest is the text of Vasishṭha (नैकं पुत्रं दद्यात् &c.) which has not been correctly rendered, and of which the most has been made by Nanda Paṇḍita and Kubera. The note beginning at p. 178 is incorrect: "By him who has one son only, the gift of that son is not legal." This translation of नैकपुत्रेण क्रतैव्यं पुत्रदानं कदाचन is wrong. It should be—"By one having an only son, the gift of a son should not be made." Again, the words "on account of difficulty" in the last line of the same page are not correct. The phrase is प्रयत्नतः which means "by [every] effort." The rest of Śaunaka's text likewise is not well rendered. Again, the author of Vaijayantí and Dattaka Mímámsá is one and the same, namely, Nanda Paṇḍita; and in no place has Nanda Paṇḍita or any of the above authors maintained that such an adoption, if made, would be void. Mr. Steele says that "an only son may be adopted with the concurrence of both parties."[2]

Mr. Mayne has well summed up the cases on this subject.[3] And when he is supplied with correct translations of the several texts, and an ampler account of our usages, he will have proper materials with which to work. I think the subject of *Dvyámushyáyaṇa* adoption, which is commented on by our digest-writers, has been a great stumbling-block in this discussion. That the digests do contain reference to the Dvyámushyáyaṇa adoption there is no doubt. But the only Puráṇic instance of Bhairava and Vetála having a son in common is always dwelt on, and there is no other example of the kind ever mentioned, nor is one available as I am now able to say after an enquiry extending over a series of years. The result is that the conclusion arrived at by the Madras Sadr Court appears to me to be correct—namely, that the Dvyámushyáyaṇa form of adoption is not recognised in this age.[4] At any rate, whatever may be the theory, it is so in practice. Mr. Mayne is, I think, naturally led to some of his conclusions by this obsolete form of adoption. Further, he is not correct in saying that in the matter of the adoption of an only son, in

[1] Pages 178, 179.

[2] Summary of the Law and Customs of Hindu Castes, 1827: p. 184. And he also says (p. 53) that whenever such an adoption is made, it cannot be annulled after it has been duly performed.

[3] Hindu Law and Usage, sections 126—134.

[4] *Annamala Auchy* v. *Mungalum and others*, 23rd March 1859, Madras S. D. A. Rep. p. 81, Hooper, Strange, Phillips.

Western India, there is very little authority either way.[1] I have cited several published cases decided between 1821 to 1868; and adduced the authority of digest-writers to show that such an adoption is perfectly valid. The case alluded to[2] by him is no authority at all. Sir J. Arnould's remark is, as Mr. Mayne[3] observes, a mere *obiter dictum*, and further it ignores a course of decisions of the Bombay Sadr Diwáni Adalat and the High Court for 48 years, and the usages of the people. Sir Joseph Arnould was not acquainted with Sanskrit, and could not have referred to original authorities. But instead of at once going to Bengal—the law of which on this subject is in many respects quite opposed to the law of Bombay—he should have gone to Madras for information. Mr. Mayne then alludes to Sir F. Macnaughten, who has quoted Śrinátha Bhaṭṭa,[4] a high authority directly in favor of this kind of adoption; but he says nothing about this in his conclusions. Sir F. Macnaughten did not know our digests, nor the fact that there were means of salvation other than the adoption of a son open to a Hindu; nor does he appear to have had any notion of our Mímámsá doctrines or of country usages. He gives his rules for Bengal as he deduces them. He attacks the Paṇdits of Poona, Bombay, and in fact all over the country, as if whenever they came near courts of justice, they were at once tainted with corruption.[5] It is evident he did not know Sanskrit; whence he obtained his information I do not know, and to what tests it was submitted, is not very clear; but I am constrained to say with regret that a work like this, redolent of violent prejudice and preconceptions, is not at all calculated to produce conviction; and that, I apprehend, is the aim of all works of an argumentative character. To return to the argument: the breach of a precept against adoption of an only son may produce sin—aye deep sin, but does it render such an adoption a nullity if once effected? This is the point, and those who argue that it does so, are, in my opinion, confounding what is nothing more than a moral obligation with another and a different thing, viz., an absolute legal prohibition.

Jímútaváhana premising certain texts of Vyása and Nárada which prohibit an alienation of immoveable property by one coparcener without the consent of the rest, says:—तेन दानविक्रयकर्तव्यतानिषेधात् तत्करणाद्विध्यतिक्रमो भवति न तु दानाद्यनिष्पत्तिः वचनशतेनापि वस्तुनोऽन्यथाकरणाशक्तेः[6] Translation:—Thus the effecting of gift or sale being prohibited, if they should [still]

[1] Section 127, p. 118.

[2] *Bháskar Trimbak Áchárya* v. *Mahadev Rámji and others*, 6 Bombay H. C. R. (O. C.) p. 4.

[3] Section 132, p. 121.

[4] Sir F. Macnaughten, p. 126.

[5] Pages 148, 190, 191, 208, 224, &c.

[6] See his Dayabhaga, p. 60.

be effected there would be the transgression of a *vidhi* (command); but there could be no invalidity of gift and the like [already accomplished], for a thing cannot have its nature changed by even a hundred texts.

In respect of marriages completed in contravention of the rule about the *Sapiṇḍa* relationship, and the sameness of *gotra* or *pravara*, it is laid down that though the bride so wedded cannot be the wife of the bridegroom for any conjugal or religious purposes, yet the ceremonies of marriage being complete, she cannot be wedded by another, and must be maintained by the bridegroom whom she has married. (See Nirṇayasindhu, *pari.* iii, 1st half, l. 30, p. 2, ll. 5—8, and Dharmasindhu, *pari.* iii, 1st half, l. 57, p. 1, ll. 4—9.)

Again, those who hold that the doctrine of *factum valet* cannot be invoked to uphold acts done in contravention of texts will be surprized to find that a bride once married to an impotent individual is not free to marry another, and must look for maintenance to the family of that husband.[1]

It has been declared in the Puráṇas that while in the past ages an act mentally done was irrevocable, the present *Kali* age enjoys the privilege of irrevocability attaching only to such acts as have been formally gone through. Thus Sávitri's choice of Satyavat for her husband was irrevocable, though actual marriage had not taken place.[2] In the present age marriage when once performed would be irrevocable, at all events in the higher classes.

In respect to the subject of adoption, the applicability of the principle "factum valet" has been expressly laid down by Sir T. Strange (vol. I. p. 87), by Mr. Colebrooke[3] (see Strange H. L. vol. II. p. 126), by Mr. Ellis[3] (Strange H. L. vol. II. p. 126), and by Mr. Steele (p. 53).

The observance of it in practice has also been testified[4] to by the Poona Śástrís in 1852 A. C. in the document which I have above published.

The next subject for consideration is what ceremonies are necessary for adoption. There is much diversity of statement on this subject; but the better opinion seems to be that nothing beyond the giving and

---

[1] See Yájñavalkya ch. ii., v. 142.

[2] See Mahábhárata Vanaparva chs. 293—299.

[3] I append the notes of Colebrooke and Ellis for easy reference.

*Extracts of Colebrooke's and Ellis's Statements on factum valet* (2 *Strange* 126).

"The adoption being complete, it cannot be annulled. An adopted son may be disinherited for like reasons as the legitimate son. (Mitáksh. on Inh. chap. II. sect. X,) but he cannot forfeit the relation of son."—*Colebrooke.*

"Certainly:—however defective the ceremony, and however small in consequence the spiritual benefit, the act of adoption cannot be set aside on any account whatever; *à fortiori*, not on account of any informality."—*Ellis.*

[4] See above p. 477 ll. 20, 21.

taking is necessary to constitute a valid adoption. I shall briefly state what has been said in favour of and against this proposition.

Mr. Sutherland considers the performance of rites laid down by Śaunaka, Baudháyana and Vasishṭha so imperative, that a neglect of them would work a partial disability to the extent of succession.[1] He cites the Dattaka Mímámsá (p. 29, translation sec. V. paras. 45, 56) and Dattaka Chandriká p. 52 (translation sec. II. para. 17) and p. 65 (translation sec. VI. para. 3).

Mr. Justice Strange considers the performance of ceremonies necessary for the three higher castes (see p. 27 para. 107).

The Dharmasindhu considers the ritual essential; but he notes the practice to the contrary.[2]

Against these are arrayed Sir Thomas Strange—(vol. I. pp. 93—97), Mr. Steele (pp. 52, 53, 185, 186), the Dvaitanirṇaya (see above Part I. p. 41 ll. 21—23 translation, Part II. p. 55 ll. 39—42), Jagannátha's Viváda Bhaṅgárṇava (Colebrooke's translation, vol. II. pp. 389, 390). The Samskárakaustubha does not raise this question specifically; but in reference to the question of succession of an adopted son on the birth of a legitimate brother, it quotes from the Vidhánamálá those texts which Nanda Paṇḍita and Kubera referring them to Manu construe as generally disqualifying from inheritance a son adopted without the due performance of the ritual. The Samskárakaustubha shews that those texts refer to the case of an adopted son who has got a legitimate brother subsequent to his adoption.[3] The Laugákshibháskara goes into this question very elaborately, and comes to the conclusion that the *Homa* (sacrifice) or any other ceremonies beyond giving and taking are not essential for any of the four classes. A decision to the same effect has been passed by the High Court of Madras in Singamma *v.* Venkatacharlu (IV. M. H. C. R. p. 165).

There are other minor points in regard to adoption; these I must pass over for the present.

I shall now make a few brief remarks on decided cases. The first Calcutta case against the adoption of an only son which I shall notice is that of *Raja Upendra Lal Roy* v. *Srimati Rani Prasannamayi.*[4] The decision is passed on the meaning of Vasishṭha's text[5] above cited; and on the analogy of a widow being unable to adopt without the assent of the husband. I am sorry there is no explanation of the terms "religious and legal injunctions" which the judgment uses. The

[1] See his Synopsis Head Third, particularly para. 4.
[2] *Pari.* iii. 1st half l. 13 p. 2 ll. 6—8.
[3] See l. 49 p. 2 l. 9 to l. 50 p. 1 l. 6.
[4] 1 Bengal Law Rep. (A. C.) 223.
[5] Vasishṭha :—नैकं पुत्रं दद्यात् प्रतिगृह्णीयाद्वा स हि संतानाय पूर्वेषाम्।

distinction between the act and the doer is not at all dwelt upon, nor is the Mímámsá doctrine in that matter explained, and the sin of the extinction of lineage seems to have swayed the decision. Not one of the large number of authorities, digests and cases (except one Madras case) available is noticed or discussed. It is said that a widow or woman cannot adopt without the husband's assent; similarly it is urged an only son cannot be given. In the first place, I cannot see the analogy; and, in the next place, I maintain that the woman can adopt, and her power to do this is admitted at least in this presidency. The next ground is "the want of dominion" over the son; but this is opposed to authority.[1] No digests are noticed, except Dattaka Mímámsá and the Dattaka Chandriká; and the two cases from Mr. W. Macnaughten's second volume which are mentioned give no reasons; and they rest moreover on the authority of Nanda Pandita alone.

The next case I shall notice is that of *Manick Chunder Dutt* v. *Bhuggobutty Dossee.*[2] To follow Mr. Justice Markby, what is to be considered is—(1) the language of the text, (2) the comments thereon, and (3) decided cases. To call the text itself a prohibitory one is begging the question. The case does not consider whether the text is an *arthaváda* or *Vidhi*, and if the latter, whether it will affect the *Kratu* (act) or merely subject the *Kartri* (doer) to a penalty. The text about the eldest son is considered permissive, and about the only son mandatory. Upon what principle of the *Mímámsá* the distinction is founded it is not easy to see and none is shown. The texts are as under:—

[About an only son.]

नैकपुत्रेण कर्तव्यं पुत्रदानं कदाचन ॥ Translation:—By one having an only son, the gift of a son should never be made.

[About the eldest son.]

न ज्येष्ठं पुत्रं दद्यात् ॥ Translation:—An eldest son should not be given.

The one is 'should not be made,' the other 'should not be given.' No distinction can here be found in the language. And yet the court has made the distinction.[3] Again, only one digest-writer—namely, Jagannátha—is noticed, but dissented from—no reasons being assigned for the dissent. The Mayúkha and Bálambhatta are not noticed; nor are there any sufficient reasons assigned for setting aside Sriñátha Bhatta. The mistake in Mr. Colebrooke's translation in not using "should" in translating the same word on both occasions, but in one place using 'must' instead, has not been presented to the court, nor has

[1] Mitákshará, chap. ii. l. 70 p. 2; Víramitrodaya, l. 175 p. 1 l. 16; and Nirnayasindhu Pari. iii. l. 10 p. 1.

[2] Indian Law Rep. 3 Cal. Ser. 443.

[3] See Ind. Law Rep. 2 Cal. Ser. 365.

the note in 1 Macnaughten 67 been discussed. None of the Bombay cases except one in the fourth volume Bom. H. C. Reports are noticed at all. Unless Mr. Justice Markby is a Sanskrit scholar, his reason for rejecting Srínátha Bhaṭṭa is inexplicable. If a Bráhmaṇa perform a Vedic *Yajña* for a Śúdra, he commits a heinous sin greater than that of extinction of lineage, and he may suffer for the sin. Similarly does a Śúdra incur sin in performing a *Yajña* (sacrifice), for he is prohibited from performing it (see Śúdra Kamalákara l. 1). But the *Yajña* actually performed is good notwithstanding. The authority of Mr. Colebrooke at p. 107 vol. II. Strange's Hindu Law is based on the wrong use of the word "must" (Stokes' H. L. B. p. 416, l. 6).

The next is a Bombay case (*Lakshmappa* v. *Ramava and others*)[1] decided at the end of 1875, but one of the judgments in which was published in 1879. In this case the point for decision was—whether the adoption of a Súdra after his marriage was valid. Mr. Justice Nánábhai Haridas held that it was so, and so are clearly the authorities. The next judgment is by his Lordship the Chief Justice, and it lays down that—

"A gift by a Hindu widow, of her deceased husband's only son, is invalid in the absence of an express authority conferred upon her by him during his lifetime. Such an adoption, being null and void *ab initio*, cannot be supported by the maxim *quod fieri non debuit factum valet*."

Further, the father's power of giving away his only son is questioned in the same judgment, although no decision on that point is pronounced. It may be mentioned that neither of the two above points was before the court for a decision, and that the fact that the plaintiff was the only son of his natural father was assumed and had not been found; so that it may be said that the judgment on these points is an *obiter dictum*. As such, however, it is against the course of decisions from 1821. The first remark that occurs in reference to it is that Mr. Colebrooke's mistake in regard to the translation of the words न देयः (should not be given) does not seem to have been brought to the court's notice. There is no warrant for translating the same words by two different renderings such as "must not" and "should not." With all deference therefore to Mr. Colebrooke's learning, his translation is clearly wrong.[2] As regards the Vyavahára Mayúkha, it is said that it supports the distinction taken by Mr. Colebrooke in so far as it abstains from attaching to the prohibition about an only son that remark which it is said to have made on noticing the prohibition about the eldest son. This reasoning is unsound, as it does not correctly represent the general tenor of Nílakaṇṭha's remarks. On the subject of adoption, Nílakaṇṭha commences with the text of Manu (ch. IX. v. 168) which Vijñáneśvara

[1] See XII. Bombay H. C. R. p. 364.

[2] See above pp. 502, 510.

notices in his comments on Yájñavalkya chap. II. v. 130.[1] Then out of the three *Pratishedhas* (prohibitions) mentioned by Vijñáneśvara after the above text of Manu, viz., (I.) that about the giving of a son except in distress; (II.) that about an only son; and (III.) that about the eldest son, Nílakaṇṭhá notices only the first and the last, because Vijñáneśvara's remarks in reference thereto did not meet with his approval, and he wanted to dissent from Vijñáneśvara on those points. Then, discussing the question as to whether a daughter could be adopted or not, Nílakaṇṭha passes to another head, viz., the पुत्रप्रतिग्रहप्रकार (the manner of the adoption of a son), and it is under this head that he cites Śaunaka's and Vasishṭha's texts about an only son without making any remark thereon. This being so, it is not correct to attribute to Nílakaṇṭha the remark on the prohibition of the eldest son that such prohibition refers to the giver and not to the taker (note that this remark on the said prohibition has been expressly cited by Nílakaṇṭha as one made by Vijñáneśvara), and secondly, it is incorrect to ground the inference drawn on Nílakaṇṭha's silence in respect to the only son. As already shown, Nílakaṇṭha understood Vijñáneśvara as repeating his remark 'this prohibition applies to the giver alone,' after all the three prohibitions noted by him, including that about an only son. Having so understood him, if Nílakaṇṭha rejects that remark in reference to the first and third prohibitions, and says nothing about it in reference to the second prohibition, viz., that about an only son, the indisputable inference from his silence is that he accepted Vijñáneśvara's remark in reference to an only son. It is said Nílakaṇṭha was 'challenged' expressly to make the remark by a text of Vasishṭha. I do not see how he was, particularly as the text in question could and ought to be construed as directory and not imperative, as I have already shown. Again, it is probably by an oversight that the prohibition about the eldest son has been referred to Śaunaka, who says nothing of the kind. But it serves to increase the confusion. The value of the Dattaka Mímámsá and Chandriká I have discussed before; but there is no "strong" condemnation of such an adoption in sec. IV. paras. 3, 6, and 8. The Mitákshará contains no such absolute prohibition as is here stated. The passage appears to have been misunderstood, as well as Mayúkha's remark, which, as has been already observed, makes the matter still clearer. The Dattaka Mímámsá has never been such an authority in this presidency as it is now stated to be.[2] It does not regulate the ceremonies of the people, and it is an importation from the Gauḍa provinces. I cannot also understand what it is that

[1] See the operative portion of the comment extracted above at p. 502.

[2] See also Journal Asiatic Society of Bengal, 1866, Part I, p. 164; Sir W. Macnaughten's Elem. H. L., vol. I. p. 74.

constitutes Mr. Sutherland an expert on the subject of adoption. He has translated two treatises, it is true, but these require revision, and even on Bengal questions the translation is admitted to be imperfect.[1] Mr. Colebrooke's opinion, as I have already shown, is also founded on the incorrect translation of the words न देयः In regard to the character of the Report of the late Sadr Dewaní Adalat I would not constitute myself a critic, but it strikes me that if the Reports were badly selected, and even if the court was not "strongly constituted," those circumstances do not afford sufficient reason for overturning a course of decisions extending over at least fifty-nine years, a course too which was in conformity to the law and usages of the country as understood and expounded by former governments. There is no decision whereby the gift by C of the child of A and B without their knowledge or consent has ever been sanctioned by the courts or by the people, so far as can be ascertained. As regards the Vyavasthás mentioned at page 390 very little can be gathered from the extracts given.

The conclusion in regard to cases applicable to this side of India to which I have arrived on this subject may be well stated in the words of the last Full Bench decision of the High Court at Allahabad, from whose judgment in *Hanuman Tewari* v. *Chirai*, the following is an extract[2]:—

"The High Courts of Calcutta, Madras, and Bombay have all ruled in favour of the doctrine of *factum valet*. In the Calcutta Court Sir Edward Ryan, C. J., in delivering judgment in *Sreemutty Joymony Dossee* v. *Sreemutty Sibosoondry Dossee*, (1) said: The adoption of an only son is no doubt blameable by Hindu law, but when done it is valid. In Bombay the question was distinctly raised in the case of *Raje Vayankatrao Anandrao Nimbalkar* v. *Jayantrao*, (2) before Warden and Gibbs, J. J., who were both of opinion that the adoption of an only son having once taken place, and the requisite ceremonies having been duly performed, cannot be set aside. Gibbs, J., in delivering his judgment, said: The rulings of this Court, as shown from 2 Borr. p. 83, downwards, as also of the Calcutta Court, have been that an adoption once made cannot be set aside. If the adopted be not a proper person, the sin lies on the giver and receiver alone, but the adoption must stand. In the High Court of Madras the same doctrine was approved and applied in the case of *Chinna Gaundan* v. *Kumara Gaundan*, (3) before Scotland, C. J., and Frere, J. In delivering judgment, Scotland, C. J., went carefully through all the authorities, concluding thus: 'On the

[1] See the decision of Mr. Justice Prinsep in *Raghuba Nund Doss* v. *Sadhuchurn Doss*, 4 Indian Law Reports, Cal. series 431.

[2] Indian L. R. II. (Allah. Ser.) 164.

whole the case (*i.e.* the validity of such an adoption) is concluded by authority; but I must say, with all possible respect for Mr. Justice Strange, that upon principle and reason I should have felt myself bound to decide the point in the same way.' This appears to be the Madras case alluded to in the judgment of Mr. Justice Mitter in the Calcutta case I have referred to. In a subsequent Madras case, *Singamma* v. *Vinjamura Venkatacharlu*,(4) before Bittleston and Ellis, J. J., the law laid down by Scotland, C. J., was carefully considered and distinctly approved, and it appears to me to be sound and worthy of acceptance by us."

To the above, must be added the following most important observations of the Privy Council in *Srimati Uma Devi* v. *Gokoolanund Das Mahupatra* [1]:—

"It was urged at the Bar that the maxim '*Quod fieri non debuit factum valet*,' though adopted by the *Bengal* school, is not recognised by other schools, and notably by that of *Benares*. That it is not recognised by those schools in the same degree as in Bengal is undoubtedly true. But that it receives no application except in *Lower Bengal* is a proposition which is contradicted not only by the passage already cited from Sir *William Macnaughten's* work, but by decided cases. The High Court of *Madras* in *Chinna Gaundan* v. *Kumara Gaundan* and the High Court of *Bombay* in *Raje Vayankatrao Anandrao Nimbalkar* v. *Jayantrao bin ur Ranadivo* acted upon it; and did so in reference to the adoption of an only son of his natural father, on which the High Court of *Calcutta* in *Rajah Opundur Lall Ray* v. *Ranee Bromo Moyee* has refused to give effect to it, considering that particular prohibition to be imperative.

"Their Lordships feel that it could be highly objectionable on any but the strongest grounds to subject the natives of *India* in this matter to a rule more stringent than that enunciated by such text writers as Sir *William Macnaughten* and Sir *Thomas Strange*. Their treatises have long been treated as of high authority by the Courts of *India*, and to overrule the propositions in question might disturb many titles.

"Upon a careful review of the authorities their Lordships cannot find any which would constrain them to invalidate the adoption of the defendant, even if it were more clearly proved than it is that *Hullodhur Dass* could have adopted *Dinobundhoo*, the only son of his brother. They will, therefore, humbly advise Her Majesty to affirm the judgment of the High Court and to dismiss this appeal with costs."

In regard to an adoption of a sister's son and a daughter's son, I have room only for a few brief remarks. The cases of *Gopal Narhar Safray* v. *Hanmant Ganesh Safray and another*,[2] and *Bhagirthibai* v. *Radhabai*[3] decide that among Bráhmaṇas the adoption of a daughter's son is "incestuous and invalid," and cannot be supported on the doctrine of *factum valet*. These decisions are opposed to the unambiguous language of the Vyavahára Mayúkha and the Dvaita Nirṇaya on the

[1] Law Rep. In. Ap. 53.
[2] Ind. Law Rep., 3 Bombay Ser. 273.
[3] Id. 293.

subject. Their Lordships were probably misled by Mr. Borradaile's translation of the Mayúkha, for it is asserted that the Mayúkha prohibits such an adoption, whereas Nílakaṇṭha has taken particular pains to disprove the alleged prohibition. The passage has been entirely misunderstood. I refer my readers for a correct rendering of it to pp. 53, 54 above. As regards the Dattaka Mímámsá, the Dattaka Chandriká, and the Samskárakaustubha I have fully discussed their doctrines on the subject before. In reference to the extracts taken from the Vyavasthás, which are yet to be published, they do not displace my conclusions on the subject, and I regret they cannot be accepted in their present form until the original questions and replies and authorities are published. No earlier published case adverse to the right of the sister's son and the daughter's son is available, and the usage in this presidency being uniformly in accordance with the opinions of the Mayúkha, the effect of these decisions will, I fear, tend to upset titles and promote litigation. Only a few weeks ago a gentleman who, when questioned, admitted that the law and usage of the country was in favour of the adoption of daughter's sons, sought for precedents against the validity of such adoptions in the shape of some new decisions, which, he was told, had been passed. The effect of such decisions may, therefore, be easily conceived. It seems that in neither case was it brought to the notice of their Lordships that both Nílakaṇṭha and Śankara Bhaṭṭa have plainly stated that the immemorial usage of the country was in favour of such adoptions. It was not proper to have drawn any inference from the 'admission' of the learned pleader that no instances of the adoption of a daughter's son in the locality of the litigants were deposed to in the case. No issue about such custom was, it seems, raised in the lower courts; and any remarks of the court as to the likelihood of the existence of that custom can therefore have no judicial force. A document containing the recognition of an adoption of the kind by one of the Śankarácháryas is set aside on the ground that the law had neither invested him with 'any dispensing or judicial power,' nor was he agreed to as an arbitrator. What *law* is here meant I do not know. The jurisdiction of Śankaráchárya over Smártas in matters of religion is independent of any consent of the parties.[1] Adoption is to a considerable extent a matter of religion, and the decision by a Śankaráchárya that a certain adoption is valid and not sinful has been and is still regarded by the community as final. With the greatest deference I must observe that that authority has better means than our present courts of knowing the accepted law and usages of the people; and our civil courts ought not to undertake to reject an adoption on the ground of its sinfulness, when such adoption has been declared by the Śankaráchárya not to be sinful.

[1] See Steele's Summary p. 88.

My previous remarks on the essential constituents of an adoption, together with those on the doctrine of *factum valet*, apply to adoptions of a sister's son and a daughter's son alike. There being a proper giver and receiver, and a gift and acceptance, the adoption must stand even on the imperfect doctrines of Dattaka Chandriká and Dattaka Mímámsá.

I now beg to add that from an extract of the *Dattápradánika* Section of the Smṛiti Chandriká with which I was lately favored by Dr. Burnell, I am fortified in my conclusion that the printed Dattaka Chandriká is not the work of Devaṇṇa-bhaṭṭa.

---

## CONCLUDING REMARKS.

The following are subjects upon which I have yet to publish my observations, on the texts as well as the customary law in relation thereto. My time and space being limited, I am not able to do so in this work, and must therefore content myself with a bare enumeration thereof:—

I. Partition—

- (*a*) Evidence of.
- (*b*) Impartible property.
- (*c*) Primogeniture.
- (*d*) Eldership.
- (*e*) Mother's share.
- (*f*) Charges on ancestral property—such as marriages, debt, *Maháyátrá* (great pilgrimage)—expenses, maintenance, &c.
- (*g*) Gifts of ornaments to female relations.

II. Succession—

- (*a*) Ordinary property.
- (*b*) Offices—1, Temporal; 2, Religious.
- (*c*) Stridhana.
- (*d*) The doctrines of vesting and survivorship—are they applicable to the Hindu law?

III. Alienation—

- (*a*) Sales.
- (*b*) Gifts.
- (*c*) Mortgages.

---

# INDEX TO PRINCIPAL MATTERS.


PAGE

Abettors—who? ..... 145
——— of offences, punishment for ... 144
——— of heinous offences, punishment for ..... 148
Abuse—a title of legal procedure ..... 2
——— defined ..... 137
——— three degrees of ..... 137
——— punishment for, in various cases 137
——— punishment for, varying with the caste of the culprit .....138, 238
Acceptance (*Labdham*)—a mode of acquisition peculiar to Bráhmanas ..... 34
Áchárádhyáya .....157, 200
Acquiescence in the enjoyment by another of one's moveable property for ten years, effect of ..... 22
——— in the enjoyment by another of one's immoveable property for twenty years, effect of... 22
Acquisition—modes of ..... 32
Acquittance from payment of debt ... 111
Ádhivedanika ..... 91
Adhyagni ..... 91
Adhyávahanika..... 91
Adopted son—definition of..... 50
Adoption .....
——— its antiquity ..... 454
——— of daughters ..... 455
——— of many sons ..... 455
——— of self-given sons ..... 454
——— not obligatory..... 460
——— by whom to be made..... 462
——— who can give in ..... 469
——— who may be given ..... 479
——— form of..... 510
——— power of, not restricted to Brahmans ..... 36
——— mode of ..... 52
——— object of ..... 57
——— the ceremony of..... 57, 63, 65

PAGE

Adoption, Sapinda—relationship arising through..... 353
——— of brother's son chiefly ..... 57
——— of unremote kinsmen of the same class as adopter..... 57
——— whether he may be a married man ..... 58
Adultery—the fifteenth title of Vyavahára .....2, 241, 242
——— ordeal in case of..... 16
——— with preceptor's wife..... 25
——— witnesses in case of ..... 25
——— what ..... 149
——— punishment for, proportioned to the caste to which the woman belongs ..... 149
——— punishments for .....149, 152
——— coupled with rape ..... 146
——— woman's punishment for, half of that inflicted on man. 150, 242
——— brought about by mutual desire, punishment for ..... 150
——— proof of, defined .....152, 242
——— evidence of..... 152, 241, 242
Affray—witnesses in case of ..... 25
Agent—in legal matters ..... 8
——— where not permitted ..... 8
——— where permitted ..... 8
Alienable property—what?..... 122
Amátya (councillor)—who should be made an? ..... 3
Ancestral property ought to be equally divided between father and son ... 43
Aṅgiras, remarks on his Smṛiti..... 293
——— works attributed to ..... 292
Aṅgirahproktasmṛiti—remarks on..... 293
ÁṅgirasásmṛitiDharmaśástra—remarks on ..... 293
Aniyuktas (honorary officers of justice). 3
Annaprášana—ceremony of ..... 161
Answer—definition of an ..... 10
——— four kinds of ..... 11

PAGE

Answer—nature of an improper ..... 11
Antelope, black, sacred character of...158n.
Anuloma ..... 157n.
Anvádheyaka ..... 92
Ápastambasmṛiti—analysis of ....., 298
Ápastamba—priority of, in time, to Aṅgiras ..... 299
——— the age of ..... 300
——— opposed to female succession 357
——— cited ..... 83, 156
Apaviddha (deserted son)..... 49
Appointed daughter considered a son... 49
Apratibandhadáya—what ?..... 37
Áraṇyaka ..... 254
Áryan society, in what sense stationary and in what progressive..... xliii
Áryans, intermixture of, with non-Áryans ..... 431, 432
Áryas—the term determined ..... iii
——— antiquity of the four classes of iii
——— division of, into four classes ... vi
Áryávarta—limits determined .....iii—vi
Ascetics—succession to the property of. 83
——— duties of ..... 250, 262
Assault defined ..... 139, 233
———a title of legal procedure..... 2
———punishments for different kinds of ..... 140, 233
———degrees of, defined ..... 139, 233
——— enumeration of..... 140, 233
Assessors (*Sabhyas*)—who should be made? ..... 3
Associations of trades—what? ..... 130
Áśvaláyana cited ..... 74
Atíkrichchhra—what is? ..... 272
Atrisaṁhitá—composition of, and remarks on ..... 276
Atri—chronology and parentage of ... 278
*Aurasa* son ..... 49
Aušanasadharmaśástra—remarks on ... 289
Aušanasasmṛiti, an analysis of... 289, 290
——————— remarks on..... 290, 291
——————— dharmaśástra, analysis of..... 291, 292
Bandhus—three kinds of ..... 82
——— succeed to obstructed *dáya*, when ? ..... 82
Bhágavata..... 42
Bháshyakáras, period of ..... xliii
Bhavaṇátha ..... 31

PAGE

Bhoga (usury);—a mode of acquisition peculiar to the Vaiśyas ..... 35
Bhṛigu referred to ..... 68, 109, 114
Bhṛiti—a mode of acquisition peculiar to the Śúdras ..... 35
Boundary—mode of defining..... 134
——— ordeal in a dispute of ...134, 226
——— dispute, punishment for false evidence in the case of a . 135
——— to be settled by the king personally in the absence of evidence ..... 135
——— fine for transgressing a ..... 136
——— fine for the seizure of a, by intimidation ..... 136
——— rights in the produce of a, defined..... 137
Brahmacharya, two kinds of ..... 163
Bráhmaṇa—exempt from capital punishment ..... 145
——— penance for the murder of. 215
——— learned in law may represent a king in the office of the judge... 201
Breach of service contract .....124, 229
Bribe..... 124
—— once given can be restored by law. 124
—— payment of, cannot be enforced by law ..... 124
Bride—qualities required in a ..... 167
Brides, number of, prohibited on account of *Sapiṇḍa* relationship..... 347
Bridges—erection of, when allowed on the soil of another ..... 137
——— repair of, gives no title to the repairer against the owner ..... 137
Bṛihaspati, pedigree, &c. of.....305, 306
——— cited .....2, 3, 5, 8, 13, 16, 17, 19, 21, 23, 25, 26, 29, 30, 39, 40, 46, 47, 48, 68, 69, 70, 71, 75, 76, 77, 81, 83, 84, 85, 88, 90, 102, 104, 105, 106, 107, 108, 109, 110, 112, 113, 114, 115, 116, 118, 119, 121, 123, 128, 129, 130, 131, 134, 135, 136, 137, 138, 139, 142, 143, 145, 146, 147, 148, 149, 151
Bṛihaspatismṛiti—contents of, and remarks on ..... 304, 305
Bṛihat—a prefix to the names of Smṛiti writers ..... xxii

PAGE

Bṛihat-Manu ..... 62
Bṛihatparáśara Saṁhitá—analysis of 308,310
Brother—succession of ... ..... 80
Brother's son—succession of..... 80
Burden of proof .....11, 12
Capital punishment when to be resorted to and when not..... 144
———— not to be inflicted without the sanction of king..... 149
Castes, four ..... 157n., 161
——— mode of the rise in ..... 173
——— origin of ..... 256
Cattle, enjoyment of, without owner's permission ..... 119
Cattle-stealing, punishment for..... 143
Ceremonies, divisions of, according to *Prayoga* writers ... ..... xxx
Chándráyaṇa ..... 273
Charges on inheritance .....?..... 66
Children not subjects of ownership ...35, 37
Civil judicature or Vyavahára..... 201, 244
Claim—a suitor with an inadmissible ..... 15
——— priority among numerous claims. 111
———falsely denied, punishment in case of ..... 202
——— falsely advanced, punishment in the case of ..... 202
Cohabitation with wife, time ordained for .....171, 172
Company's funds, embezzlement of, by a member ..... 130
Compound interest when allowed ..... 110
Confession or admission—answer of ... 71
Confession of the crime of abuse, mitigation of punishment in case of ... 139
Concealment of effects on partition, fresh division in case of ..... 72
Concerns among partners ..... 121
Conqueror—limited rights of, in the soil of the conquered .....34, 35
Conquest—a mode of acquisition, peculiar to Kshatriyas.....a..... 34
Contracts for workmen, rules regarding 117
Councillor (*Amátya*)—who should be made a ..... 3
Court-house —construction of the ... 2
Creation—theory of the .....251, 252
Creditor—heirs of, can recover ..... 114

PAGE

Creditor in default of, who are to recover debt ..... 115
Crime, unnatural ..... 152
Criminal charges, defence to be given in case of ..... 202
Criminal conversation with a woman, punishment for..... 149
Cruelty to animals—punishable..... 141
Customs (ancient)—should be preserved intact ..... 5
Daksha—cited .....122, 125
Dakshasaṁhitá, an analysis of ..... 316
———— antiquity of ..... 317
Dána (gift), six essentials of ..... 159
——— a part of Dharma .....xxxv
Dattaka (adopted son)..... 49
——— the only one of the secondary sons, recognized in Kali ... 50
——— two sorts of, Kevala and Dvyámushyáyaṇa .....58, 59
——— *Kevala* :—can perform the obsequial rites of the adopter only ..... 58
——— (*Kevala*)—cannot inherit natural father's property..... 59
——— (*Kevala*)—retains the Sapiṇda relationship with the natural father's family up to seven degrees ..... 61
——— Chandriká, remarks on .....lxxiii
——— Mímámsá, remarks on ..... lxxii
——— Darpaṇa ..... 485
——— Mañjarí ..... 485
——— Nirṇaya..... 485
——— Laugákshi Bháskara..... 485
Daughter—succession of..... 79
————depends on chastity... 370
Daughter-in-law whether capable of inheriting ..... 370
Daughter's son, succession of ..... 79
——— can be adopted by a Bráhmaṇa ..... 54—56
——— a Súdra should adopt, wherever possible .....53, 55
Dáya (heritage)—various definitions of 37
—— (Sapratibandha) ..... 37
—— (Apratibandha) ..... 37
Dáyabhága, definition of..... 38
Debt (ancestral) to be divided along with *Dáya* .....65, 66

PAGE

Debt—rule with regard to recovery of. 109
——, rules for enforcing the means of, recovering ..... 109
——security when to be taken for the recovery of ..... 109
—— mode of exacting the payment of, when acknowledged ..... 110
—— when not wickedly repaid..... 111
—— sons and grandsons when liable for..... 112
—— share of, how proportioned ..... 112
—— when not recoverable from sons .. 113
—— order of those responsible for a man's debt ..... 113
—— contracted for the use of a family, binding on the head of the family. 114
Debtor appealing to justice, punishment for a creditor harassing such a debtor..... 10
Debtor and creditor, law regulating the relation between ..... 205
Decisions of suits to be based on the nature of things ..... 203
Dedication of groves ..... 338
——— of serais, &c..... 332
——— of tanks..... 332
——— of temples..... 332
Dedicator's rights in property dedicated ..... 337
Dedicated temples, &c. repairs of ..... 340
Defence, hearing of .....201, 202
Degraded (the)—abandonment of ..... 270
Denial—answer of ..... 11
——— four kinds of ..... 11
Deposit, two kinds of .....115, 207
——— preservation and restoration of, compulsory ..... 115
——— rule in case of damage to or loss of ..... 116
——— interest on, when enforced .. 116
——— rule in case of use of..... 116
——— exemption from damages, when deposit is destroyed by the act of God or king..... 116
Deposit—punishment for fraud connected with ..... 116
——— re-delivery of, to the heirs of the depositor..... 116
——— rule with regard to, applicable to all species of bailments ... 117

PAGE

Deposit, compensation for, in certain cases of loss ..... 117
Deposited cloth—rate of valuation for..... 117
Deposited metal—rate of valuation for..... 117
Descendants beyond great-grandson and up to the seventh remove —when entitled to partition ..... 46
Destiny—what is ? ..... 199
Devala..... 33, 42, 45, 46, 92
Dhareśvaráchárya ..... 32
Dharma—sources of ..... 159
——— pre-eminent sort of ..... 160
Dharmádhicaraṇam (court-house)—definition of ..... 3
Dharmapravṛitti quoted ..... 74
Dharmaśálá—mode for the renunciation of..... 335
Dharmaśástra—meaning of the term, explained..... i
——— sources of—Tantras ..... xli
——— sources of—Pañcharátras . xlii
——— sources of—usage or custom..... xliii
——— lists of work on ..... lix
Dharma-Sútras—list of ..... xii
Dhátus—sensible and spiritual..... 257
Dhvajáhṛita (gains by valour)—when partible and when impartible..... 69
Diplomacy—different modes of..... 199
Dispute between master and herdsman. 132
Divorce—sanctioned by usage.....428, 431
——— not known to Smṛiti..... 428
——— regulated by custom .....434, 437
Documents—when allowed to be renewed ..... 20
——— when their contents are receivable..... 20
Documentary evidence,—law with regard to .....209, 210
Dravya—meaning of ..... 43
Drinking—penance for ..... 266
Duties under distress ..... 248
——— of a hermit ..... 249
——— of a yati ..... 250
Dvaitanirṇaya—alluded to ..... 54
Dvyámushyáyaṇa—definition of ..... 58
——— rights and obligations of a.....60, 62

PAGE

Dvyámushyáyaṇa—performs obsequial rites and inherits the properties of both the natural and the adoptive father ... 61
Dvijas—who are? ... 161
——— rites and ceremonies peculiar to ... 161
——— why so called? ... 165
Earth—origin of ... 256
Emancipation—rite of ... 127
Equity (*Nyáya*)—to be followed when two Smritis disagree ... 5, 203
Escheated property, the share of, to be reserved by the king, when the owner claims it ... 120
——— term for the restoration of ... 119
Evidence, nature of ... 15
——— four kinds of ... 15
——— by possession ... 15
——— by deeds ... 15
——— by witnesses ... 15
——— objection to the receipt of ... 25
——— proceedings on objections to the receipt of ... 26
——— test of ... 29
——— limit to the receipt of ... 30
——— punishment for refusing to give ... 29
——— of partition ... 73, 76
——— in case of pledges, &c. ... 203
——— in case of money disputes ... 203
——— species of ... 203
Examination of articles bought—term allowed for the ... 131
Exclusion from inheritance ... 99, 102, 223
Exemption from birth and death, means of obtaining ... 258
Expiations—when to be performed in secret ... 271
Father's power, circumstances invalidating ... 40
——— in case of father's incompetency, the competent son is to manage ... 40
Felonious Bráhmaṇa—does he deserve to be capitally punished? ... 146
Felons enumerated ... 146

PAGE

Females, succession of, not based on *sapiṇḍa* relationship, but on special texts ... 357
——— succession of, opposed by Haradatta ... 357
——— succession of, opposed as a rule to Hindu law ... 365
——— certain, entitled to succeed, number of ... 365
——— Gotraja sapiṇḍas who can inherit ... 366, 377
——— reasons for the disqualification of, to succeed ... 366
——— ancestors (six lineal) capable of inheriting ... 270
Food—what forbidden? ... 183
Fornication—considered with reference to classes ... 150
——— when allowable and when not ... 152
Fraud in partition—fresh partition in case of ... 66
——— with the creditor—moral effect of 111
Fraudulent borrower, punishment of ... 118
——— gift to be annulled ... 124
——— sale—punishment for ... 132
Fraudulently enjoying a married woman—punishment for ... 149
Gálava ... 164
Gambling and prize-fighting ... 231
Gaṇapati—worship of ... 193
Garbhádhána ... 161
Gifts from father and the like, impartibility of ... 69
——— of alienable property—when prohibited ... 123
——— by lunatic, &c. void ... 124
——— valid ... 123
——— void ... 123
——— from whom not to be received ... 179
——— from whom may be taken ... 185
——— (religious) various modes of ... 186
——— for religious purposes, nature and purpose of, in primitive times ... 333
Gautama ... 32, 39, 47, 61, 62, 63, 68, 70, 72, 79, 83, 88, 123, 150
——— works ascribed to ... 317
——— priority of, in time to Bhṛigu, the compiler of Manu's institutes. 319

PAGE

Gautamas (several) mentioned in the Mahábhárata and other works..... 323
Gautama Saṁhita—analysis of .....317, 31
Gold—penance for theft of ..... 266
Gotraja Sapiṇḍas..... 81
——— succession of, to the property of a sonless man ..... 81
——— females who can inherit..... 366, 377
——— females, who cannot inherit..... 366, 377
——— (male) order in which they inherit ..... 377
Gotrajás—succession of ..... 361
Grahas—propitiatory rites for ..... 195
Grandmother (paternal) succession of. 81
——— share of, on partition ... 44
Grihya Sútras—a list of commentaries on ..... xii
Gúdhaja (son of hidden origin)..... 49
Hárita... 12, 13, 21, 22, 33, 40, 44, 77, 79, 105
Hárita Dharmaśástra, remarks on..... 288
Heaven—origin of ..... 256
Hells—enumerated ..... 263
Herdsman—disputes between master and the ..... 133
Heritage (Riktha or Dáya) determination of .....31, 37
——— defined..... 32
——— two kinds of ..... 37
——— (Dáya) various definitions of ..... 37
——— partition of ..... 38, 212, 225
Hermit—heirs to the property of a ... 222
Highway ..... 136
Hindu law defined ..... i
——— misapprehended and misapplied ..... ii
——— the sources of ..... iv
——— as a general rule opposed to the succession of females ..... 365
Hindu lawgivers .....xiii—xv
Hire of carriages, &c.—rules relating to ..... 129
Householder—duties of ..... 174
Human body, structure and creation of .....252, 254
Illegitimate son, share of ..... 220

PAGE

Impartible property .....66—72
(1) Gains by learning without detriment to ancestral wealth.
(2) Gifts made through affection.
(3) Mádhuparkika.
(4) Saudáyika.
(5) Kanyágata.
(6) Pasture land.
(7) Wells.
(8) Religious land, &c.
Impurities on account of births and deaths .....246—248
Incest..... 151
Inheritance—charges on, initiation of brothers..... 48
——— marriage of sisters ..... 49
——— ancestral debt .....65, 66
Interest on debt recovered ..... 29
——— when husband consumes wife's stridhana ..... 90
——— in case of sellers and travellers 103
——— where negatived ..... 103
——— on loans ..... 103
——— in case of non-delivery of goods ..... 103
——— stipulation with regard to, when necessary ..... 103
——— rate of..... 103, 204
——— when due without stipulation ..... 103
——— time when it begins ..... 103
——— limitation of accumulation by..... 104
——— where demanded ..... 104
——— in case of *śúdras* ..... 104
——— accumulation, by specified ... 104
——— not allowed where a deposit is used..... 105
——— utmost legal limit of the increase of ..... 204
——— rate of ..... 204
Intermarriage between the first three classes..... 168
———between whom allowed. 347, 356
Ishṭa defined ..... 333
Játakarman, what? ..... 161
Jírnoddhára, what?..... 340
——— on whom incumbent? ... 340
——— the ceremony of ..... 343
Judge (Prádviváka), definition of .....

PAGE

Judicial proceeding (Vyavahára)—definition of ..... 201
Justice—officers of ..... 4
——— partiality in the administration of, to be punished ..... 201
Káliká Puráṇa—quoted ..... 58
Kalpasútras—place of, in the Hindu Law ..... xxx
Kánína (unmarried woman's son)..... 49
Kanyágata wealth—nature of—impartibility of ..... 70
Kárshṇájini—quoted ..... 60
Kátyáyana Smṛiti—divisions and subdivisions of ...302, 303
———————remarks on ...303-304
Kátyáyana.....quoted at pages 3, 4, 6, 7, 8, 9, 10, 11, 14, 15, 16, 17, 21, 22, 23, 25, 26, 27, 30, 31, 43, 44, 57, 59, 60, 65, 66, 67, 68, 69, 72, 77, 78, 79, 80, 83, 92, 93, 102, 103, 104, 105, 106, 107, 108, 109, 110, 111, 112, 114, 115, 116, 117, 118, 119, 121, 127, 129, 131, 134, 135, 136, 139, 145, 146, 148, 150
Kidnapping—punishment for..... 143
King—duties of .....196, 200
Knowledge—fourteen sources of ..... 158
Kṛichchhrátikṛichchhra—what? ..... 272
Kṛita son ..... 49
Kṛitrima (self-made son) ..... 49
Kshetraja (son of the wife)..... 49
Kulas—justice administered by ..... 4
Kusída (usury) etymology of ..... 102
Labdham (acceptance): a mode of acquisition peculiar to Bráhmaṇas. 34
Labour—what kind of, allowable ..... 125
————what kind of, not allowable... 125
Laghu-Hárita-smṛiti—an alalysis of. and remarks on ..... 283
Laghuvishṇudharmaśástra— remarks on .....282, 283
Laghuvyásá Smṛiti—remarks on ..... 311
Laghvatri Samhita—the contents of and remarks on..... 276
Laugákshi ..... 71
Land—enjoyment of without owner's leave ..... 119
——— held by lease—punishment for not allowing it to be cultivated ... 137
Landlord and tenants—law of ..... 129

PAGE

Lawgivers (Hindu) .....xiii—xvi, 158
Lawgiving assembly ..... 160
Legal procedure—fourfold character of 13
Legal proceedings—time for conducting..... 4
Legal promises binding on heirs ..... 124
Likhita ..... 42
Likhita-Samhita—remarks on ..... 315
Limitation of time—in the case of real and personal property..... 203
Loan—interest on ..... 102
—— rule with regard to the making of 102
Lost articles—how to be disposed of by the king when he finds it. 204
———— property in, to be proved by the respective owners of ..... 118
———— the first owner of, recovers even if purchaser proves public sale of it. 191
———— remuneration to the finder of ..... 120
Madana .....quoted at pages 33, 43, 50, 85, 86, 90, 148
Madanaratna .....1, 47
Mádhava ..... 57
Mádhuparkika wealth—impartibility of 66
Mahábhárata—superiority of, over other Puráṇas ..... xxx
Mahásántapana—what is? ..... 272
Manu .....quoted at pages 2, 3, 6, 25, 27, 28, 29, 30, 38, 39, 41, 42, 46, 50, 51, 58, 59, 61, 63, 66, 67, 70, 72, 75, 76, 77, 78, 79, 81, 82, 85, 86, 88, 91, 93, 104, 105, 110, 116, 119, 120, 122, 124, 125, 128, 133, 135, 138, 140, 141, 143, 144, 146, 148, 149, 150, 154, 155
——remarks on .....xlvi—xlviii
Manufactures, remarks on the valuation of ..... 117
Maríchi ..... 119
Marriage—who can give a girl in ..... 161
———— several forms of .....168—169
———— tie, early looseness of .....395
———— anomalous state of early law ..... 396
———— usages set aside as immoral ..... 396

PAGE

Marriage (see Polyandry and Niyoga) . 397
——— customs, with regard to..... 400
——— Vedic time, customs with regard to..... 400
——— innovations on the early simple rituals ..... 401
——— simplicity of the Vedic marriage ritual ..... 400
——— modern rituals ..... 402
——— regulated by caste, family, country and village customs..... 404
——— ritual applicable to the highest caste ..... 404
——— not applicable to lower castes 404
——— various provincial customs about ..... 404
——— restrictions imposed on Árya 409
——— supersession of text law by new usages ..... 413
——— Pratyudváha—sanctioned by usage ..... 414
——— of two sisters and two brothers respectively—sanctioned by usage ..... 415
——— of one person with two sisters ..... 415
——— Viruddha Sambandha ..... 415
——— with the daughter of a maternal uncle..... 415
——— with sister's daughter sanctioned ..... 425
——— of the impotent, &c. ..... 427
——— divorce..... 428
——— of Śúdras and Atiśúdras ... 433
——— who mayintermarry..... 347, 356
——— forbidden affinities..... 347
Marriage customs in different parts of India ..... 441—454
——— West Berar..... 441
——— Bombay ..... 444
——— Central Provinces... 443
——— Madras Presidency. 445
——— North of the Narbada (Narmadá) ..... 449
——— North Western Provinces ..... 453
——— Rájputáná ..... 453
Marriages and divorces as regulated by custom..... 434—437

PAGE

Master and herdsman—law with regard to ..... 132, 134, 227
Master—Rules binding on, with regard to servant..... 128
———liability of, for the act of the servant ..... 129
Mayakalpa—a treatise on architecture, notices of ..... 342
Medhátithi—cited ..... 51
Mímámsá (Púrva)..... 35, 37
Mitákshará of Vijñáneśvara..... 44, 120, 138, 146, 154, 155
———estimate of the real importance of..... lxx
———of Haradatta..... 318
Mixed castes..... 178
Monogamy—whether the most approved form in early times..... 398
Mother—share of, on partition between a father and sons..... 43
——— share of, on partition between sons, after the death of the father 44
Mothers of the same class—partition according to, when allowed..... 46
Mutilation—not to be inflicted without the king's sanction ..... 149
——— to be inflicted upon woman, where man deserves death..... 150
Murderers—how to be determined when a man dies under the effect of beating by several..... 145
Music—importance of the knowledge of, in knowing the soul ..... 255
Námakaraṇa—what is? ..... 161
Nárada..... 5, 6, 7, 8, 10, 13, 15, 20—22, 24, 25, 27, 28, 29, 35, 38—40, 42, 43, 63, 66, 68, 69, 73, 75, 76, 78, 83, 89, 103—106, 110, 112, 114—119, 121—132, 134—141, 143—145, 148, 151, 152, 156
Nibandhas—remarks on..... lix
——— period of..... xliii
——— the author of the Vyavahára Mayúkha ..... lxxiv
Nílakaṇṭha—history of ..... lxxix
——— on the utsarga of trees, &c. 338
Nirṇayasindhu—an extract from, prescribing ceremonies for utsarga... 337
Nishkramaṇa... ..... 161
Niyamas—what are? ..... 272

PAGE

Niyoga—what is? ..... 170
——— formerly allowed ..... 395
Niyuktas—(paid officers of justice) ... 3
Nuisances not to be erected in the vicinity of a house, &c..... 135
——— fine for, when committed in a thoroughfare..... ..... 136
Nyáya (equity)—to be followed when two Smṛitis disagree ..... 5
Oath—different forms of, peculiar to different castes..... 30
—— manner of tendering ..... 28
—— (false) how to be known ..... 31
Obsequies of the deceased .....245, 246
Obstructed heritage—order of succession to .....76—84
Obstructed heritage—well behaved wife first succeeds to 77—79
——— 2ndly, daughters succeed to..... 79
——— when it goes to Bráhmaṇas ..... 83
Offences—heinous, defined .....144, 235
——— enumerated ..... 145
——— degrees of ..... 145
——— when punishable with capital punishment..... 145
——— punishments for heinous offences ..... 148
Officers of justice—respective duties of. 4
1—president.
2—king.
3—assessor.
4—accountant.
5—scribe.
Ordeals (Kosa)—where the use of, is optional.....16, 210—212
——— where preferred to other modes of evidence ..... 16
——— trial by, in the absence of witnesses or writings ..... 20
——— to be resorted to in case of suspicion of concealment of effects on partition..... 66
——— use of, in case of absence of all evidence of partition ..... 75
——— in the case of a boundary dispute ..... 134
Ownership—the exact idea of, explained .....31—36

PAGE

Ownership—death of the previous owner is the cause of, according to Jímútaváhan... 32
——— definition of, according to Jímútaváhana ..... 31
——— proved as arising from the manner of the world's dealing, and not from the Śástra ..... 32—36
——— of a man in hereditary property arises with his birth, and not by the death of the last occupant, nor by means of partition ..... 32, 34
Páḍakṛichchhra ..... 272
Pancharátras—a source of Dharmaśástra .....xliii
Paráśara ..... 56
——— the last Smṛiti writer ..... lxiii
——— works attributed to ..... 306
Paráśara's works—remarks on ...310, 311
Paráśara Smṛiti—an analysis of..... 307
Parents—power of, to give, sell, or abandon son..... 57
——— succession of ..... 81
Puṛṇakṛichchhra—what? ..... 272
Partition—simply defines undefined ownership, but does not create it ..... 34
——— of Dáya—what?..... 38
——— time of, in case of property acquired by father .....38, 39, 40, 214
——— time of, in case of the ancestral property .....38, 39, 40, 214
1—Death of the father.
2—Ceasing of the mother's monthly course.
3—Father losing sensual desire.
4—Father behaving immorally.
5—Father desiring.
6—Sons desiring.
——— may take place without the existence of property ..... 38
——— definition of, according to Jímútaváhana ..... 38
——— definition of, according to Vijñáneśvara, and Víramitrodaya ..... 38

PAGE

Partition, time of, in the case of the Stridhana of the mother ... 39
——— mode of ..... 40, 218
——— voluntary ..... 40
——— as dependent on the will of the father ..... 41
——— unequal ..... 41
——— by deduction obsolete in the Kali age ..... 42
——— equal, after the death of the father ..... 44
——— among sons of several brothers 44
——— stops at great grandson ..... 45
——— among brothers, nephews, and grandnephews ..... 45
——— according to mothers when allowed ..... 46
——— mode of, among sons by different classes ..... 46, 218
——— time of, among brothers ... 48
——— to be made afresh in case of concealment of effects... 72, 73
——— fresh in case of recovery of stolen or lost goods ..... 73
Partners—mutual obligations of ..... 121
——— provision for reward and punishment of ..... 121
——— are to bear losses in common ..... 122
Partnership—order of shares in a.. 121, 239
Paternal estate, father's consent not necessary to the partition of ..... 39
——— periods of the partition of ..... 39
1—Father's death.
2—Mother past child-bearing.
3—Father's consent.
Paternal grandfather—succession of ... 81
Pasture lands of township—what ..... 133
——— ground, impartibility of ..... 71
Paunarbhava (son of a twice-married woman) ..... 49, 50
Perjury, subornation of ..... 27
Pitámaha—cited ..... 8, 16
Plaint—correction of ..... 9
——— requisites of a good plaint ..... 9
——— nature of a ..... 9
——— nature of inadmissible plaints ... 10
——— when allowed to be amended ..... 10

PAGE

Plaint—false ..... 15
——— how to be received ..... 201
——— hearing of ..... 201—202
Plaintiff—false ..... 202
Plea of former judgment ..... 11
Pleadings—commencement of ..... 8, 9
Pledge—writing of ..... 19
——— possession gives no title to ... 24
——— exemplified ..... 102, 206, 207
——— when renewed by the pawner... 105
——— what ..... 105
——— kinds of ..... 105
——— responsibility of pawnee with regard to, in case of damage. 105
——— rules for the custody of ..... 105
——— forms of ..... 105
——— to be disposed of by the pawnee after lapse of the term ..... 106
——— liability of the pawner in case pawnee incurs damage on account of ..... 106
——— effect of pawnee's loss or destruction of ..... 106
——— of the same thing to two creditors ..... 106, 107
——— lost when principal doubled ... 107
——— redemption of ..... 107
——— encroachment upon—how to be punished ..... 203
Polyandry, its existence among non-Áryan races ..... 396
——— doubts as to its existence among Áryans ..... 397, 399
——— evidence of it among early writers ..... 399
Polygamy not the universal or original law ..... 406
——— now almost universal ..... 406
——— prohibited by custom in certain castes ..... 406
——— entitles the first wife to obtain divorce, in certain districts... 407
Popular assemblies—*Kulas* ..... 4
——— bodies—king ought to consult ..... 200, 204
Possession—how it constitutes title ... 21
——— evidence by ..... 21
——— invalid ..... 22
——— evidence of, in certain boundary disputes ..... 135

PAGE

Possession when important, as establishing ownership ..... 203
Posthumous sons, born after partition —rights of ..... 48
Prádviváka—(judge), definition of ..... 2
Prajápati .....21, 42, 78, 115
Prájápatya—what? ..... 272
Pratiloma—meaning of the term...47, 157
——— sons entitled to maintenance only ..... 47
Pratishṭhá—what? .....335, 339
——— mode of ..... 335
——— the ceremonials of ..... 339
Pratyudváha—sanctioned by usage ... 414
Práyaschittas ..... xxxix
Práyaschitthádhyáya .....245—274
Prayoga works, a list of ..... xii
Prayoga párijáta ..... 54
Prayogas—what are? ..... xii
Prítidatta ..... 91
Professional men, reference to ..... 6
Proof—order of ..... 13
Property, without an heir to inherit, how to be disposed of..... 83
——— inalienable ..... 122
——— gift of, inalienable property void ..... 122
——— endowed for religious purposes, resumption of ..... 331
——— endowed for religious purposes, superintendence of.....331, 332
——— dedicated—the repair and control of ..... 337
Public charities—the appendix on. 331—344
——— a list of Sanscrit works on the subject of ..... 341
Púgás—justice administered by..... 4
Punarbhu—what? ..... 170
Punishments, three kinds of ..... 200
Punsavana, what ? ..... 161
Puráṇas—place of, in the legislature of the Hindus ..... xxx
——— distinguished as *Mukhya* and *Upa* ..... xxviii
——— number of ..... xxix
——— alluded to in the Vedás ..... xxx
Purification of things ..... 185
——— various modes of..... 185
Purchase—circumstances invalidating 11—8

PAGE

Purchased article—when compelled to be taken back by the vendor..... 131
Purchaser of a stolen or lost article —acquittal of, when the seller is produced..... 118
——— proceedings when he fails to produce the vendor..... 119
——— time ought to be given to produce the vendor..... 119
Púrta—defined ..... 333
Putrikásuta (son of appointed daughter) two kinds of..... 49
Rape—punishment for ..... 148
Rayishing—expiations for a woman ... 148
Rebailment—rule in case of ..... 106
Receipts of debts..... 111
Recovered paternal estate—full power of the recoverer over ..... 40
Recovery of debts .....102, 204
Recrimination—when allowed ..... 13
Religious law—to be preferred when it conflicts with moral law..... 5
Representative bodies..... 4
Rescission of sale—what is ? ..... 131
Rescission of purchase ..... 229
Restraint (legal)—four kinds of ..... 6
——— punishment for the trangression of..... 6
——— those who are exempted from..... 7
Resumption of gift—what?..... 122, 228
Reunion—effect of, on son born before partition ..... 47
Reunion—what ? ..... 84
——— doctrine of Mitákshará as to. 84
——— persons with whom it may take place..... 84
——— order of succession to one dying after ..... 84, 91, 223
——— division of self-acquisition after..... 85
——— equality of shares on partition subsequent to ..... 85
——— reunited wife ..... 87
——— concealed wealth taken by parceners after ..... 88
——— reunited son preferred to the unreunited ..... 89
——— son of reunited father..... 89
——— rights of parents, &c. after..... 89

PAGE

Reunion—brothers not reunited share with reunited uncles ..... 89
——— unreunited son preferred to reunited uncle ..... 89
Riktha (heritage)—definition of..... 32
Robbery—punishment for robbing grains of various kinds ... 144
——— estimation of articles subject to. 147
——— of articles—proportionate punishment for ..... 147
Rogues—enumeration of ..... 141
Royal establishment..... 130
Royal orders ..... 19
Royal writings of gift ..... 19
——————— of favour ..... 19
——————— decrees..... 19
——————— execution of..... 19
——————— private correspondence of kings..... 19
Sabhyas (assessors)—who should be made? ..... 3
Sadáchára—what is? ..... 160n.
Sádhyapála ..... 4
Sahodhaja ..... 49
Sale without ownership—what? ...118, 228
—— unauthorised, of gift or pledge, void at law ..... 118
—— rule with regard to the publicity of ..... 119
—— of alienable property—when prohibited ..... 123
—— void, described ..... 132
—— without ownership..... 228
Śánti ..... xxxii
Samánodakas—what?..... 82
Samskáras ..... xxx
Samsrishṭa—what?..... 84
Samvarta cited..... 5
——— age of ..... 301
——— pedigree, &c. of ..... 301
——— Smṛiti—an analysis of ..... 300
Śankara;—the father of Nílakaṇṭha, the author of Vyavahára Mayúkha 1
Śaṅkha, cited .....42, 67, 89, 90
Śaṅkha and Likhita, cited .....40, 71, 151
——————— a story of, in the Mahábhárata ..... 315
Śaṅkha Samhitá—analysis of..... 314
Sántapana—what? ..... 272
Sapiṇḍas—who are? ..... 82

PAGE

Sapiṇḍas succeed to obstructed heritage when ..... 82
——— viewed in relation to succession.....357, 359
——— capable of inheriting, number of ..... 357
——— two groups of ..... 377
——— Mr. Harrington's view of, criticised.....380, 383
Sapiṇḍa relationship—as affecting marriage, an extract from Dharmasindhu, illustrative of..... 347
——————— as affecting marriage, illustrated by tables. 349, 351
——————— arising through a stepmother ... 352
——————— as arising through adoption ..... 353
——————— when not a bar to marriage 353, 355
——————— as causing impurity on account of birth or death..... 356
——————— as affecting succession—notes on some of the decided cases... 386
Sapratibandha-dáya—what is? ..... 37
Śátátapa—works attributed to..... 324
——— Smṛiti—mixed style of..... 325
——— Samhitá—styled as a Karmavipáka ..... 325
——————— analysis of ..... 324
Saudáyika—nature of—impartibility of 69
Saumyakṛichchhra—what? ..... 273
Śaunaka .....52, 54, 58
Seduction of a man by a woman—punishable ..... 152
Self-acquisition—law with regard to. 40, 214, 216
Self-defence—permitted..... 139
Service-contract—breach of .....124—127
Servants—three degrees of..... 125
——— rules affecting, in regard to work ..... 128

PAGE

Servants—damage or loss by, how to be estimated..... 128
——— damages or loss by, when to be made good ..... 129
Śimanta—what ?..... 161
Sins—great, enumerated..... 264
—— equal to great sins—enumerated. 264
—— secondary, enumerated ..... 265
Sinner—penance for intercourse with a. 267
——— gifts not to be received from a . 179
Sister—succession of ..... 81
—— whether capable of inheriting .. 370
Sister's son—a Śúdra should adopt, wherever possible .....53—55
——— can be adopted by a Bráhmaṇa.....54—56
Slandering an unmarried woman, punishable ..... 152
Slaves—enumeration of..... 125
——— punishment for making one a, illegally ..... 125
——— female, to be emancipated when pregnant by the master ..... 125
——— when capable of emancipation and when not ..... 125
Slavery—causes of..... 125
——— all except Bráhmaṇas liable to...125
——— on what condition voidable.126, 127
——— in what cases *void ab initio* ... 127
Smártabhattáchárya—alluded to ..... 31
Smṛitis—origin of ..... xiii
——— number of.....xiii—xiv
——— source of the authority of ..... xii
——— different statements with regard to the number of .....xiv—xx
——— discussion with regard to the respective priorities of, in time ..... xxi—xxv
——— antiquity of ..... xxvi
——— what .....160n.
——— whether the direct productions of their reputed authors ..... 299
——— an analysis of the eighteen 275, 330
——— come after the Sútras ... xxv—xxvi
——— explain each other..... xxvii
Son—not willing to take his share of the heritage ..... 44
—— begotten on a married Śúdrá by a twice-born,—not entitled to a share of immoveable property... 46

PAGE

Son begotten on an unmarried Śúdrá by a twice-born, entitled to maintenance only..... 46
—— begotten on a Dásí by a Śúdrá —treated like a legitimate son... 47
—— born after partition—rights of... 47
—— twelve kinds of ..... 49,.218
—— eldest should not be given in adoption, but may be taken ... 51
—— adoption of, sanctioned by usage. 502
—— only—should neither be given nor taken ..... 57
—— adoption of, upheld by usage.....508
—— legitimate son born after one is taken in adoption ..... 57
—— share of an illegitimate son ..... 220
Sonless separated man—successors to the property of.....76—84, 221
Soul—an exposition of the nature of. 251—262
—— seat of, in the human body ..... 254
—— knowledge of, necessary for attaining final beatitude..... 254
—— how it enters bodies ..... ... 255
—— distinguished as individual and universal ..... 256
—— immortality and independent existence of, reconciled with its combination with inanimate objects 256-257
Śraddhas ..... xxxvi
Śráddha ceremonies—times for the performance of..... 187
——— who are entitled to perform and who not ..... 188
——— mode of performing ...189—192
——— fruits of ..... 192
Śrauta Sutras, a list of..... ix—x
——— a list of commentaries on ..... xi
Śreṇis—justice administered by..... 4
Śruti—what is? .....160n.
—— superior in authority to Smṛitis. xxviii
Stepmother—share of, on partition ... 44
———, sapiṇḍa relationship arising through ..... 352
Stolen property—restoration of, to the proper owner ..... 120
Stridhana ..... 43
——— unchaste wife unworthy of... 79
——— kinds of ..... 91, 92, 223, 225
——— technically so called ..... 93

PAGE

Stridhana—power of women over ..... 94
——— succession to..... 95—99
Student—duties of ..... 178
Study—occasions for cessation from... 180
Śúdra—allowed to have adoption performed with Vedic mantras..... 56
Suit, the first notice of a ..... 6
—— accompanied with a stipulation .. 202
Suitor with an inadmissible claim ..... 15
Śulka ..... 92
Summons—those who are and those who are not subject to..... 7
——— punishment for disobeying... 8
Surety—inadmissible ..... 14
——— who may not be ..... 15
——— separated brother may be ..... 74
——— for the satisfaction of judgment.....14, 102, 108
——— four kinds of ..... 107
——— where principal absconds ..... 107
——— liability of ..... 107
——— when joint and several ..... 108
——— right against principal ..... 108
——— liability of the sons of ..... 108
——— grandsons of, when liable and when not ..... 108
Suretyship—Yájñavalkya on ..... 206
Sútras—distinguished as Grihya and Śrauta ..... ix
——— Dharma or Sámayáchárika ... xii
——— Púrva and Apara..... xiii
——— priority of, to the Smritis, in time ..... xxv—xxvi
Svairiní—what is a? ..... 170
Svayandatta ..... 49
Tantras—a source of Dharmaśástra ... xli
Taptakṛichchhra—what? ..... 272
Theft—a title of judicature..... ... 2, 240
—— three degrees of... ..... 141
—— what..... 141
Thieves—harbouring thieves and their punishment ..... 142
Things unfit to be eaten ..... 183
Thoroughfare—what? ..... 136
Tikákáras—period of ..... xliii
Title of Vyavahára—definition of a ... 2
Title, proof of, of whom required... 22, 201
—— when important as establishing ownership ..... 203
Transgression of compact—what?..129, 230
Transmigration of the soul ..... 256—
——— according to the nature of sins committed.....262—
Treasure trove, how to be disposed of when found .....120,
Trespass by cattle—loss resulting from to be made good by the owner of the cattle .....
——— when exempt from punishment
Tulápurusha—what? .....
Twice-born in the first stage of life—rules for the conduct of ..... 162,
Twins—discussion about seniority among .....
Uddhára—loan without interest.....
Universe, theory of the creation of.255—
Upanayana—when to be performed? ...
——— maximum age for the performance of .....
Upapuránas—number of .....
Usage—as a source of law .....xliv—
Uśanas—cited ..... 113, 133,
——— date of.....
Utsarga, what? .....
——— mode, &c. of .....
——— ceremonials for the Utsarga of a Maṭha .....
——— ceremony in the case of the Utsarga of trees, &c .....
Uttamasáhasa—what? .....
Vaishnava-dharmaśástra—a brief analysis of and remarks on..... 279—
Vánaprastha—duties of .....
Vasishṭha cited.....17—19, 48, 49, 57, 60, 68, 106, 146,
——— four persons of this name...
Vasishthasamhitá—analysis of .....
——— remarks on .....
Vendor—rules affecting .....
Vendee—rules affecting .....
Vedas—divisions of, into Ṛik, Yajush, Sáman, and Atharvan.....
——— the respective Śákhás or subdivisions of .....
—— fruits from the study of.....165—
Vedic Mantras—allowed to be used in adoptions among Śúdras .....
Vidyádhana—nature of .....
——— when impartible .....67—
——— when partible .....

PAGE

ádhana, (see self-acquisition) ..... 67
ges—responsibility of, in certain cases of thefts committed within their precincts ..... 143
nu—*39, 44, 48,* 79, 80, 84, 92, *103, 104,* 112, 114, 126, 128, 137, 140
.nusmṛiti—composition of, and remarks on ..... 279
l transactions..... 204
as ..... xxxiii
ya, what ? ..... 165
ldha as prefixed to the names of Smṛiti writers—meaning of..... xxiii
ldha-Gautama—cited ..... 62
ddha-Gautama Samhitá—analysis of ..... 320, 321
——————remarks on ..... 322
ldha-Hárita-Samhitá—an analysis f..... 284—286
ldha Manu .....128, 129
ldha Śátátapa Smṛiti—remarks on 326
ldhátri Samhitá—contents of, and remarks on ..... 277
sa .....3, 4, 6, 12, 16, 19, 21, 23—25, 30, 44, 46, 66, 67, 69, 71, 93, 103, 105, 106, 108, 112, 118, 121, 123, 134, 137, 142, 143
— works attributed to ..... 311
sa and Veda Vyása ..... 313
sa Samhitá—analysis of .....312, 313
sa Smṛiti—remarks on..... 313
avahára (judicial proceeding)—definition of..... 1
avahárádhyáya..... 201—244
avahárapada, definition of, as given by Yájñavalkya ... 2
——————enumeration of, by Manu ..... 2
avaháramátṛikas (essentials of civil judicature) ..... 2
ges—rate of, when not previously stipulated..... 128
——— cases of dispute about ..... 129
——— non-payment of... ..... 231
dow can adopt without permission of husband .....58, 467
fe not a subject of ownership...35, 36, 37
— succession of, to the property of her husband..... 77

PAGE

Wife (reunited)—succeeds in the absence of other reunited coparceners ..... 89
Wives of collateral sapindas excluded from inheritance ..... 370
Witnesses—order of the examination14, 202
——— of one in number, when inadmissible and when not in boundary disputes .....23, 134
——— evidence of..... 23
——— twelve sorts of ..... 23
——— requisite number of ..... 23
——— qualifications of ..... 24
——— inadmissible ..... 24
——— inadmissible generally, admissible in particular cases. 25
——— rules with regard to the examination of .....27, 28
——— false..... 202
——— punishment for false witnesses ..... 27
——— means of distinguishing false witnesses ..... 27
——— competent and incompetent. 208
——— requisite in boundary disputes ..... 134
Woman, capable of adopting a son ... 57
——— can adopt by the consent of husband..... 57
——— can adopt by the consent of kinsmen, if husband not alive. 57
——— dependence of..... 57
——— enjoyment of, without owner's permission ..... 119
——— (free), how may become slave. 127
——— respect enjoined for ..... 170, 172
——— when to be treated severely ... 171
——— rules for the conduct of..... 172
Writings—kinds of..... 17
——— correctness of, when disputed, how determined ..... 20
——— invalid,..... 20
Yájñavalkya...2—5, 9, 13—15, 19—25, 29, 30, 32, 36, 43, 44, 46—49, 51, 57, 67, 72, 75, 76, 85—87, 91, 92, 102, 103, 105—108 110—114, 116—122, 127 128, 130—134, 136, 138—144, 148—156
——— age of ..... lii

PAGE

Yájñavalkya, remarks on..... xlviii
———— Smṛiti—remarks on.....
li, 157, 159
———— Dharmaśástra .....157—274
Yama ..... 110, 152
Yama, works attributed to ..... 78
—— pedigree, &c. of ..... 206, 20
Yamadharmaśástra—remarks on ..... 29
Yama Smṛiti—date of..... 20
———— remarks on ..... 29

BOMBAY: PRINTED AT THE EDUCATION SOCIETY'S PRESS, BYCULLA.

00049064

Digitized with financial assistance from the
Government of Maharashtra
on 18 July, 2018